PART NUMBER	ITEM ① BODY	ITEM ② CONTACT	ITEM ③ INSULATOR	ITEM ④ ANTI-ROCK RING
134-1019-461	BERYLLIUM COPPER GOLD PL .00005 MIN OVER NICKEL PL .00005 MIN OVER COPPER PL .00005 MIN	BERYLLIUM COPPER GOLD PL .00005 MIN OVER NICKEL PL .00005 MIN OVER COPPER PL .00005 MIN	TEFLON	BERYLLIUM COPPER GOLD PL .00003 MIN OVER NICKEL PL .00005 MIN OVER COPPER PL .00005 MIN

REV	ECO	DATE
1	INITIAL RELEASE	26FEB2019
2	EC-1906003	04JUN2019
3	EC-1908012	29AUG2019

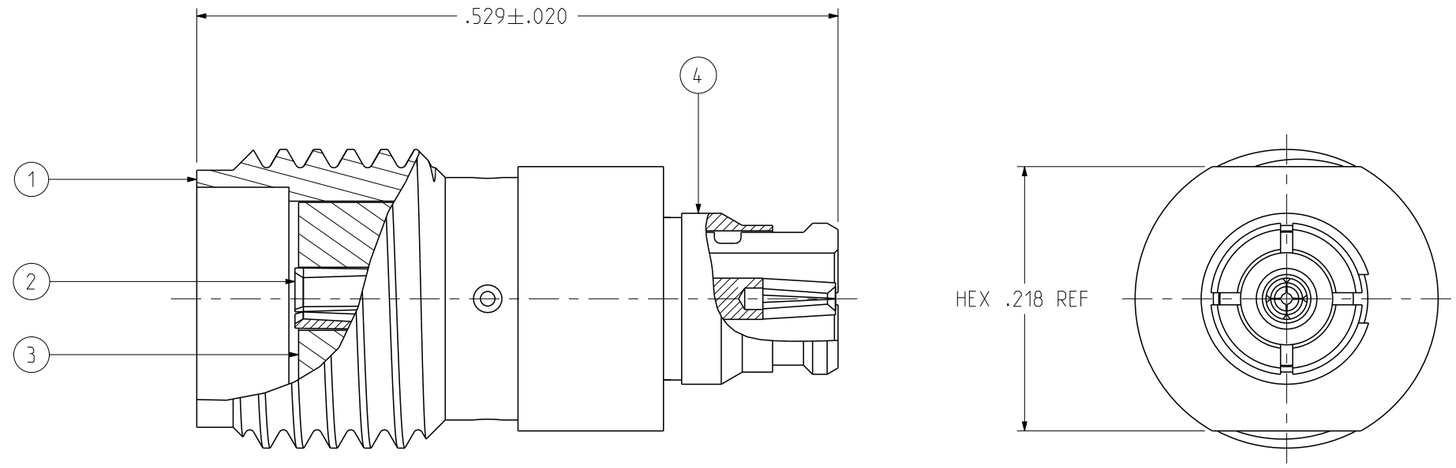

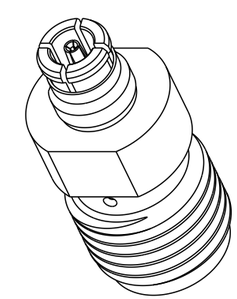

SCALE 4:1

NOTES:

1. ELECTRICAL SPECIFICATIONS:

   1.1 IMPEDANCE: 50 OHMS
   1.2 FREQUENCY RANGE: 0-26.5 GHz
   1.3 VSWR: 1.20 MAX. 0-20 GHz
   1.25 MAX. 20-26.5 GHz
   1.4 WORKING VOLTAGE: 335 VRMS MAX AT SEA LEVEL
   1.5 DIELECTRIC WITHSTANDING VOLTAGE: 1000 VRMS MIN AT SEA LEVEL
   1.6 INSULATION RESISTANCE: 10000 MEGOHM MIN
   1.7 CONTACT RESISTANCE:
   1.7.1 CENTER CONTACT - INTIAL 5 MILLIOHM MAX, AFTER ENVIRONMENTAL 8 MILLIOHM MAX
   1.7.2 OUTER CONDUCTOR - GOLD PLATED INITIAL 1 MILLIOHM MAX, AFTER ENVIRONMENTAL 1.5 MILLIOHM MAX
   1.8 CORONA LEVEL: 250 VOLTS MINIMUM AT 70,000 FEET
   INSERTION LOSS: .1 dB MAX AT 1GHz
   RF LEAKAGE: -50 dB AT 2.5 GHz
   RF HIGH POTENTIAL WITHSTANDING VOLTAGE: 700 VRMS AT 4 AND 7 MHz

2. MECHANICAL SPECIFICATIONS:

   2.1 ENGAGE/DISENGAGE FORCE (SMP): 3.4 LBS MAX ENGAGEMENT
   5 LBS TYPICAL DISENGAGEMENT
   2.2 ENGAGE/DISENGAGE TORQUE (SMA): 2 IN LBS MAX
   2.3 MATING TORQUE (SMA): 7-10 IN LBS MAX
   2.4 CONTACT RETENTION FORCE: 6 LBS MIN
   2.5 DURABILITY: 500 CYCLES MIN

3. ENVIRONMENTAL:
   (MEETS OR EXCEEDS THE APPLICABLE PARAGRAPH OF MIL-PRF-39012)

   3.1 THERMAL SHOCK: MIL-STD-202, METHOD 107, CONDITION B
   3.2 OPERATING TEMPERATURE: -65 °C TO 165 °C
   3.3 CORROSION: MIL-STD-202, METHOD 101, CONDITION B
   3.4 SHOCK: MIL-STD-202, METHOD 213, CONDITION B
   3.5 VIBRATION: MIL-STD-202, METHOD 204, CONDITION B
   3.6 MOISTURE: MIL-STD-202, METHOD 106

cinch CONNECTIVITY SOLUTIONS cinch.com

This PROPRIETARY Document is property of Cinch Connectivity Solutions. It is confidential in nature, non-transferable, and issued with the clear understanding that it is not traced or copied without permission and is returnable upon demand.

INTERPRET DRAWING IN ACCORDANCE WITH ASME Y14.5-2009.

Model No: 134-1019-461/470

RoHS2 ☑ 2011/65/EU

Cage Code

3RD ANGLE PROJECTION

UNLESS OTHERWISE SPECIFIED UNITS: INCH
.XX ±.02
.XXX ±.010
ANGLES ±2°

Drawn by: Roman. Yao

Date: 2/26/2019

JOHNSON

Title: ASSEMBLY, ADAPTER BETWEEN SERIES SMA JACK TO SMP JACK

Drawing No. 134-1019-461/470

REV. 3

Size B

DO NOT SCALE DRAWING

Workmanship Std NONE

Sheet 1 OF 1

Mouser Electronics

Authorized Distributor

Click to View Pricing, Inventory, Delivery & Lifecycle Information:

Cinch Connectivity Solutions:

134-1019-461