Expansion Port

CNT

USER MANUAL

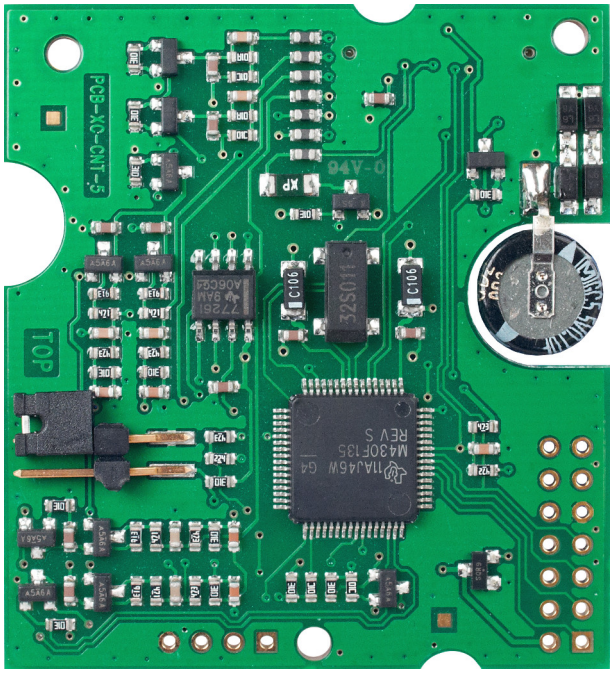

B+B SMARTWORX

Powered by ADVANTECH

Used Symbols

Danger – Information regarding user safety or potential damage to the router.

Attention – Problems that can arise in specific situations.

Information, notice – Useful tips or information of special interest.

GPL Licence

Source codes under GPL licence are available free of charge by sending an email to:

cellularsales@advantech-bb.com.

Advantech B+B SmartWorx s.r.o., Sokolska 71, 562 04 Usti nad Orlici, Czech Republic.
Document No. MAN-0028-EN, revision from November 20, 2017. Released in the Czech Republic.

Contents

1 Safety Instruction **1**

2 Product Disposal Instructions **1**

3 Description of the Expansion Port **2**

3.1 Inputs and Outputs Description 2
3.1.1 Analog Input 2
3.1.2 Binary Input 3
3.1.3 Counter Input 3
3.1.4 Binary Output 3
3.2 Setting the Binary Input Current 3
3.3 Pin-out of the Connector 4
3.4 Configuration of CNT Pinout (Firmware Version) 6
3.5 Description of Protocol XC-CNT MODBUS ASCII Slave 7
3.6 State Indication of CNT Port 14
3.7 Delivery Identification 14
3.8 Technical Specifications 15

4 Recommended Literature **16**

5 Customers Support **17**

5.1 Customer Support for NAM 17
5.2 Customer Support for Europe 17
5.3 Customer Support for Asia 17

List of Figures

1 CNT board – setting the binary input current 4
2 Port connector 4
3 Connection of the router measuring circuits 5
4 User Module XC-CNT FW updater 6
5 Expansion port label 14

List of Tables

1 Pin-out of port connector 4
2 Available firmware versions and the connector pinout 6
3 Adress Space (XC-CNT MODBUS ASCII Slave Protocol) 13
4 State indication 14
5 Delivery identification 14
6 Technical specifications 15

1. Safety Instruction

Please, observe the following instructions:

- The expansion port must be used in compliance with all applicable international and national laws and in compliance with any special restrictions regulating the utilization of the communication module in prescribed applications and environments.
- Use only the original Advantech B+B SmartWorx company accessories. Thus you will prevent possible health risks and damage to the devices and ensure compliance with all relevant provisions. Unauthorised adjustments or use of unapproved accessories may result in damage to the expansion port and breach of applicable laws. Use of unapproved adjustments or accessories may lead to cancellation of guarantee, which has no effects on your legal rights.
- Do not expose the expansion port to extreme conditions. Protect it from dust, moisture and heat.

2. Product Disposal Instructions

The WEEE (Waste Electrical and Electronic Equipment: 2012/19/EU) directive has been introduced to ensure that electrical/electronic products are recycled using the best available recovery techniques to minimize the impact on the environment. This product contains high quality materials and components which can be recycled. At the end of it's life this product MUST NOT be mixed with other commercial waste for disposal. Check the terms and conditions of your supplier for disposal information.

3. Description of the Expansion Port

The user interface CNT is intended for monitoring and processing of analog and binary signals and to control (produce) binary signals. Either 2 counter and 2 binary inputs, or 4 binary inputs, and 2 analog inputs and 1 binary output are available. The settings of binary and counter inputs is done by firmware in which the single inputs and outputs are defined. Firmware can be easily changed in the Web interface of the router via the User Module, see Chapter 3.4. Binary output is off by default (not connected to ground).

It is possible to use power supply management for expansion port CNT installed in the router/modem. When idle, the expansion port CNT is switched to low power supply mode with very low current demanded (100 μA). Time of switching to low power mode is adjustable by program. The module wake up is possible by PORT input state change, too.

3.1 Inputs and Outputs Description

3.1.1 Analog Input

The current detected on analog input is converted to digital 12-bits value. The value is then averaged based on user settings and stored to memory.

How to get the analog input current from CNT board:

The recommended range of input current is 1–24 mA. When lower or higher, a nonlinearity may occur. Input resistance is 100 Ω. The value of input current is:

$$I_{in} = \frac{10 \cdot U_{ref} \cdot D}{4095}[mA],$$

where U_{ref} is 2,5 V (min. 2,4 V, max. 2,6 V) and D is the value from A/D converter. It can be read in the router e.g. with command `io get an1`. For additional information on command `io`, see Application Note *Commands and Scripts for v2 and v3 Routers* [3]. You may increase the accuracy of conversion by adding a constant or multiply with a constant.

The sample period on analog inputs is adjustable in range 0 to 65535 seconds. At value 0 it is sampling once per second and measurement circuit is permanently switched on. When sampling it is possible to set the time of measurement circuit switched on from 16 ms to 375 ms.

The alarm is generated based on the signal change bigger then setting upper/lower value of limit set. The alarm end is based on the bigger/lower signal change then the hysteresis set (upper/lower limit).

3.1.2 Binary Input

The binary input is potential-free contact which is 8x per second sampling and sampling time is 1/64 seconds. For binary inputs it is possible to set active level either logical 0 or logical 1. Chosen active level can generate an alarm.

3.1.3 Counter Input

The counter inputs are measured to 100 Hz maximally. The ratio of input impulses can be maximal 1:10, that means the impulse width mustn't be lower than 1/10 of signal period. At lower width the true evaluation of the measured signal is not guaranteed. For measuring of small frequencies (about mHz) it is important set the multiplicative constant which multiples metering frequency (flow) because of true evaluation.

The alarm is generated based on the signal change bigger than the value set as frequency upper limit.

In case of no change on input, it is possible to define time after which the value on input will be reset.

3.1.4 Binary Output

The binary output is made by transistor with open collector. The transistor is switched off in inactive state (logical 0). In active state (logical 1) the transistor is switched on and connects signal on ground (GND).

Maximal switchable current on output is 100 mA. Maximal voltage which can be on transistor collector is power supply voltage of the router.

The impulse length can be set set in range 125 to 8000 ms which is possible to send on output after number of impulses on input BIN1/CNT1 (configurable 1 to 65535).

In sleep mode the all inputs and outputs values are measured and controlled.

3.2 Setting the Binary Input Current

If active level is set as logical 1, the electric current can be selected with jumper. When jumper J4 (see Figure below) is mounted on pins, electric current value is 20 mA. When jumper J4 is not mounted, electric value is 8 μA. If current value is 20 mA, CNT has higher consumption, but it has higher resistance to industrial noise.

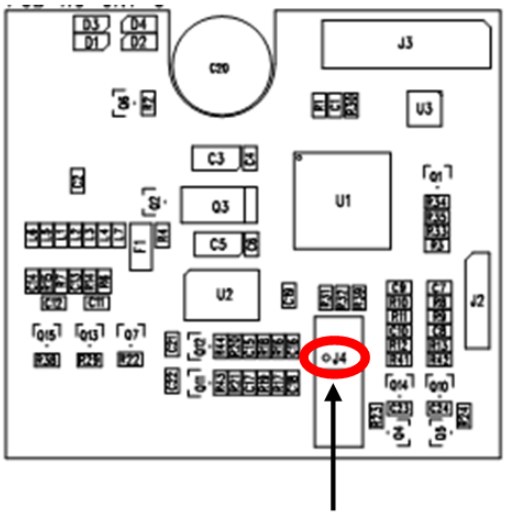

Jumper J4

Figure 1: CNT board – setting the binary input current

3.3 Pin-out of the Connector

Panel socket RJ45.

Pin	Signal	Description	Direction
1	BIN1/CNT1	Binary input/counter input	Input
2	BIN2/CNT2	Binary input/counter input	Input
3	BIN3	Binary input	Input
4	BIN4	Binary input	Input
5	GND	Signal ground	
6	OUT1	Binary output (open collector)	Output
7	AN1	Analogue input	Input
8	AN2	Analogue input	Input

Table 1: Pin-out of port connector

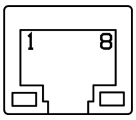

Figure 2: Port connector

The router does not support the modifications of any signals of the CNT port, e.g. logical functions.

Typical connection of the router measuring circuits:

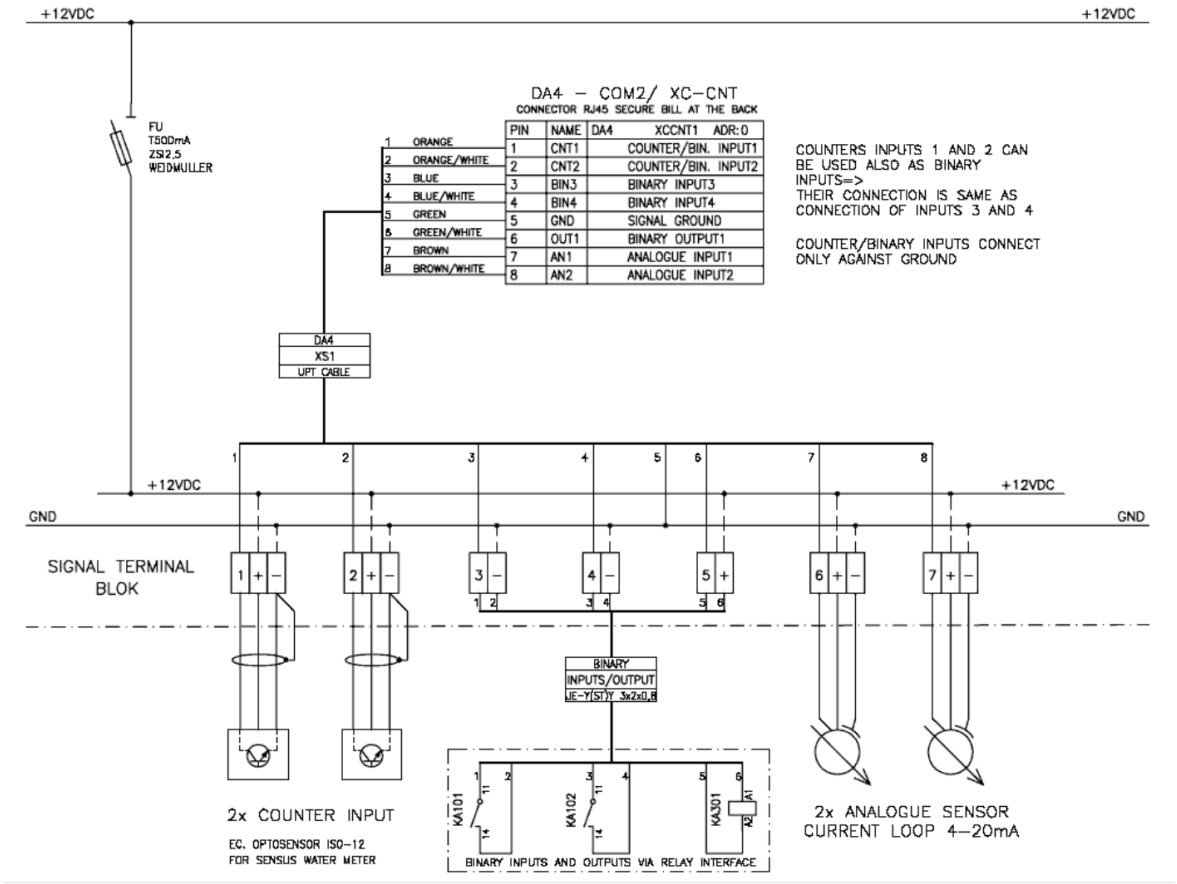

Figure 3: Connection of the router measuring circuits

3.4 Configuration of CNT Pinout (Firmware Version)

Pinout configuration of CNT connector is possible via user module *XC-CNT FW update*. The user module is uploaded to the router with CNT as factory default. It is accessible on *User Modules* page of the router's Web interface. You can choose from firmware versions (pinout configurations) listed in the table bellow. To change the firmware, select it and click the *Update PORT1 (PORT2)* button. It will take a minute to flash the CNT board and progress will be shown. Click *OK* after the process was successful. Note: The *Apply* button alone does not change the firmware (configuration)!

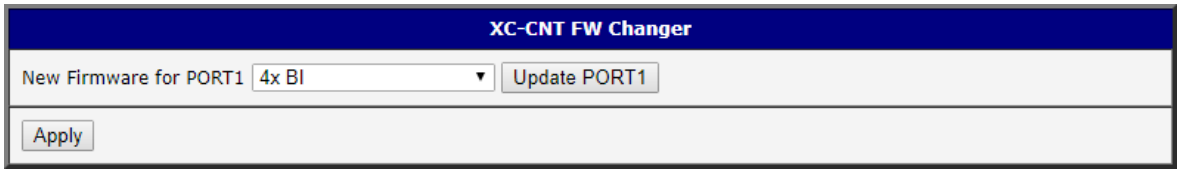

Figure 4: User Module XC-CNT FW updater

Firmware version	Connector Pinout
4x BI	1 – BIN1 – Binary input 2 – BIN2 – Binary input 3 – BIN3 – Binary input 4 – BIN4 – Binary input 5 – GND – Signal ground 6 – OUT1 – Binary output (open collector) 7 – AN1 – Analogue input 8 – AN2 – Analogue input
3x BI + 1x CNT	1 – CNT1 – Counter input 2 – BIN2 – Binary input 3 – BIN3 – Binary input 4 – BIN4 – Binary input 5 – GND – Signal ground 6 – OUT1 – Binary output (open collector) 7 – AN1 – Analogue input 8 – AN2 – Analogue input
2x BI + 2x CNT	1 – CNT1 – Counter input 2 – CNT2 – Counter input 3 – BIN3 – Binary input 4 – BIN4 – Binary input 5 – GND – Signal ground 6 – OUT1 – Binary output (open collector) 7 – AN1 – Analogue input 8 – AN2 – Analogue input

Table 2: Available firmware versions and the connector pinout

3.5 Description of Protocol XC-CNT MODBUS ASCII Slave

The XC-CNT MODBUS ASCII slave protocol is a communication protocol used for communication of the router the CNT board. This protocol enables the configuration of the XC-CNT board's software, reading of its buffer, control of binary output, etc. The expansion port CNT communicates via this protocol with bit rate 9600 bit/s (8N1).

XC-CNT Adress Space:

Adress	Access	Description
0x0000	R/-	Firmware type
0x0001	R/-	Upper 16 bits of firmware version
0x0002	R/-	Lower 16 bits of firmware version
0x0003	R/-	Supports firmware characteristics • bit 0 – analog input AN1 • bit 1 – analog input AN2 • bit 2 – counter input CNT1 • bit 3 – counter input CNT2 • bit 4 – binary input BIN1 • bit 5 – binary input BIN2 • bit 6 – binary input BIN3 • bit 7 – binary input BIN4 • bit 8 – binary output OUT1 • bit 9 – automatic feeder control • bit 10 – fullduplex counter CNT1/CNT2
0x0004	R/-	Maximal logs number in buffer
0x0005	R/W	Marker of log launching and alarms work
0x0006	R/W	Upper 16 bits of seconds number from 1.1.1970
0x0007	R/W	Lower 16 bits of seconds number from 1.1.1970
0x0008	R/W	Upper 16 bits of log actual number
0x0009	R/W	Lower 16 bits of log actual number
0x000A	R/-	Alarms actual status
⋮	⋮	⋮
0x0100	R/-	Binary inputs status
⋮	⋮	⋮

Continued on the next page

Continued from previous page

Adress	Access	Description
0x0200	R/W	Binary outputs status
⋮	⋮	⋮
0x0300	R/-	Recalculate value of analog input AN1 (with sign)
⋮	⋮	⋮
0x0400	R/-	Recalculate value of analog input AN2 (with sign)
⋮	⋮	⋮
0x0500	R/W	Upper 16 bits of counter CNT1 value
0x0501	R/W	Lower 16 bits of counter CNT1 value
0x0502	R/-	Prompt frequency CNT1
0x0503	R/-	Average frequency CNT1
0x0504	R/-	Minimal frequency CNT1
0x0505	R/-	Maximal frequency CNT1
⋮	⋮	⋮
0x0601	R/W	Upper 16 bits of counter CNT2 value
0x0601	R/W	Lower 16 bits of counter CNT2 value
0x0602	R/-	Prompt frequency CNT2
0x0603	R/-	Average frequency CNT2
0x0604	R/-	Minimal frequency CNT2
0x0605	R/-	Maximal frequency CNT2
⋮	⋮	⋮
0x0F00	R/-	0x0000 always
0x0F01	R/-	0x0000 always
0x0F02	R/-	Upper 16 bits of seconds number from 1.1.1970
0x0F03	R/-	Lower 16 bits of seconds number from 1.1.1970

Continued on the next page

Continued from previous page

Adress	Access	Description
0x0F04	R/-	Alarms status • bit 0 – active level on input BIN1 • bit 1 – active level on input BIN2 • bit 2 – active level on input BIN3 • bit 3 – active level on input BIN4 • bit 4 – analoy input lower limit overrun AN1 • bit 5 – analog input upper limit overrun AN1 • bit 6 – analog input lower limit overrun AN2 • bit 7 – analog input upper limit overrun AN2 • bit 8 – limit frequency overrun CNT1 • bit 9 – limit frequency overrun CNT2
0x0F05	R/-	Binary inputs status • bit 0 – level on input BIN1 • bit 1 – level on input BIN2 • bit 2 – level on input BIN3 • bit 3 – level on input BIN4 • bit 6 – level on output BOUT1
0x0F06	R/-	Recalculate AN1 value (with sign)
0x0F07	R/-	Recalculate AN2 value (with sign)
0x0F08	R/-	Upper 16 bits CNT1
0x0F09	R/-	Lower 16 bits CNT1
0x0F0A	R/-	Prompt frequency CNT1
0x0F0B	R/-	Average frequency CNT1
0x0F0C	R/-	Minimal frequency CNT1
0x0F0D	R/-	Maximal frequency CNT1
0x0F0E	R/-	Upper 16 bits of counter CNT2 value
0x0F0F	R/-	Lower 16 bits of counter CNT2 value
0x0F10	R/-	Prompt frequency CNT2
0x0F11	R/-	Average frequency CNT2
0x0F12	R/-	Minimal frequency CNT2
0x0F13	R/-	Maximal frequency CNT2

Continued on the next page

Continued from previous page

Adress	Access	Description
⋮	⋮	⋮
0x1000	R/-	1. log – upper 16 bits of log number
0x1001	R/-	1. log – lower 16 bits of log number
0x1002	R/-	1. log – upper 16 bits of time stamps
0x1003	R/-	1. log – lower 16 bits of time stamps
0x1004	R/-	1. log – alarms status
0x1005	R/-	1. log – binary inputs status
0x1006	R/-	1. log – recalculate value AN1 (with sign)
0x1007	R/-	1. log – recalculate value AN2 (with sign)
0x1008	R/-	1. log – upper 16 bits CNT1
0x1009	R/-	1. log – lower 16 bits CNT1
0x100A	R/-	1. log – prompt frequency CNT1
0x100B	R/-	1. log – average frequency CNT1
0x100C	R/-	1. log – minimal frequency CNT1
0x100D	R/-	1. log – maximal frequency CNT1
0x100E	R/-	1. log – upper 16 bits of counter CNT2 value
0x100F	R/-	1. log – lower 16 bits of counter CNT2 value
0x1010	R/-	1. log – prompt frequency CNT2
0x1011	R/-	1. log – average frequency CNT2
0x1012	R/-	1. log – minimal frequency CNT2
0x1013	R/-	1. log – maximal frequency CNT2
⋮	⋮	⋮
0x1100	R/-	2. log
⋮	⋮	⋮
0x1200	R/-	3. log
⋮	⋮	⋮
0xEF00	R/-	224. log
⋮	⋮	⋮
0xF000	-/W	Samples stores period [min]

Continued on the next page

Continued from previous page

Adress	Access	Description
0xF001	-/W	Allowed: • bit 0 – active level on input BIN1 • bit 1 – active level on input BIN2 • bit 2 – active level on input BIN3 • bit 3 – active level on input BIN4 • bit 4 – analog input AN1 lower limit overrun • bit 5 – analog input AN1 upper limit overrun • bit 6 – analog input AN2 lower limit overrun • bit 7 – analog input AN2 upper limit overrun • bit 8 – limit frequency CNT1 overrun • bit 9 – limit frequency CNT2 overrun
⋮	⋮	⋮
0xF100	-/W	Binary inputs negative logical • bit 0 – input BIN1 • bit 1 – input BIN2 • bit 2 – input BIN3 • bit 3 – input BIN4
⋮	⋮	⋮
0xF200	-/W	Binary outputs normal level
• bit 0 – output OUT1 0xF201	-/W	Feeder – impulse number on input BIN1/CNT1
0xF202	-/W	Feeder – impulse length on output OUT1 [1/8 sec]
⋮	⋮	⋮
0xF300	-/W	AN1 – samples period [sec]
0xF301	-/W	AN1 – multiplicative constant (with sign)
0xF302	-/W	AN1 – additive constant (with sign)
0xF303	-/W	AN1 – hysteresis value (with sign)
0xF304	-/W	AN1 – lower limit (with sign)

Continued on the next page

Continued from previous page

Adress	Access	Description
0xF305	-/W	AN1 – upper limit (with sign)
0xF306	-/W	bits 7-3: AN1 – metering circuit switch time • 0 → 1/64 sec • 1 → 2/64 sec • ... • 30 → 31/64 sec bits 2-0: AN1 – samples number for average • 0 → 1 sample • 1 → 2 samples • 2 → 4 samples • 4 → 8 samples • 5 → 16 samples
⋮	⋮	⋮
0xF400	-/W	AN2 – samples period [sec]
0xF401	-/W	AN2 – multiplicative constant (with sign)
0xF402	-/W	AN2 – additive constant (with sign)
0xF403	-/W	AN2 – hysteresis value (with sign)
0xF404	-/W	AN2 – lower limit (with sign)
0xF405	-/W	AN2 – upper limit (with sign)

Continued on the next page

Continued from previous page

Adress	Access	Description
0xF406	-/W	bits 7-3: AN2 – metering circuit switch time • 0 → 1/64 sec • 1 → 2/64 sec • ... • 30 → 31/64 sec bits 2-0: AN2 – samples number for average • 0 → 1 sample • 1 → 2 samples • 2 → 4 samples • 4 → 8 samples • 5 → 16 samples
⋮	⋮	⋮
0xF500	-/W	CNT1 – multiplicative constant
0xF501	-/W	CNT1 – upper limit
0xF502	-/W	CNT1 – time of limit overrun [sec]
0xF503	-/W	CNT1 – time for metering reset [sec]
⋮	⋮	⋮
0xF600	-/W	CNT2 – multiplicative constant
0xF601	-/W	CNT2 – upper limit
0xF602	-/W	CNT2 – time of limit overrun [sec]
0xF603	-/W	CNT2 – time for metering reset [sec]
⋮	⋮	⋮
0xFFFF	-/W	Switch main supply off on set time [min]

Table 3: Adress Space (XC-CNT MODBUS ASCII Slave Protocol)

3.6 State Indication of CNT Port

LED diode	Description of indication
Green LED	Indicates binary input 0
Yellow LED	Indicates binary input 1

Table 4: State indication

Status indication is supported from 5th revision of boards.

3.7 Delivery Identification

Trade name	Type name	Power supply
XC-CNT	XC-CNT	Internal or external supply

Table 5: Delivery identification

Example of expansion port label:

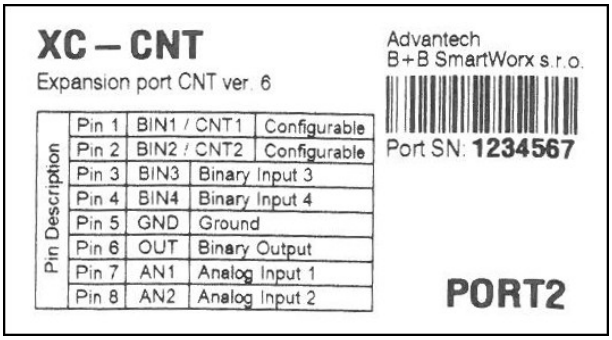

Figure 5: Expansion port label

3.8 Technical Specifications

Expansion port CNT		
Power supply	Internal Sleep Operation	+3,3 V 100 μA (counter is functional) 2 mA
Environment	Operating temperature Storage temperature	-30 to +60 °C -30 to +85 °C
Standards	Emission Immunity Safety Isolation	EN 55022/B ETS 300 342 EN 60950 EN 60747
Inputs/Outputs	2x counter 2x analog inputs 2x binary inputs 1x output (open collector)	Max. 100 Hz, ratio max. 1:10 0 .. 20 mA, Rin 100 Ohms reed contact with J4 – 20mA without J4 – 8μA 30V/100 mA
Others	Voltage resistance Sleeping mode	Permanent Controlled

Table 6: Technical specifications

4. Recommended Literature

[1] Advantech B+B SmartWorx: **Application Note – Expansion Port Mounting for v2 Routers (APP-0001-EN)**

[2] Advantech B+B SmartWorx: **Configuration Manual – Cellular Industrial v2 Routers (MAN-0021-EN)**

[3] Advantech B+B SmartWorx: **Application Note – Commands and Scripts for v2 and v3 Routers (APP-0002-EN)**

5. Customers Support

5.1 Customer Support for NAM

Phone: +1-800-346-3119 (Monday – Friday, 7 a.m. to 5:30 p.m. CST)
Fax: +1-815-433-5109
E-mail: support@advantech-bb.com
Web: www.advantech-bb.com

5.2 Customer Support for Europe

Phone: +353 91 792444
Fax: +353 91 792445
E-mail: techSupport@advantech-bb.com
Web: www.advantech-bb.com

5.3 Customer Support for Asia

Phone: +886-2-2792-7818 #1299 (Monday – Friday, 9 a.m. to 5:30 p.m. UTC+8)
Fax: +886-2-2794-7327
E-mail: icg.support@advantech.com.tw
Web: www.advantech.com

Upkeep-advices:

- During cleaning of the router do not use aggressive chemicals, solvents and abrasive cleaners!

CE Hereby, Advantech B+B SmartWorx s.r.o. company declares that the router (radio equipment) with this expansion port installed is in compliance with EU Directive **2014/53/EU**. The router with this expansion port installed and no radio interface present is in compliance with EU Directives **2014/30/EU** and **2014/35/EU**.

The full text of the EU Declaration of Conformity of the corresponding router is available at the following internet address: www.advantech-bb.cz/eudoc

Mouser Electronics

Authorized Distributor

Click to View Pricing, Inventory, Delivery & Lifecycle Information:

B+B SmartWorx:

B-XC-CNT