Expansion Port

RS485/RS422

USER MANUAL

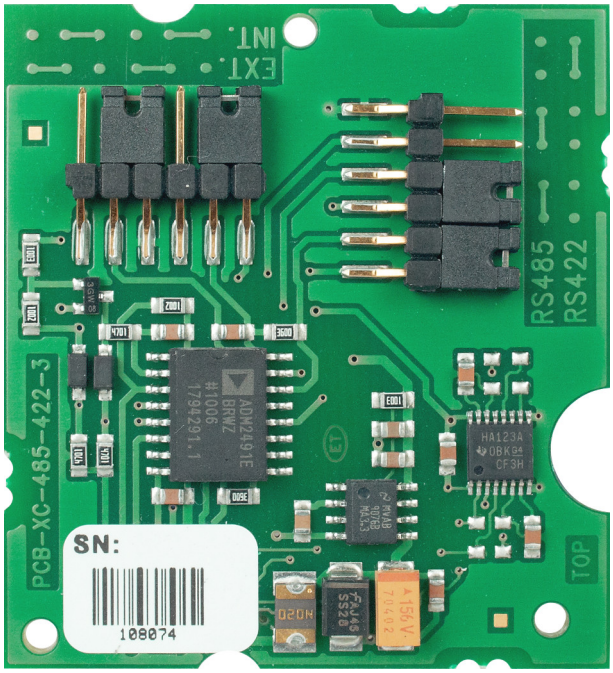

B+B SMARTWORX

Powered by ADVANTECH

Used Symbols

Danger – Information regarding user safety or potential damage to the router.

Attention – Problems that can arise in specific situations.

Information, notice – Useful tips or information of special interest.

GPL Licence

Source codes under GPL licence are available free of charge by sending an email to:

cellularsales@advantech-bb.com.

Advantech B+B SmartWorx s.r.o., Sokolska 71, 562 04 Usti nad Orlici, Czech Republic.
Document No. MAN-0025-EN, revision from June 28, 2017. Released in the Czech Republic.

Contents

1 Safety Instruction **1**

2 Product Disposal Instructions **1**

3 Description of the Expansion Port **2**

4 Choice of Interface and Power Supply **3**

5 Pin-out of the Connector **4**

5.1 Pin-out of RS485 Connector 4
5.2 Pin-out of RS422 Connector 6

6 Technical Parameters **8**

6.1 State Indication 8
6.2 Delivery Identification 8
6.3 Technical Specifications 9

7 Recommended Literature **10**

8 Customers Support **11**

8.1 Customer Support for NAM 11
8.2 Customer Support for Europe 11
8.3 Customer Support for Asia 11

List of Figures

1 Connection of jumpers for external (left) and internal power supply (right) . . . 3
2 Connection of jumpers for RS485 (left)and RS422 (right) 3
3 RS485 connector 4
4 RS485 – Connecting the meter to the router with cable length of <10 m 5
5 RS485 – Connecting the meter to the router with cable length of >10 m 5
6 RS422 connector 6
7 RS422 – Connecting the meter to the router with cable length of <10 m 7
8 RS422 – Connecting the meter to the router with cable length of >10 m 7
9 Expansion port label 8

List of Tables

1 Connection of RS485 connector 4
2 Connection of RS422 connector 6
3 State indication 8
4 Product marking 8
5 Technical specifications 9

1. Safety Instruction

Please, observe the following instructions:

- The expansion port must be used in compliance with all applicable international and national laws and in compliance with any special restrictions regulating the utilization of the communication module in prescribed applications and environments.
- Use only the original Advantech B+B SmartWorx company accessories. Thus you will prevent possible health risks and damage to the devices and ensure compliance with all relevant provisions. Unauthorised adjustments or use of unapproved accessories may result in damage to the expansion port and breach of applicable laws. Use of unapproved adjustments or accessories may lead to cancellation of guarantee, which has no effects on your legal rights.
- Do not expose the expansion port to extreme conditions. Protect it from dust, moisture and heat.

2. Product Disposal Instructions

The WEEE (Waste Electrical and Electronic Equipment: 2012/19/EU) directive has been introduced to ensure that electrical/electronic products are recycled using the best available recovery techniques to minimize the impact on the environment. This product contains high quality materials and components which can be recycled. At the end of it's life this product MUST NOT be mixed with other commercial waste for disposal. Check the terms and conditions of your supplier for disposal information.

3. Description of the Expansion Port

RS485/RS422 expansion port can be fitted to PORT1 and PORT2.

This expansion port is designed as an addition of router's board that allows v2 routers to direct use of additional hardware interfaces for Advantech B+B SmartWorx routers and modems. This interface is physically run into the RJ45 connector of the router or modem.

RS485/RS422 board allows user to use jumpers to select RS422 or RS485 interface. Using jumpers is also possible to select the power supply of the expansion port. A more detailed description of interface choice, respectively choice of external or internal power supply can be found in the next chapter (*4. Choice of interface and power supply*).

4. Choice of Interface and Power Supply

External or internal power supply of expansion port RS485/RS422 port can be selected by plugging jumpers J2 and J3 on the board of this port. If external power supply is required, jumpers J2 and J3 must be connected to pins 1-2. Internal power supply requires linking pins 2-3 on jumper J2 and J3.

The behavior of the port is determined by plugging jumpers J4, J5 and J6. In case the RS485 interface is required, J4 and J5 jumpers must be linked (connected) and J6 jumper must be disconnected. If RS422 interface is required, J4 and J5 jumpers must be disconnected and J6 jumper must be connected. Precise placement of jumpers is shown in figures below.

Internal power supply is recommended to use only in case if it is not possible to ensure external power supply. If internal power supply is selected, RS485/RS422 converter is not galvanically isolated.

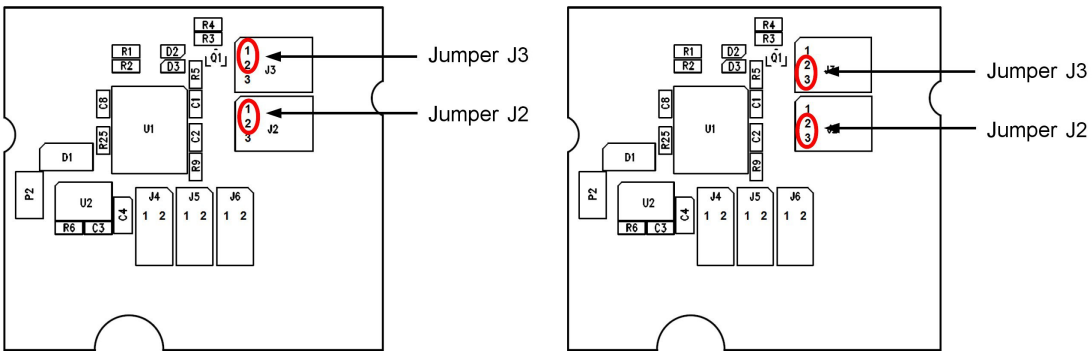

Figure 1: Connection of jumpers for external (left) and internal power supply (right)

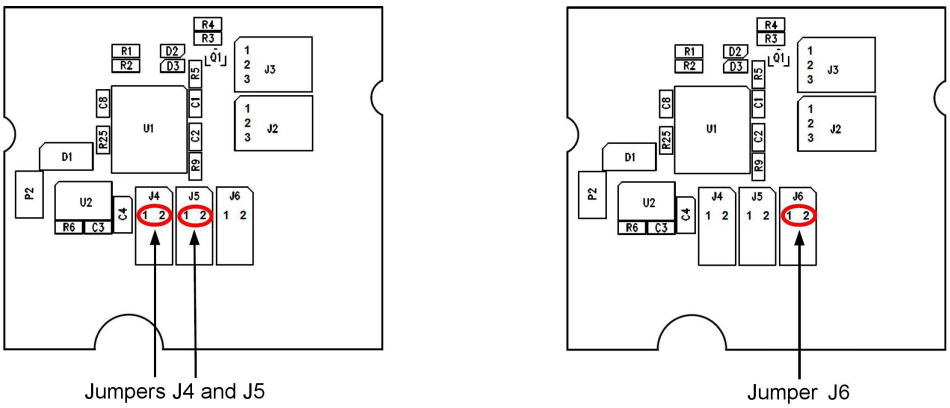

Figure 2: Connection of jumpers for RS485 (left)and RS422 (right)

5. Pin-out of the Connector

5.1 Pin-out of RS485 Connector

Panel socket RJ45.

Pin	Signal mark	Description	Data flow direction
1	GND	Signal and supply ground	
2	GND	Signal and supply ground	
3	TxRx-	RS485 B (-)	Input/Output
4	TxRx+	RS485 A (+)	Input/Output
5	TxRx-	RS485 B (-)	Input/Output
6	TxRx+	RS485 A (+)	Input/Output
7	+12 V EXT	External power supply	
8	+12 V EXT	External power supply	

Table 1: Connection of RS485 connector

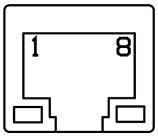

Figure 3: RS485 connector

Important notices:

- **ATTENTION! The way of power supply is selected on the expansion port RS485 using jumper!**
- Signals 3-5 and 4-6 are connected inside of the router.
- If galvanic isolation is required, the converter must be powered by an external power supply (if internal power supply is selected, the converter is not galvanically isolated).

Example of connecting the meter to the router with data cable length of <10 m:

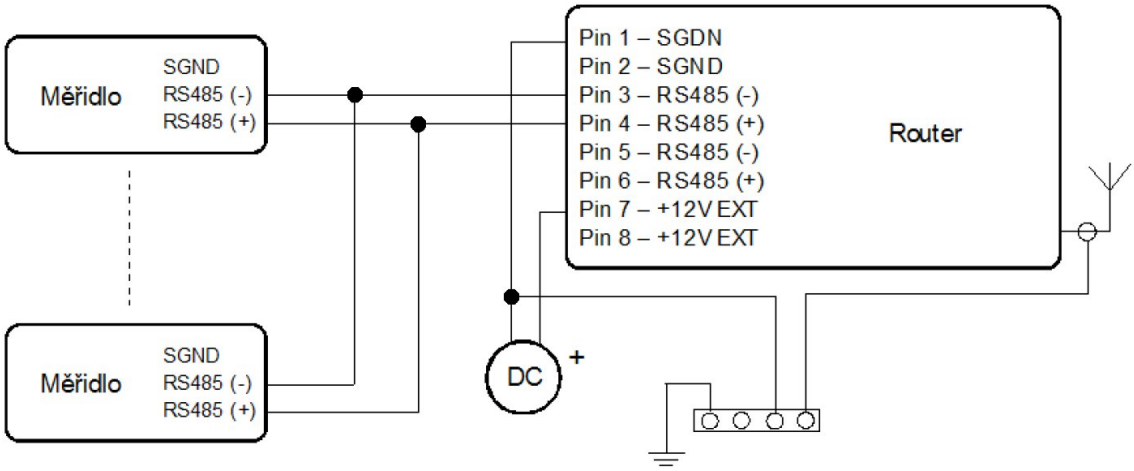

Figure 4: RS485 – Connecting the meter to the router with cable length of <10 m

Example of connecting the meter to the router with data cable length of >10 m:

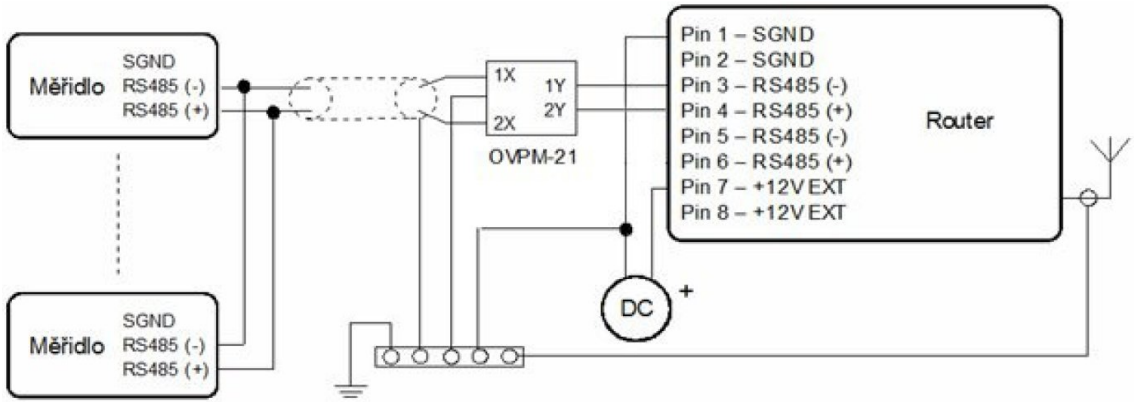

Figure 5: RS485 – Connecting the meter to the router with cable length of >10 m

Note: When the length of the RS485 data cable is over 10 m, it is necessary to use overvoltage protections on the router side.

5.2 Pin-out of RS422 Connector

Panel socket RJ45.

Pin	Signal mark	Description	Data flow direction
1	GND	Signal and power supply ground	
2	GND	Signal and power supply ground	
3	RxD-	Receive data (-)	Output
4	RxD+	Receive data (+)	Output
5	TxD-	Transmit data (-)	Input
6	TxD+	Transmit data (+)	Input
7	+12 V EXT	External power supply	
8	+12 V EXT	External power supply	

Table 2: Connection of RS422 connector

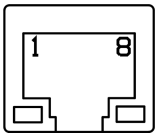

Figure 6: RS422 connector

Important notices:

- **ATTENTION! Way of power supply is selected on the expansion port RS422 using jumper!**
- If galvanic isolation is required, the converter must be powered by an external power supply (if internal power supply is selected, the converter is not galvanically isolated).

Example of connecting the meter to the router with data cable length of <10 m:

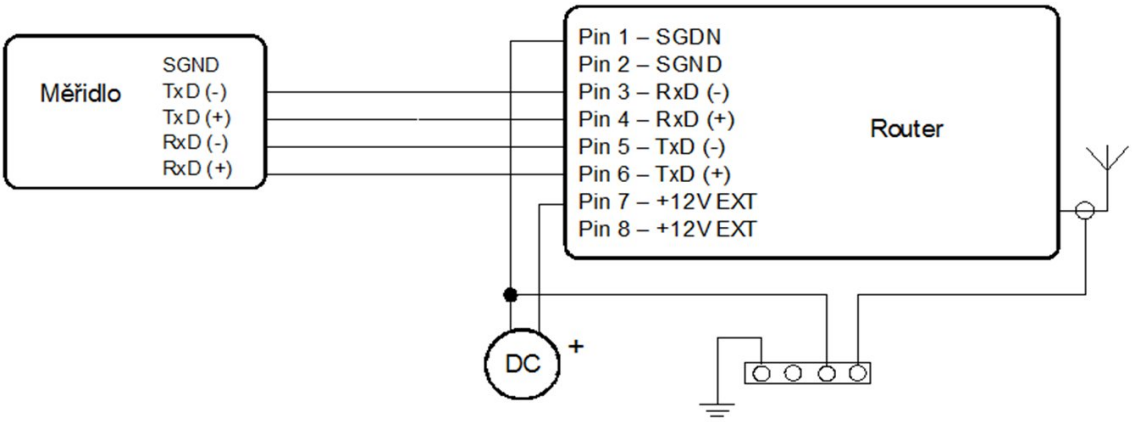

Figure 7: RS422 – Connecting the meter to the router with cable length of <10 m

Example of connecting the meter to the router with data cable length of >10 m:

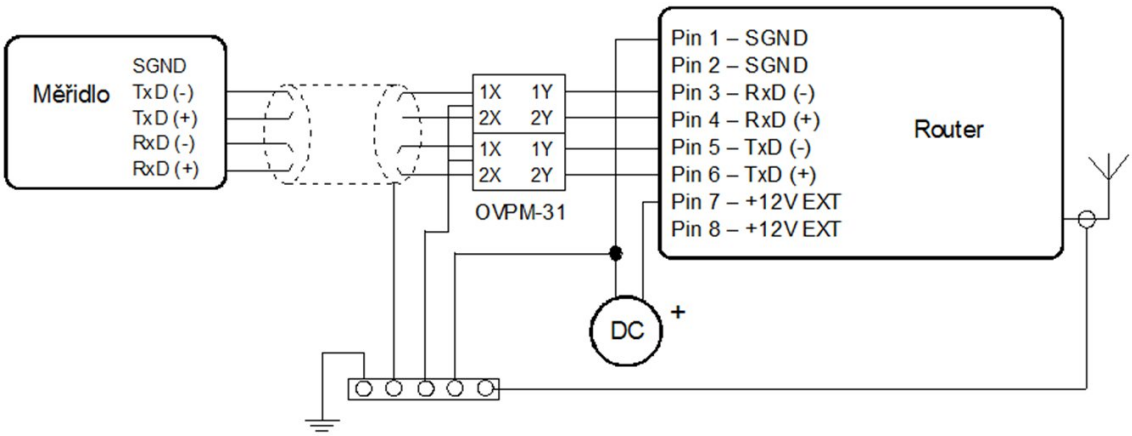

Figure 8: RS422 – Connecting the meter to the router with cable length of >10 m

Note: When the length of the RS422 data cable is over 10 m, it is necessary to use overvoltage protections on the router side.

6. Technical Parameters

6.1 State Indication

LED diodes indications	
Green LED	Indicates receiving data
Yellow LED	Indicates data transmission

Table 3: State indication

State indication is supported from the fourth revision of RS485/RS422 board.

6.2 Delivery Identification

Trade name	Type name	Power supply
XC-RS485/XC-RS422	XC-485-422	Internal/external power supply

Table 4: Product marking

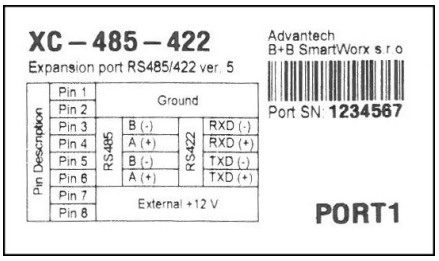

Figure 9: Expansion port label

6.3 Technical Specifications

Expansion port RS485/RS422		
Power supply	External Internal Input power Consumption	+10 – 30 V +3,3 V Max. 1 W Max. 4 mA
Temperature	Operating temperature Storage temperature	-30 °C to +60 °C -30 °C to +85 °C
Standards	Emission Immunity Safety	EN 55022/B ETS 300 342 EN 60950
RS485 specifications (ČSN EN 1434)	Max. number of devices (each 1,5 mA) Maximal bit rate Short circuit resistance Max. cabel length (300 Bd, 200 nF/km)	256 38400 bps permanently 1200 m

Table 5: Technical specifications

7. Recommended Literature

[1] Advantech B+B SmartWorx: **Application Note – Expansion Port Mounting for v2 Routers (APP-0001-EN)**

[2] Advantech B+B SmartWorx: **Configuration Manual – Cellular Industrial v2 Routers (MAN-0021-EN)**

8. Customers Support

8.1 Customer Support for NAM

Phone: +1-800-346-3119 (Monday – Friday, 7 a.m. to 5:30 p.m. CST)
Fax: +1-815-433-5109
E-mail: support@advantech-bb.com
Web: www.advantech-bb.com

8.2 Customer Support for Europe

Phone: +353 91 792444
Fax: +353 91 792445
E-mail: techSupport@advantech-bb.com
Web: www.advantech-bb.com

8.3 Customer Support for Asia

Phone: +886-2-2792-7818 #1299 (Monday – Friday, 9 a.m. to 5:30 p.m. UTC+8)
Fax: +886-2-2794-7327
E-mail: icg.support@advantech.com.tw
Web: www.advantech.com

Upkeep-advices:

- During cleaning of the router do not use aggressive chemicals, solvents and abrasive cleaners!

CE Hereby, Advantech B+B SmartWorx s.r.o. company declares that the router (radio equipment) with this expansion port installed is in compliance with EU Directive **2014/53/EU**. The router with this expansion port installed and no radio interface present is in compliance with EU Directives **2014/30/EU** and **2014/35/EU**.

The full text of the EU Declaration of Conformity of the corresponding router is available at the following internet address: www.advantech-bb.cz/eudoc

Mouser Electronics

Authorized Distributor

Click to View Pricing, Inventory, Delivery & Lifecycle Information:

Advantech:
B-XC-485-422