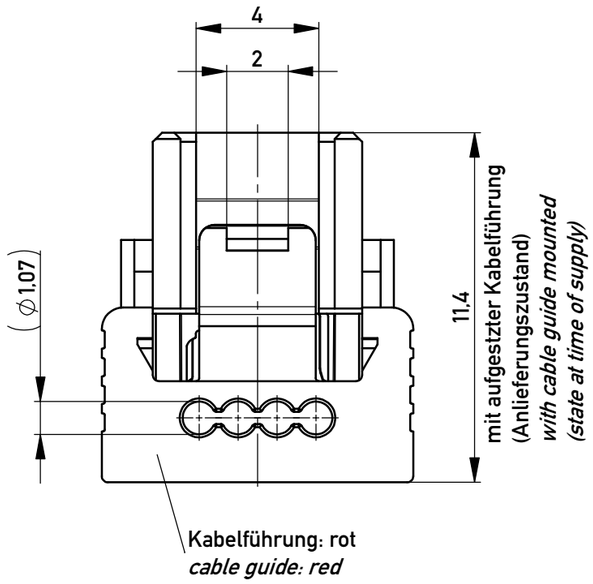

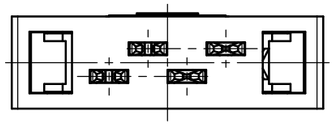

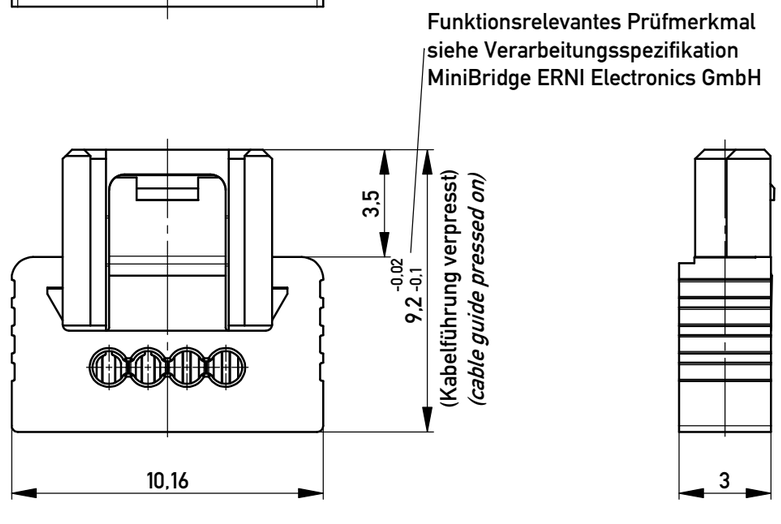

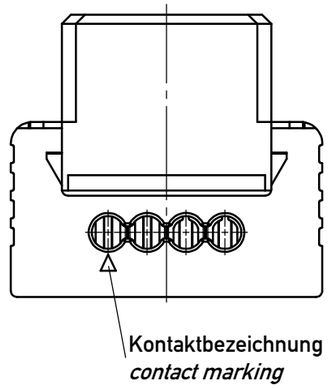

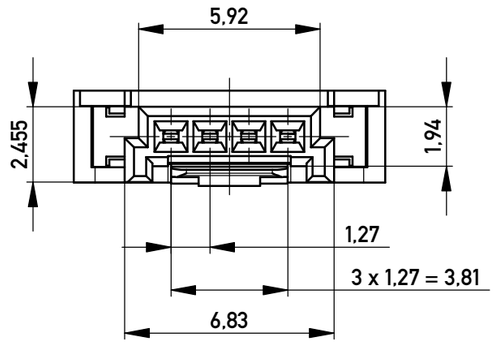

Einzelheit X - *detail X*
M 2:1

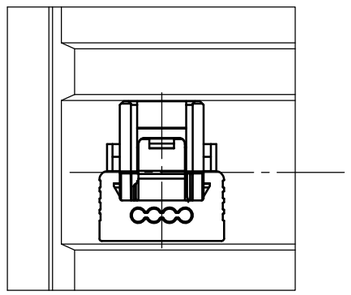

Verpackt in Tray - *tray packaging*
Verpackungseinheit 180 Stück - *packaging unit 180 pcs*

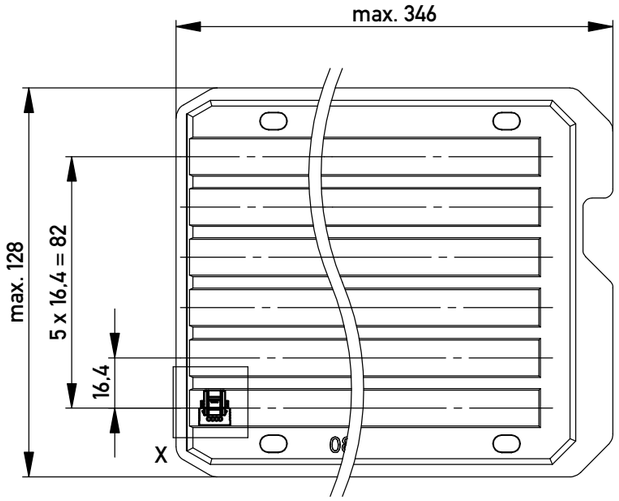

nur mit Hilfsmittel lösbar, für die Anforderung nach PG 9 der LV214 (Koshiri-Sicherheit)

only with tool unlockable, for the requirement of the LV214 PG 9 (Koshiri-security)

Information:	Tolerances	All Dimensions in mm	Scale 5:1
All rights reserved. Only for Information. To ensure that this is the latest version of this drawing, please contact one of the ERNI companies before using.	Subject to modification without prior notice. Drawing will not be updated.		Designation F 1,27 SRC P IDC 04-pin KS d=1,07 AWG 24/26 Positive Lock
		ERNI www.ERNI.com	484657 — I — A3
Index	Date		Class SRCP

Copyright by ERNI Production GmbH & Co. KG
Proprietary notice pursuant to ISO 16016 to be observed.

Mouser Electronics

Authorized Distributor

Click to View Pricing, Inventory, Delivery & Lifecycle Information:

ERNI Electronics:

484657