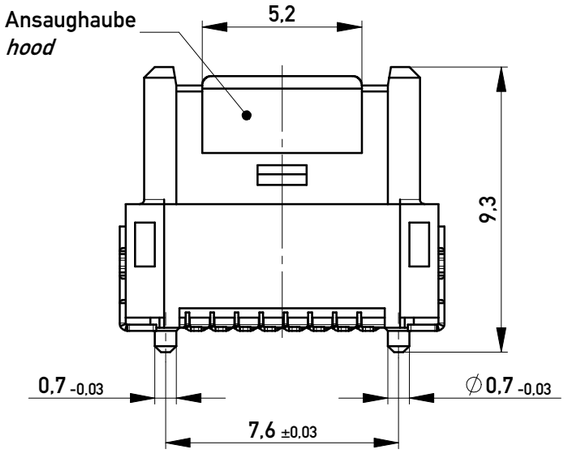

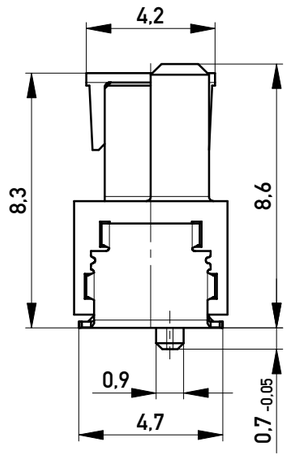

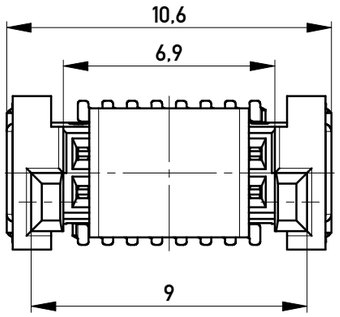

ohne Ansaughaube - *without hood*

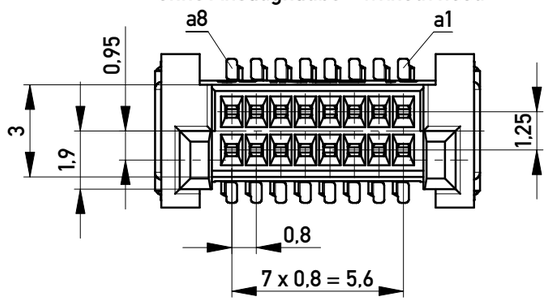

ohne Ansaughaube - *without hood*

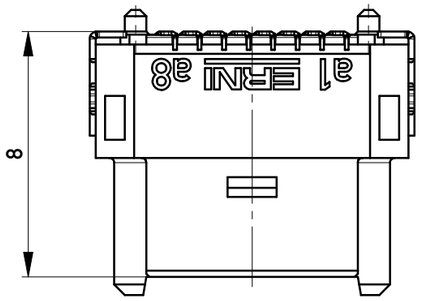

Leiterplatten-Layout Vorschlag für SMT
PCB-Layout Proposal for SMT

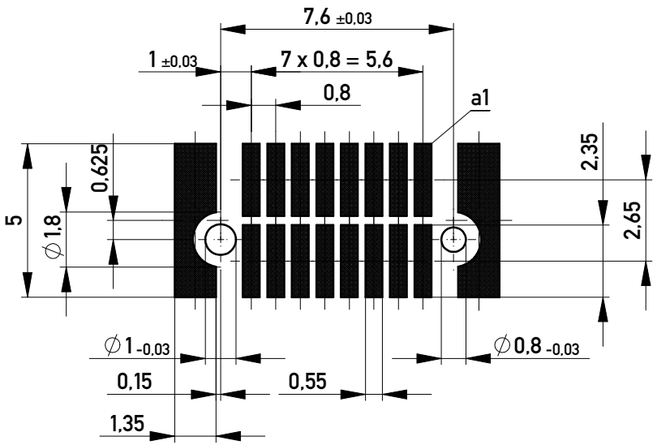

Verpackt im Gurt in Anlehnung an DIN IEC 60286-3
Tape on Reel Packaging according to DIN IEC 60286-3
Verpackungseinheit: 420 Stück
Packaging unit: 420 pcs

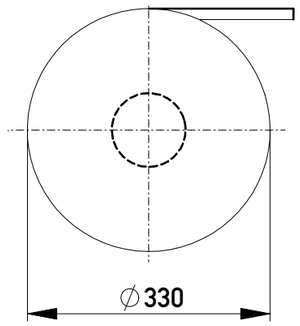

Anforderungsstufe 1
Performance Level 1

Kontaktbereich vergoldet
Mating Area gold plating

Anschlussbereich verzinnt 4-6 µm
Terminal Area 4-6 µm tin plating

Koplanarität der Anschlüsse ≤ 0,1 mm
Coplanarity Area of Termination ≤ 0,1 mm

Abspulrichtung - *Reel off Direction*

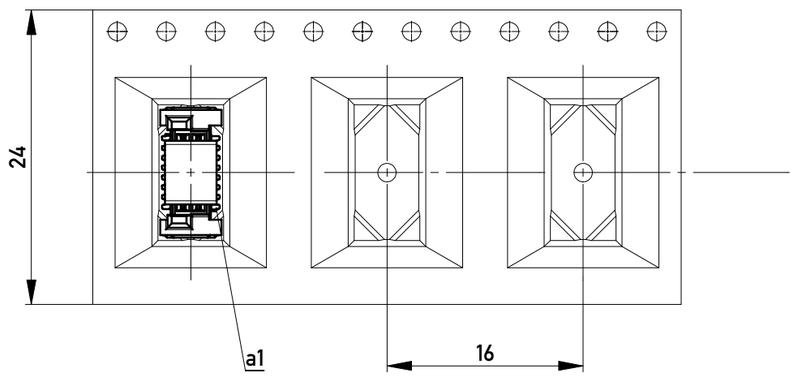

Copyright by ERNI Production GmbH & Co. KG
Proprietary notice pursuant to ISO 16016 to be observed.

Information:	Tolerances	All Dimensions in mm	Scale 5:1
All rights reserved. Only for Information. To ensure that this is the latest version of this drawing, please contact one of the ERNI companies before using.	Subject to modification without prior notice. Drawing will not be updated.		Designation 0,8 DRC-B, F 8mm, 16 polig *0,8 DRC-B, F 8mm, 16 pin*
e / Index	23.06.2016 / Date	www.ERNI.com	454926 — I / A3
			Class DRCB

Mouser Electronics

Authorized Distributor

Click to View Pricing, Inventory, Delivery & Lifecycle Information:

ERNI Electronics:

454926