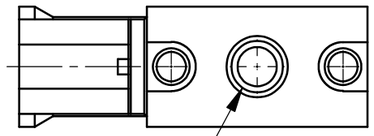

Gewindebohrung 4,5 tief
thread drilling 4,5 deep

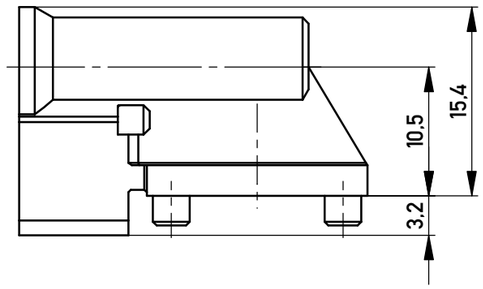

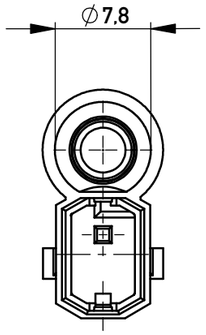

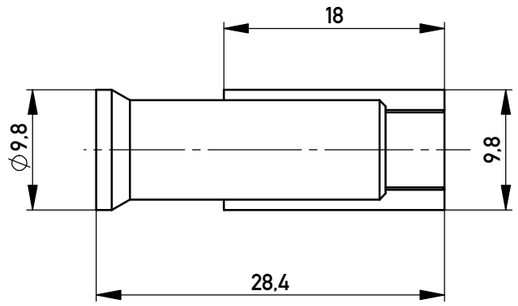

M 1:1

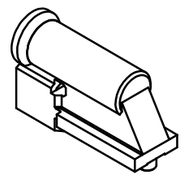

Layout der Tochterkarte *Layout of doughtercard*

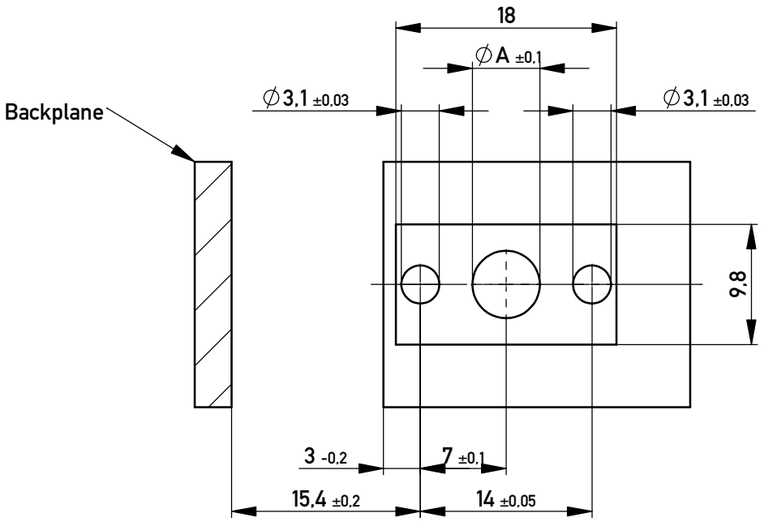

154058	M4	∅ 4,5
134726	M5	∅ 5,5
Ident.-Nr.:	Gewinde	Bohrung A

Information:	Tolerances	All Dimensions in mm	Scale 2:1
All rights reserved. Only for Information. To ensure that this is the latest version of this drawing, please contact one of the ERNI companies before using.	Subject to modification without prior notice. Drawing will not be updated.		Designation **Führungsteil** *Guiding System ERmet*
		ERNI www.ERNI.com	**154075** — I — A3
b — 22.02.2016			
Index — Date			Class ERMEZT

Copyright by ERNI Production GmbH & Co. KG
Proprietary notice pursuant to ISO 16016 to be observed.

Mouser Electronics

Authorized Distributor

Click to View Pricing, Inventory, Delivery & Lifecycle Information:

ERNI Electronics:

154058 134726