Click here to ask an associate for production status of specific part numbers.

Evaluates: MAX32690

MAX32690 Evaluation Kit

General Description

The MAX32690 evaluation kit (EV kit) provides a platform for evaluating the capabilities of the MAX32690 microcontroller, which is an advanced system-on-chip (SoC). It features an Arm® Cortex®-M4F CPU for efficient computation of complex functions and algorithms, and the latest generation Bluetooth® 5 Low Energy (Bluetooth LE) radio designed for wearable and hearable fitness devices, portable and wearable wireless medical devices, industrial sensors/networks, internet of things (IoT), and asset tracking.

MAX32690 EV Kit Contents

- MAX32690 EV Kit Containing a MAX32690 with a Preprogrammed Demo
- Bluetooth Hinged Whip Antenna
- MAX32625PICO Debugger with Cables
- Two USB Standard-A to Micro-B Cables
- Extra Shunts

***Ordering Information* appears at end of data sheet.**

Benefits and Features

- Bluetooth SMA Connector with a Hinged 2.4GHz Whip Antenna
- 3-Pin Terminal Block for CAN Bus 2.0
- Selectable On-Board High-Precision Voltage Reference
- On-Board HyperRAM
- Stereo Audio Codec with Line-In and Line-Out 3.5mm Jacks
- 128 x 128 (1.45in) Color TFT Display
- USB 2.0 Micro-B Interface to the MAX32690
- USB 2.0 Micro-B to Serial UART
- Board Power Provided by either USB Port
- Jumpers to Enable Optional Pull-Up Resistors on I^2C port
- All GPIOs Signals Accessed through 0.1in Headers
- Three Analog Inputs Accessed through 0.1in Headers with Optional Filtering
- SWD 10-Pin Header
- On-Board 3.3V, 1.8V, and 1.1V LDO Regulators
- Individual Power Measurement on All IC Rails through Jumpers
- Two General-Purpose LEDs and One General-Purpose Push Button Switch

Arm and Cortex are registered trademark of Arm Limited (or its subsidiaries) in the US and/or elsewhere.

The Bluetooth word mark and logos are registered trademarks owned by Bluetooth SIG, Inc., and any use of such marks by Analog Devices is under license.

319-100963; Rev 0; 11/22

© 2022 Analog Devices, Inc. All rights reserved. Trademarks and registered trademarks are the property of their respective owners.

MAX32690 EV Kit Board

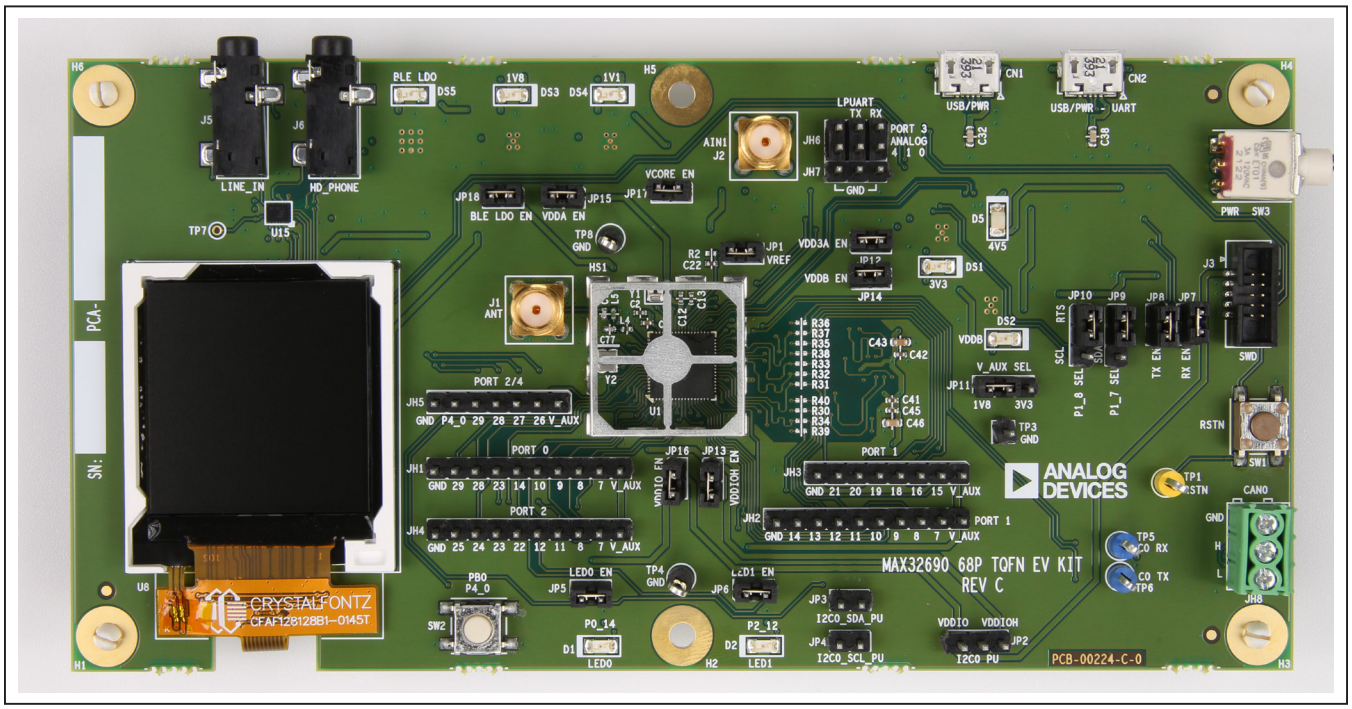

Figure 1. MAX32690 EV Kit–Top–No Shield Cap

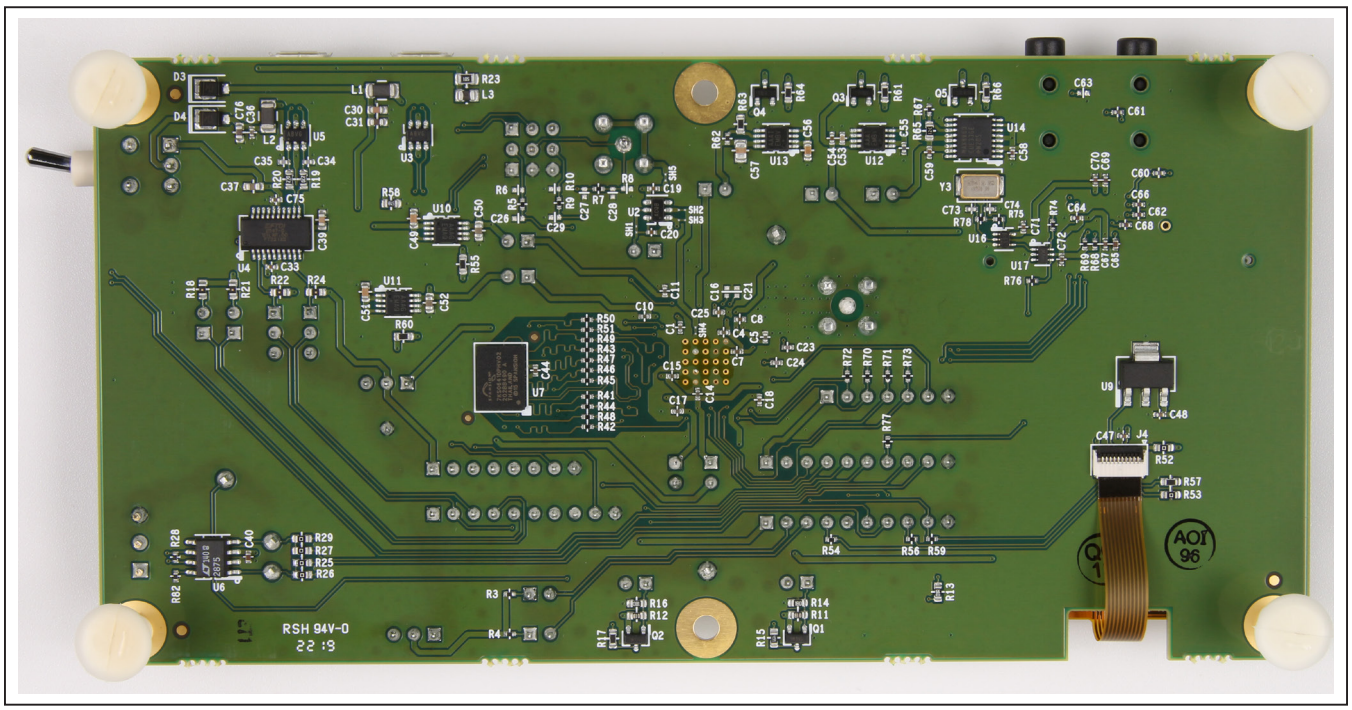

Figure 2. MAX32690 EV Kit–Bottom

Quick Start

Required Equipment

- MAX32690 EV Kit Containing a MAX32690 with a Preprogrammed Demo
- One USB Standard-A to Micro-B Cable

Running the Preprogrammed Demo

The EV kit is fully assembled and tested. Follow the steps below to verify board operation:

1) While observing safe ESD practices, carefully remove the MAX32690 EV kit board out of its packaging. Inspect the board to ensure that no damage occurred during shipment. Shunts are preinstalled prior to testing and packaging.
2) The MAX32690 is preprogrammed with demo code. To run the demo, power up the board by plugging in the provided USB cable to connector CN2. Connect the other end of the USB cable to a computer or power adapter. Verify that the 4V5 blue LED (D5) and the green LEDs 3V3 (DS1), 1V8 (DS3), 1V1 (DS4), and BLE LDO (DS5) LEDs are illuminated, indicating that each of these voltage rails are powered on.
3) Once power is applied to the board, the demo automatically starts and begins flashing LED D1. This indicates that the microcontroller is executing code and the simple demo is running as expected.

Now that you have successfully executed the preprogrammed demo, the next step is to install the **Maxim Micros SDK** to compile/build and run some of the provided examples.

Installing and Running the Maxim Micros SDK

Once the demo runs as expected, the next step is to download and run the **Maxim Micros SDK** installer for your preferred operating system. The **Maxim Micros SDK** contains everything needed to evaluate and develop code for the supported microcontrollers, including: the toolchain, tools, utilities, drivers, documentation, microcontroller firmware, and example code. The **Maxim Micros SDK** installer is located on the EV kit's product webpage. Once the installer runs, the user sees all the toolchain components and microcontroller firmware packages which are installed, unless deselected by the user.

Note: When selecting your target microcontroller, be aware that only the first part number in the sequence is shown (see Figure 3).

For example, **MAX32665 Resources** is the correct selection for either the MAX32665 or the MAX32666. Similarly, **MAX32650 Resources** is the correct selection for either the MAX32650, MAX32651, or the MAX32652.

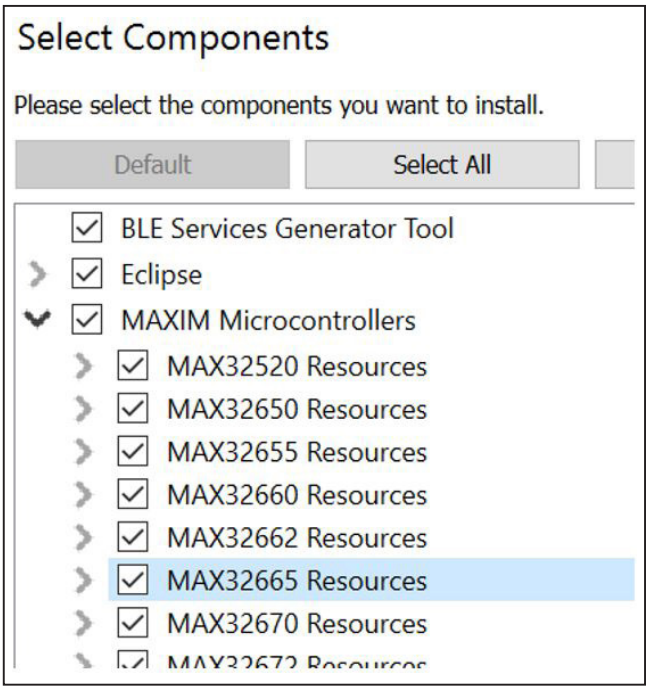

Figure 3. Select Components Window

Once the installation completes, assuming that the default toolchain components are installed, the user can build and run the included examples to exercise various peripherals. The documentation for the SDK is found in the **Documentation** folder located in the installation directory as shown in Figure 4. Find and double-click **index.html** to proceed.

As shown in Figure 5, a Maxim SDK Documentation window then appears, which contains a list of the currently supported devices. Click one of the devices to see the documentation for that microcontroller.

Each microcontroller selection contains toolchain documentation as well as documentation for each of the provided example programs as shown in Figure 6.

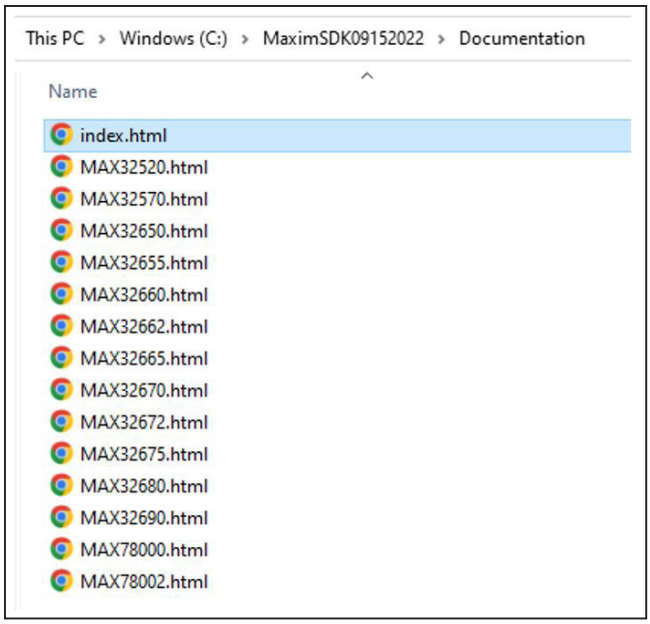

Figure 4. Documentation Folder

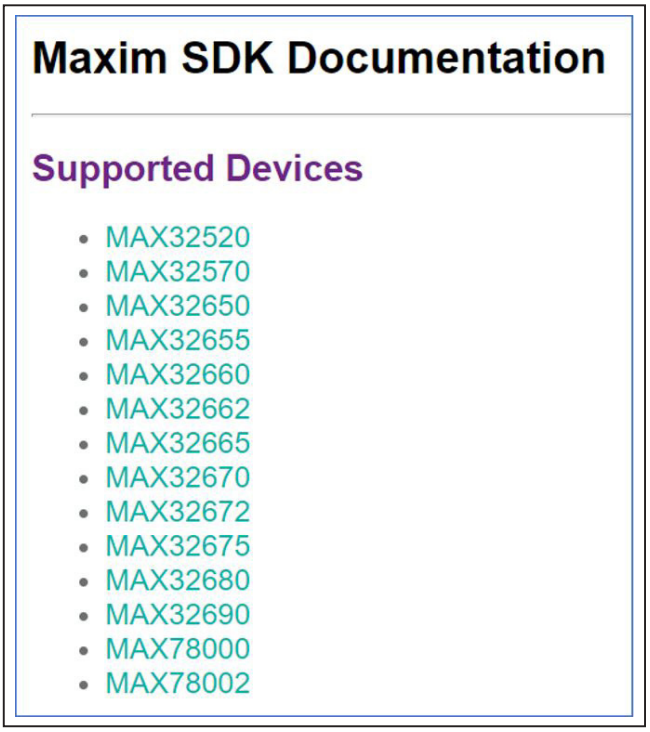

Figure 5. Maxim SDK Documentation Window

Example Applications

The following examples can be found in the Examples/MAX32690 directory of the SDK installation:

- ADC - Analog-to-Digital Converter
- BLE_datc - Bluetooth Data Client
- BLE_dats - Bluetooth Data Server
- BLE_fcc - Bluetooth FCC Testing
- BLE_fit - Bluetooth Fitness
- BLE_FreeRTOS - Bluetooth FreeRTOS
- BLE_mcs - Bluetooth Maxim Custom Profile
- BLE_otac - Bluetooth Over-The-Air Client
- BLE_otas - Bluetooth Over-The-Air Server
- BLE_periph - Bluetooth - advertises as Peripheral
- BLE4_ctr - Bluetooth v4.2 Controller
- BLE5_ctr - Bluetooth v5.2 Controller
- Bootloader
- CAN - Controller Area Network
- CRC - Cyclic Redundancy Check
- CTB_AES - Cryptographic Toobox - Advanced Encryption Standard
- DMA - Direct Memory Access
- Flash - Flash Memory
- Flash_CLI - Flash Memory - Command Line Interface
- FreeRTOSDemo
- GPIO - General Purpose Input/Output
- Hello_World
- I2C - The Standard 2-Wire Serial Protocol
- I2C_SCAN - Scans for Devices on I2C Bus
- I2S - Inter-IC Sound
- ICC - Instruction Cache Controller
- LP - Low Power
- LPCMP - Low Power Comparator
- Pulse_Train
- RTC - Real Time Clock
- RTC_Backup - Real Time Clock Backup
- RV_ARM_Loader - RISCV/ARM Loader
- SPI - Serial Peripheral Interface
- SPIXF - SPI Execute-in-Place Flash
- SPIXR - SPI Execute-in-Place RAM
- TMR - General Purpose Timer
- TRNG - True Random Number Generator
- UART - Universal Asynchronous Receiver/Transmitter
- Watchdog
- WearLeveling
- WUT - Wakeup Timer

Figure 6. Example Applications Window

Launching Eclipse

When launching Eclipse, it is important to avoid browsing the installation folder and running the Eclipse executable directly. Instead, use **eclipse.bat** (Microsoft Windows), **eclipse.sh** (Linux), or **run_eclipse.sh** (MacOS) to launch Eclipse. These scripts properly configure the environment prior to launching Eclipse. For the Microsoft Windows version, use the **Eclipse MaximSDK** shortcut found in the Maxim Integrated SDK folder in the Windows **Start** menu.

MAX32625PICO Debugger

A MAX32625PICO debugger is provided for programming and debugging the target microcontroller through the SWD interface. Furthermore, the MAX32625PICO also serves as a UART bridge, which provides serial terminal functionality without the need of an additional USB cable. For the board configuration details, see the *UART Interfaces* section.

This kit includes a USB cable for connecting the MAX32625PICO debugger to a PC (with Eclipse and the SDK installed) and a ribbon cable for connecting the MAX32625PICO debugger to J3 of the MAX32690 EV kit.

For more detailed information about the MAX32625PICO, refer to the MAX32625PICO data sheet.

Detailed Description of Hardware

Power Supply

The EV kit is powered by +5V through VBUS on either of the USB Micro-B connectors, CN1 or CN2, which source the on-board low dropout (LDO) regulators. When the board is powered from the USB cable through CN2, blue LED 4V5 (D5), and green LEDs 3V3 (DS1), 1V8 (DS3), 1V1 (DS4), and BLE LDO (DS5) illuminate. When powered through CN1, all the LEDs mentioned in addition to green LED VDDB (DS2) illuminate. Power may be applied to the board with the switch (SW3) in either position.

Current Monitoring

Two pin jumpers are provided on all IC power rails for individual current measurements. The jumpers are VDD3A EN (JP12), VDDIOH EN (JP13), VDDB EN (JP14), VDDA EN (JP15), VDDIO EN (JP16), VCORE EN (JP17), and BLE LDO EN (JP18).

Low-Power Current Measurements

To accurately achieve the low-power current values, the EV kit needs to be configured such that no outside influence (that is, pull-ups, external clock, debugger connector, etc.) causes a current source or sink on any GPIO.

For these measurements, the board needs to be configured as follows:

1) Remove shunts at JP1 and JP3 through JP10.
2) Remove resistor R77.
3) Unplug the debugger from the SWD connector.

Bluetooth 5.2 Interface

A SMA connector (J1) is provided to attach the included Bluetooth 2.4GHz hinged whip antenna.

Bluetooth RF Shielding

A metal enclosure (HS1) is provided on the kit for the mitigation of spurious RF emissions from the MAX32690. An enclosure may be necessary for EMC compliance in certain jurisdictions.

CAN Bus 2.0

The 3-screw lug terminal block (JH8) allows for connection to a CAN communications bus through a transceiver LTC2875HS8 (U6).

Color TFT LCD Display

The EV kit provides a color 1.4in 128 x 128 pixel TFT with an integrated TFT controller. Current builds of the EV kit include the Crystalfontz® CFAF128128B1-0145T display. However, due to availability issues, future EV kit builds may include a different display model or vendor.

The selected TFT supports a SPI interface for operating the display. Since the EV kit design assigns the MAX32690's available SPI pins to the Audio Codec, the TFT's SPI pins have been connected to general-purpose IO pins instead. Firmware needs to mimic the required SPI signals on these IO pins by setting, clearing, and reading the IO pins directly (that is, bit-banging). The **Maxim Micros SDK** provides example code that exercises the TFT display.

Audio Interface

The MAX9867 audio codec interfaces to the microcontroller through its I²C and I²S (PCM) ports. Line-in and line-out 3.5mm jacks are provided for audio access. To enable the I2C2C port for the audio codec, jumpers JP9 and JP10 need to be configured in the 2-3 position.

Clocking

The crystals provide a time base for the two internal oscillators. A 32.768kHz crystal (Y1) is the clock source for real-time clock (RTC) operations and a 32MHz crystal (Y2) is the clock source for digital logic and peripherals.

External Voltage Reference (VREF)

The microcontroller's analog-to-digital converter (ADC) selects the internal reference by default. For critical applications, an external precision voltage reference can be connected to the VREF pin. To demonstrate this functionality, this EV kit includes a low-noise, high-precision MAX6071 voltage reference (U2). Its output voltage connects to VREF through the jumper JP1. When attempting to use this external reference, make sure JP1 has a shunt installed. Furthermore, user software needs to properly set the ADC External Reference Select bit. For more details, refer to the ADC chapter in the device user guide.

Serial Wire Debug (SWD)

An Arm debug access port (DAP) provides an external interface for debugging during application development. The DAP is a standard Arm CoreSight™ serial wire debug port and uses a 2-pin serial interface (SWDCLK and SWDIO). Logic levels are set to VDDIO (1V8). Access is through a 10-pin header (J3). In addition, LPUART0B port can be accessed through J3 by installing the proper shunts on JH6. For more details, see the *UART Interfaces* section.

UART Interfaces

A FTDI USB-to-UART bridge IC, FT231X, allows for access to the IC's UART2A port through the USB Micro-B connector, CN2. The USB-to-UART bridge can be connected to the IC's UART2A with the jumpers JP7 (Rx), JP8 (Tx), JP9 (CTS) and JP10 (RTS). Virtual COM port drivers and guides for installing Windows® drivers are available at the FTDI website.

LPUART0B port can be accessed through the SWD 10-pin header (J3) when shunts are installed on JH6 in the 1-2 and 3-4 position. This allows SWD/JTAG debuggers to use one USB cable to provide both SWD/JTAG interfaces as well as serial data interface to a host.

GPIO and Alternate Function Headers

The GPIO and alternate function signals from the microcontroller can be accessed through the headers JH1 to JH6. The IC provides support for both 1.8V and 3.3V peripherals through power rails VDDIO and VDDIOH. The GPIO voltages can be programmed on a pin-by-pin basis. For more details, refer to the microcontroller's user guide.

Analog Header

The three analog inputs can be accessed through the header JH6. It is important to note that this header is unique to support the alternate functionality of these pins. Specifically, pins AIN0 and AIN1 also function as LPUART0B_RX and LPUART0B_TX, respectively. For this reason, header JH6 is also listed in the jumper table. To check how to properly configure JH6 when using LPUART0B instead of the analog inputs, see Table 1.

I²C Access/Pull-Ups

The I2C0A port is accessed through the header JH4. The pull-up resistors are enabled through the jumpers JP3 and JP4. The pull-up voltages of VDDIO or VDDIOH are selected by the jumper JP2.

The I2C2C port is accessed through the header JH2. This I²C bus is also connected to the on-board audio codec. To remove the audio codec from the I2C2C bus, remove the shunts from the 2-3 position of JP9 and JP10. If these shunts are removed, external pull-ups for the I2C2C bus are required.

Reset Push Button

The push button SW1 momentarily pulls the RSTN pin low. The RSTN is internally pulled up to VDDIO. For more details, refer to the EC table for resistance value (R_{PU1} or R_{PU2}) of the IC data sheet.

Indicator LEDs

The general-purpose indicators LED D1 (red) is connected to GPIO P0.14 and LED D2 (green) is connected to GPIO P2.12. These can be completely disconnected from the microcontroller by removing the shunts from JP5 and JP6.

GPIO Push Button Switch

The general-purpose push button (SW2) is connected to GPIO P4.0. If the push button is pressed, the attached port pin is pulled low. It is important to note that P4.0 is also the secure bootloader default stimulus pin. For more details, see the *Secure Communications Protocol Bootloader (SCPBL)* section.

Secure Communications Protocol Bootloader (SCPBL)

The EV kit contains a version of the MAX32690 without the secure bootloader, meaning no SCPBL.

The secure bootloader provides a secure channel for device configuration and program loading. The EV kit hardware can be used to evaluate the secure bootloader enabled versions of the MAX32690 (68-Pin TQFN); however, these devices must be procured separately. For exact part numbers, refer to the Ordering Information table in the device data sheet. To use this kit to evaluate the secure bootloader enabled devices, replace the original MAX32690 with the new devices.

If using secure bootloader enabled devices, the SCPBL is activated by asserting the default stimulus pin (P4.0) by holding down SW2 and momentarily pressing the RSTN button (SW1). The secure bootloader then monitors the USB interface (CN1) for a connection request. If not detected, the LPUART0B interface is then monitored.

Note: To activate the bootloader, the stimulus pin (P4.0), the RSTN pin, and the communication interface pins signals are required.

The stimulus pin is pulled high internally by a weak pull up. If any additional connections are made to the stimulus pin, a stronger external pull up may be required to keep the device out of bootloader mode when powering up or coming out of reset.

For more details, refer to the Secure Communications Protocol Bootloader section of the device user's guide.

Crystalfontz is a registered trademark of Crystalfontz America, Inc.
Arm and CoreSight are registered trademarks of Arm Limited (or its subsidiaries) in the US and/or elsewhere.
Windows is a registered trademark of Microsoft Corporation.

Design Considerations

PCB Layout Considerations

1) Place the 3rd harmonic filter components as close to the RF input of the device for best performance.
2) Keep the antenna as close to the device and shield as possible.
3) The RF input trace must be designed for a coplanar 50ohm characteristic impedance with adjacent layer (layer 2) reference GND plane.
4) A metal enclosure (Shield) to mitigate spurious RF emissions from the microcontroller may be necessary for EMC compliance in certain jurisdictions.
5) Place the two crystals as close to the device as possible.
6) Place decoupling capacitors as close as possible to the device.
7) HyperRAM is a point-to-point routed device. For detailed layout rules, refer to the memory device manufacturer.

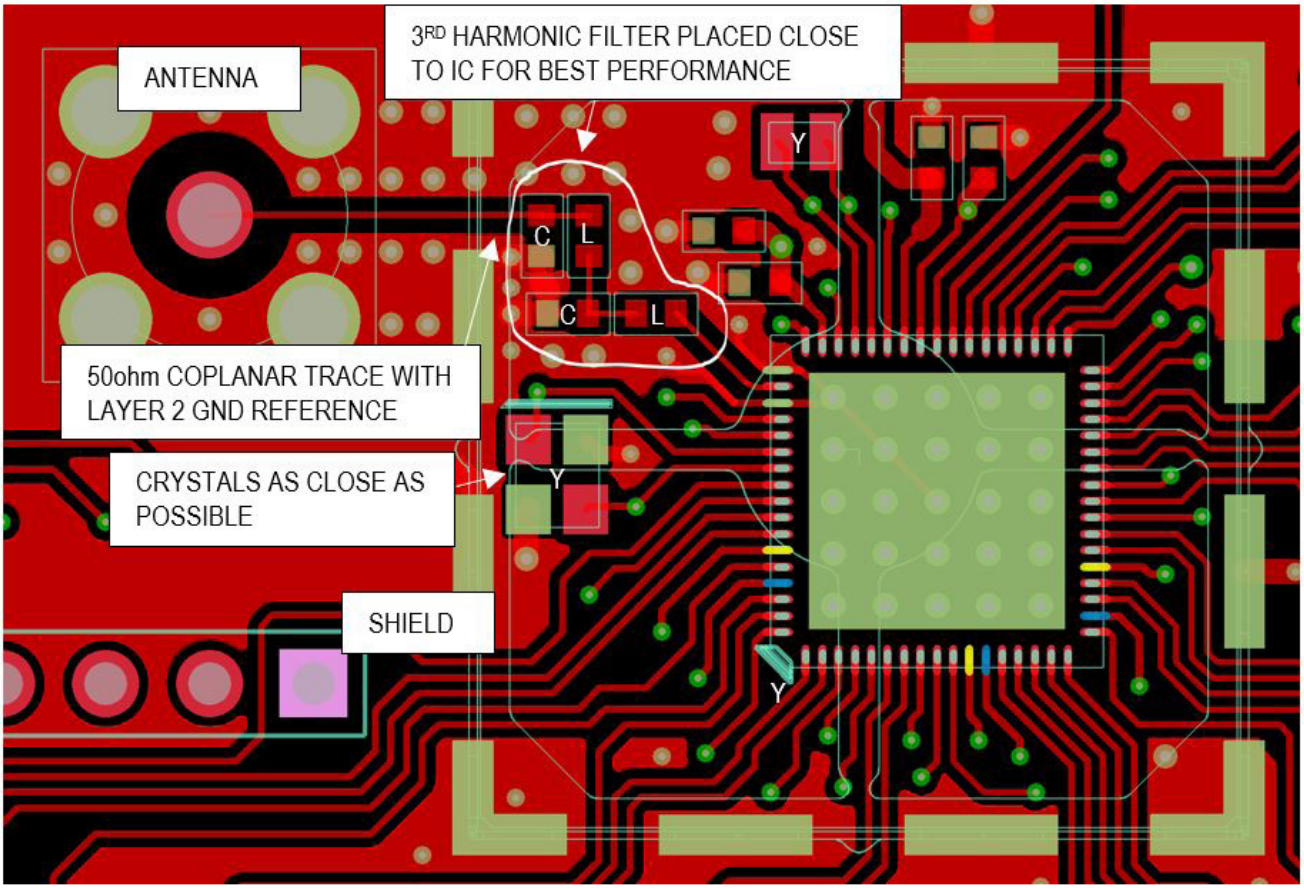

MAX32690 RF PCB Layout—Top Layer

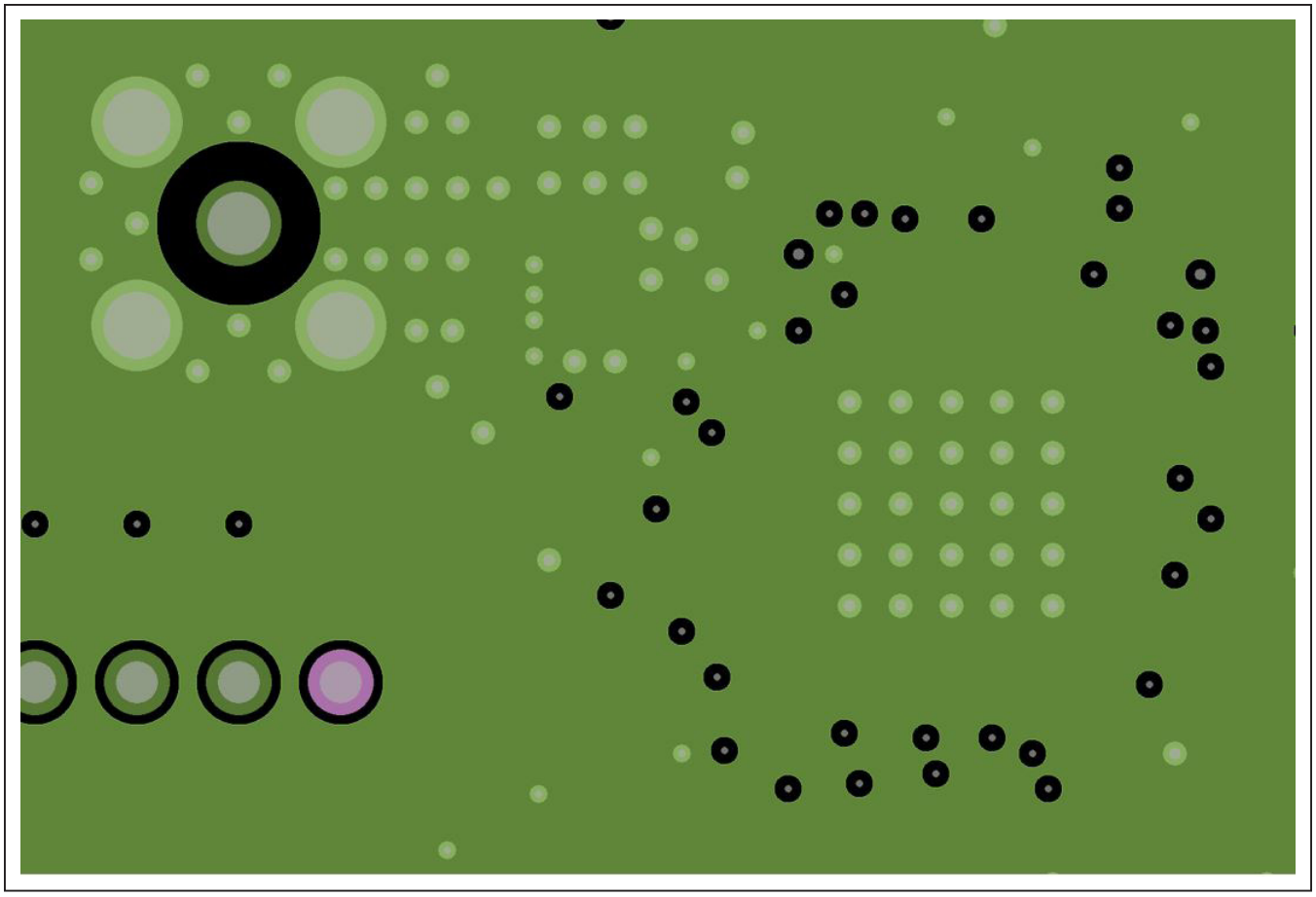

MAX32690 RF PCB Layout—Layer 2 GND

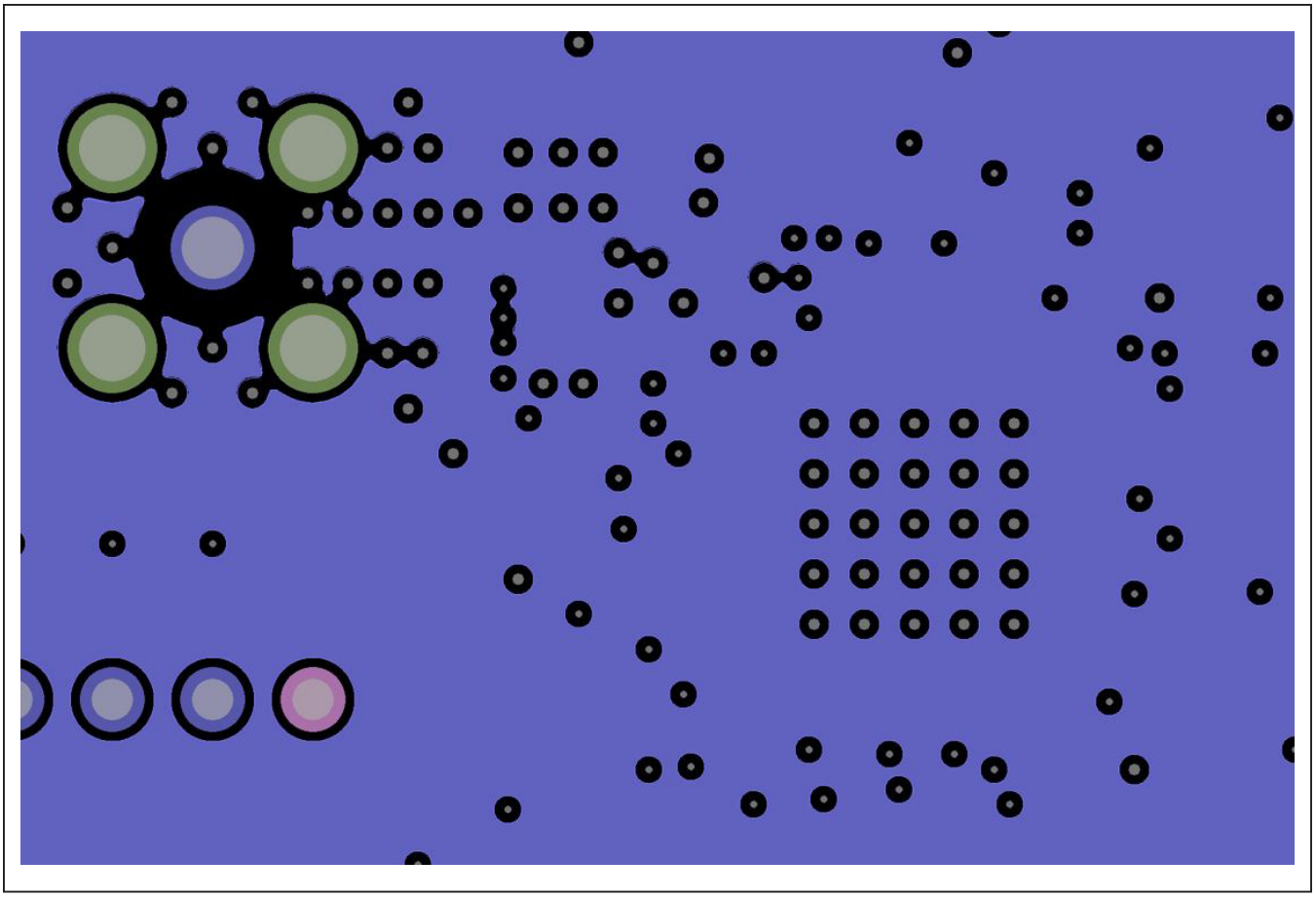

MAX32690 RF PCB Layout—Layer 3 Power Plane

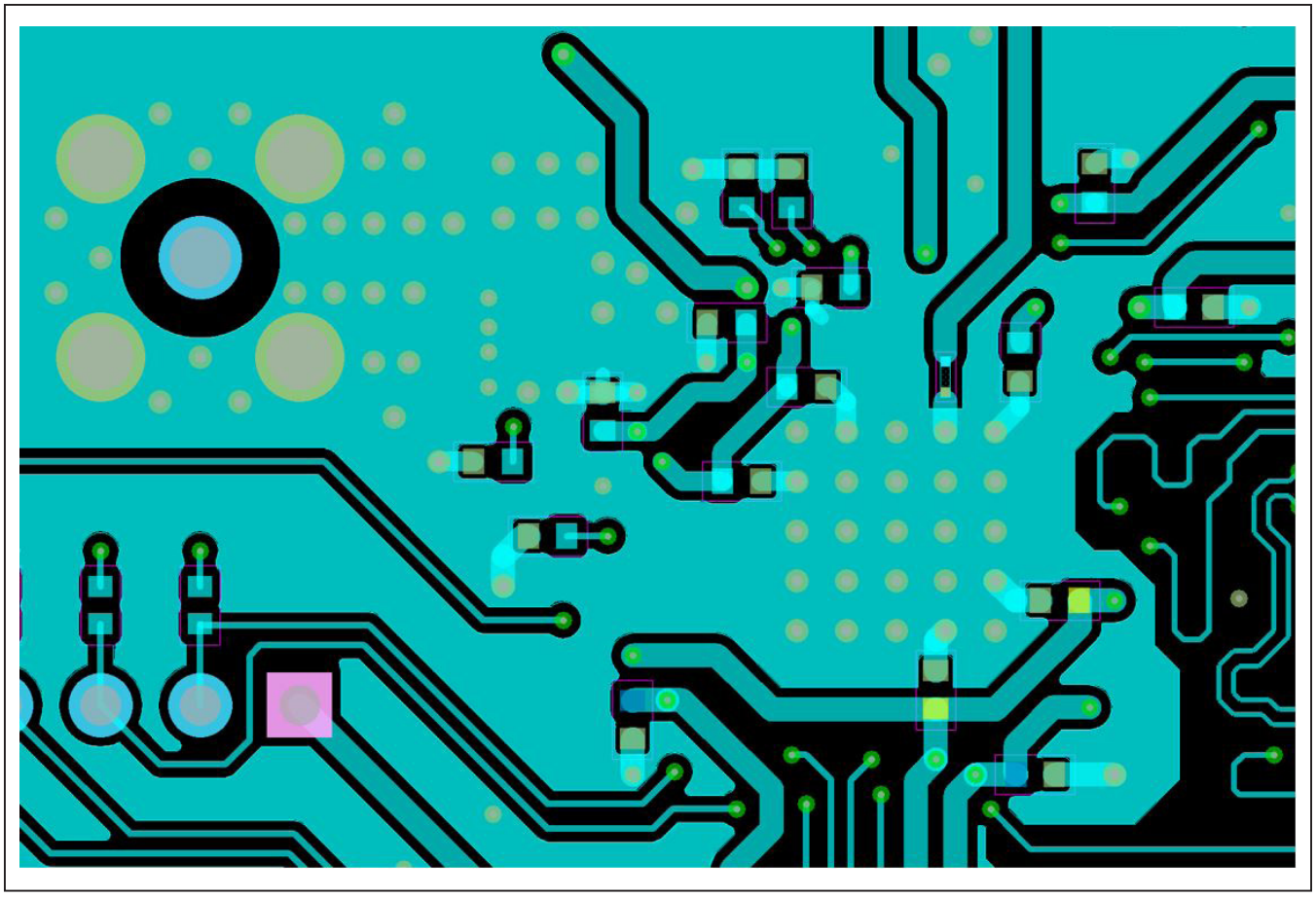

MAX32690 RF PCB Layout—Layer 4 Bottom

Table 1. MAX36290 EV Kit Jumper Settings

JUMPER	NAME	SETIINGS	DESCRIPTION
JP1	VREF	1-2*	Connects external voltage reference to VREF pin, must be enabled in software. For more details, see the *External Voltage Reference (VREF)* section.
		Open	Disconnects external voltage reference.
JP2	I2C0 PU	2-1	Connects VDDIO (1V8) to I2C0 pull-up resistors.
		2-3	Connects VDDIOH (3V3) to I2C0 pull-up resistors.
		Open*	Disconnects power from I2C0 pull-up resistors.
JP3	I2C0_SDA_PU	1-2	Connects pull-up to I2C0A_SDA (P2.7) sourced by I2C0 PU (JP2).
		Open*	Disconnects pull-up from I2C0A_SDA (P2.7) sourced by I2C0 PU (JP2).
JP4	I2C0_SCL_PU	1-2	Connects pull-up to I2C0A_SCL (P2.8) sourced by I2C0 PU (JP2).
		Open*	Disconnects pull-up from I2C0A_SCL (P2.8) sourced by I2C0 PU (JP2).
JP5	LED0 EN	1-2*	Connects red LED D1 to P0.14.
		Open	Disconnects red LED D1 from P0.14.

Table 1. MAX36290 EV Kit Jumper Settings (continued)

JUMPER	NAME	SETIINGS	DESCRIPTION
JP6	LED1 EN	1-2*	Connects green LED D2 to P2.12.
		Open	Disconnects green LED D2 from P2.12.
JP7	RX EN	1-2*	Connects the USB - serial bridge to UART2A_RX (P1.9).
		Open	Disconnects the USB - serial bridge from UART2A_RX (P1.9).
JP8	TX EN	1-2*	Connects the USB - serial bridge to UART2A_TX (P1.10).
		Open	Disconnects the USB - serial bridge from UART2A_TX (P1.10).
JP9	P1_7 SEL	2-1*	Connects the USB - serial bridge to UART2A_CTS (P1.7).
		2-3	Connects I2C2C_SDA (P1.7) to the codec.
JP10	P1_8 SEL	2-1*	Connects the USB - serial bridge to UART2A_RTS (P1.8).
		2-3	Connects I2C2C_SCL (P1.8) to the codec.
JP11	V_AUX SEL	2-1*	Connects V_AUX to 1V8.
		2-3	Connects V_AUX to 3V3.
JP12	VDD3A EN	1-2*	Connects 3V3 to VDD3A.
		Open	Disconnects 3V3 from VDD3A.
JP13	VDDIOH EN	1-2*	Connects 3V3 to VDDIOH.
		Open	Disconnects 3V3 from VDDIOH.
JP14	VDDB EN	1-2*	Connects a 3V3 LDO sourced by USB_VBUS (CN1) to VDDB.
		Open	Disconnects a 3V3 LDO sourced by USB_VBUS (CN1) from VDDB.
JP15	VDDA EN	1-2*	Connects 1V8 to VDDA.
		Open	Disconnects 1V8 from VDDA.
JP16	VDDIO EN	1-2*	Connects 1V8 to VDDIO.
		Open	Disconnects 1V8 from VDDIO.
JP17	VCORE EN	1-2*	Connects 1V1 to VCORE.
		Open	Disconnects 1V1 from VCORE.
JP18	BLE LDO EN	1-2*	Connects 1V4 to BLE_LDO.
		Open	Disconnects 1V4 from BLE_LDO.
JH6	ANALOG PORT3	1-2	Connects LPUART0B_RX (P3.0) to the SWD connector.
		3-4	Connects LPUART0B_TX (P3.1) to the SWD connector.
		Open*	Disconnects LPUART0B_RX (P3.0) and LPUART0B_TX (P3.1) from the SWD connector.

**Default shunt position*

Ordering Information

PART	TYPE
MAX32690EVKIT#	EV Kit

#Denotes RoHS compliant.

MAX32690 EV Kit Bill of Materials

QTY	VALUE	PART REFERENCE	BOM_DESCRIPTION	MANUFACTURER_PN	MANUFACTURER
25	1uF	C1 C2 C4 C5 C10 C11 C12 C13 C14 C15 C17 C18 C22 C55 C58 C59 C60 C61 C62 C64 C66 C67 C68 C69 C70	CAP CER 1UF 16V 10% X5R 0402	GRT155R61C105KE01D	Murata Electronics
2	10uF	C3 C53	CAP CER 10UF 6.3V 20% X5R 0402	GRJ155R60J106ME11D	Murata Electronics
6	100nF	C7 C8 C19 C20 C47 C48	CAP CER 0.1UF 16V 10% X7R 0402	GRM155R71C104KA88D	Murata Electronics
8	DNI	C16 C21 C26 C27 C28 C29 C63 C78	DNI		
2	12pF	C23 C24	CAP CER 12PF 50V 5% NP0 0402	CL05C120JB5NNNC	Samsung Electro-Mech
1	4.7nF	C25	CAP CER 4700PF 50V 5% X7R 0402	GRM155R71H472JA01D	Murata Electronics
1	100nF	C30	CAP CER 0.1UF 25V 10% X8R 0603	C1608X8R1E104K080AA	TDK Corporation
2	1uF	C31 C76	CAP CER 1UF 35V 10% X5R 0603	GMK107BJ105KA-T	Taiyo Yuden
2	10nF	C32 C38	CAP CER 10000PF 25V 10% X7R 0603	CL10B103KA8NNNC	Samsung Electro-Mech
10	100nF	C33 C36 C41 C42 C44 C45 C54 C71 C72 C75	CAP CER 0.1UF 10V 10% X5R 0402	GRM155R61A104KA01D	Murata
2	47pF	C34 C35	CAP CER 47PF 50V 1% NP0 0402	C1005C0G1H470F050BA	TDK Corporation
1	4.7uF	C37	CAP CER 4.7uF 10V 10% X5R 0603	C0603C475K8PACTU	Kemet
1	100nF	C39	CAP CER 0.1uF 16V 10% X7R 0603	C0603C104K4RACTU	Kemet
2	2.2uF	C40 C65	CAP CER 2.2UF 25V 10% X5R 0402	ZRB157R61E225KE11D	Murata Electronics
5	1uF	C43 C46 C49 C51 C56	CAP CER 1uF 16V 10% X7R 0603	GCM188R71C105KA64D	Murata Electronics
2	10uF	C50 C52	CAP CER 10UF 6.3V 20% X5R 0603	CL10A106MQ8NNNC	Samsung Electro-Mech
1	10uF	C57	CAP CER 10UF 10V 10% X7R 0805	CL21B106KPQNNNE	Samsung Electro-Mech
2	18pF	C73 C74	CAP CER 18PF 50V 5% NP0 0402	GRM1555C1H180JA01D	Murata Electronics
1	0.3pF	C77	CAP CER 0.3PF 50V +/-0.1pF C0G/NP0 0402	GJM1555C1HR30BB01D	Murata Electronics
2	MICRO USB B R/A	CN1 CN2	CONN RCPT 5POS MICRO USB B R/A	47346-0001	Molex
1	SMS-255C	CV1	RF SHIELD 0.774" X 0.774" SMD	SMS-255C	Leader Tech Inc.
1	RED	D1	LED 660NM RED WTR CLR 1206 SMD	SML-LX1206SRC-TR	Lumex Opto
6	GRN	D2 DS1 DS2 DS3 DS4 DS5	LED 565NM WTR CLR GREEN 1206 SMD	SML-LX1206GC-TR	Lumex Opto
2	STPS120M	D3 D4	DIODE SCHOTTKY 20V 1A STMITE	STPS120M	STMicroelectronics
1	BLUE	D5	LED 469NM BLUE DIFF 1206 SMD	HSMR-C150	Avago Technologies US
6	DNI	H1 H2 H3 H4 H5 H6	DNI MTG 125DRL 300PAD		
1	SMS-255F	HS1	RF SHIELD 0.75" X 0.75" SMD	SMS-255F	Leader Tech Inc.
2	SMA	J1 J2	CONN SMA JACK STR 50 OHM PCB	901-10112	Amphenol RF
1	10P CORTEX DEBUG	J3	IDC BOX HEADER 0.050 10 POS SMD	3220-10-0300-00	CNC Tech
1	503480-1000	J4	CONN FFC FPC 10POS 0.50MM R/A	503480-1000	Molex, LLC
2	SJ-3523-SMT-TR	J5 J6	CONN JACK STEREO 3.5MM SMD R/A	SJ-3523-SMT-TR	CUI Inc
3	10P 1x10	JH1 JH2 JH4	CONN HEADER .100 SINGL STR 10POS	PEC10SAAN	Sullins
1	8P 1x8	JH3	CONN HEADER .100 SINGL STR 8POS	PEC08SAAN	Sullins
1	7P 1x7	JH5	CONN HEADER .100 SINGL STR 7POS	PEC07SAAN	Sullins
1	6P 2x3	JH6	CONN HEADER .100 DUAL STR 6POS	PEC03DAAN	Sullins
5	3P 3x1	JH7 JP2 JP9 JP10 JP11	CONN HEADER .100 SINGL STR 3POS	PEC03SAAN	Sullins
1	3P 3.5mm	JH8	TERM BLK 3POS SIDE ENT 3.5MM PCB	1984620	Phoenix Contact
14	JUMPER	JP1 JP3 JP4 JP5 JP6 JP7 JP8 JP12 JP13 JP14 JP15 JP16 JP17 JP18	CONN HEADER .100 SINGL STR 2POS (2x1)	PEC02SAAN	Sullins
2	HZ1206C202R-10	L1 L2	FERRITE CHIP SIGNAL 2000 OHM SMD	HZ1206C202R-10	Laird-Signal Integrity
1	BLM21PG221SN1D	L3	FERRITE CHIP 220 OHM 0805	BLM21PG221SN1D	Murata Electronics
1	5.1nH	L4	FIXED IND 5.1NH 800MA 120MOHM SM 0402	LQG15WZ5N1B02D	Murata Electronics
1	5.6nH	L5	FIXED IND 5.6NH 800MA 130MOHM SM 0402	LQG15WZ5N6B02D	Murata Electronics
1	PCB	PCB1			
2	VP2110K1-G	Q1 Q2	MOSFET P-CH 100V 0.12A SOT23-3	VP2110K1-G	Microchip Technology
3	BSS806N	Q3 Q4 Q5	MOSFET N-CH 20V 2.3A SOT23	BSS806N H6327	Infineon Technologies
1	DNI	R2	DNI 0402		
2	2.21K	R3 R4	RES SMD 2.21K OHM 1% 1/10W 0402	ERJ-2RKF2211X	Panasonic Electronics
22	0	R5 R7 R9 R41 R42 R43 R44 R45 R46 R47 R48 R49 R50 R51 R54 R56 R59 R70 R71 R72 R73 R77	RES 0.0 OHM 1/10W JUMP 0402 SMD	ERJ-2GE0R00X	Panasonic Electronics
2	49.9	R6 R10	RES SMD 49.9 OHM 1% 1/10W 0402	ERJ-2RKF49R9X	Panasonic Electronics

MAX32690 EV Kit Bill of Materials (continued)

QTY	VALUE	PART REFERENCE	BOM_DESCRIPTION	MANUFACTURER_PN	MANUFACTURER
1	75	R8	RES 75 OHM 1% 1/10W 0402 SMD	RK73H1ERTTP75R0F	KOA Speer Electronics
2	1K	R11 R12	RES 1K OHM 1/10W 1% 0603 SMD	ERJ-3EKF1001V	Panasonic
1	100	R13	RES SMD 100 OHM 1% 1/10W 0603	RC0603FR-07100RL	Yageo
2	150K	R14 R16	RES 150K OHM 1/10W 1% 0603 SMD	ERJ-3EKF1503V	Panasonic Electronics
1	470	R15	RES 470 OHM 1/10W 1% 0603 SMD	ERJ-3EKF4700V	Panasonic Electronics
6	332	R17 R55 R60 R61 R64 R66	RES 332 OHM 1/10W 1% 0603 SMD	ERJ-3EKF3320V	Panasonic Electronics
4	10K	R18 R21 R22 R24	RES 10K OHM 1/10W 1% 0603 SMD	ERJ-3EKF1002V	Panasonic Electronics
2	27	R19 R20	RES 27 OHM 1/10W 1% 0603 SMD	ERJ-3EKF27R0V	Panasonic Electronics
1	1M	R23	RES SMD 1M OHM 5% 1/8W 0805	ERJ-6GEYJ105V	Panasonic Electronics
2	0	R25 R27	RES SMD 0 OHM JUMPER 1/10W 0603	RC0603JR-070RL	Yageo
4	0	R26 R29 R52 R53	RES SMD 0 OHM JUMPER 1/10W 0603	RC0603JR-070RL	Yageo
1	120	R28	RES SMD 120 OHM 1% 1/10W 0402	ERJ-2RKF1200X	Panasonic Electronics
11	0	R30 R31 R32 R33 R34 R35 R36 R37 R38 R39 R40	RES 0.0 OHM 1/10W JUMP 0402 SMD	ERJ-2GE0R00X	Panasonic Electronics
1	10	R57	RES 10 OHM 1/10W 1% 0603 SMD	ERJ-3EKF10R0V	Panasonic Electronics
1	3.32K	R58	RES 3.32K OHM 1/10W 1% 0603 SMD	ERJ-3EKF3321V	Panasonic Electronics
1	18.7K	R62	RES SMD 18.7K OHM 1% 1/10W 0402	ERJ-2RKF1872X	Panasonic Electronics
1	49.9K	R63	RES 49.9K OHM 1/10W 1% 0603 SMD	ERJ-3EKF4992V	Panasonic Electronics
1	19.6K	R65	RES SMD 19.6K OHM 1% 1/10W 0603	ERJ-3EKF1962V	Panasonic Electronics
1	26.1K	R67	RES SMD 26.1K OHM 1% 1/10W 0402	ERJ-2RKF2612X	Panasonic Electronics
3	10K	R68 R69 R82	RES SMD 10K OHM 1% 1/16W 0402	RC0402FR-0710KL	Yageo
2	33.2	R74 R76	RES SMD 33.2 OHM 1% 1/10W 0402	ERJ-2RKF33R2X	Panasonic Electronics
1	150	R75	RES SMD 150 OHM 1% 1/10W 0402	ERJ-2RKF1500X	Panasonic Electronics
1	1M	R78	RES SMD 1M OHM 1% 1/10W 0402	ERJ-2RKF1004X	Panasonic Electronics
5	DNI	SH1 SH2 SH3 SH4 SH5	DNI 2 NET SHORT		
1	B3S-1002 BY OMZ	SW1	SWITCH TACTILE SPST-NO 0.05A 24V	B3S-1002 BY OMZ	Omron Electronics
1	B3S-1000P	SW2	SWITCH TACTILE SPST-NO 0.05A 24V	B3S-1000P	Omron Electronics
1	SPDT 3A	SW3	SWITCH TOGGLE SPDT 3A 120V	ET01MD1AGE	C&K Components
1	YLW	TP1	TEST POINT PC MULTI PURPOSE YEL	5014	Keystone Electronics
1	1P	TP3	CONN HEADER .100 SINGL STR 1POS	PEC01SAAN	Sullins
2	BLK	TP4 TP8	TEST POINT PC MULTI PURPOSE BLK	5011	Keystone Electronics
2	BLUE	TP5 TP6	TEST POINT PC MULTI PURPOSE BLUE	5127	Keystone Electronics
1	DNI	TP7	DNI 28 DRILL 50 PAD		
1	MAX32690GTK+	U1	MAX32690GTK+ 68P QFN	MAX32690GTK+	Analog Devices Inc.
1	MAX6071AAUT21+T	U2	IC VREF SERIES 0.04% SOT23-6	MAX6071AAUT21+T	Maxim Integrated
2	MAX3207EAUT+T	U3 U5	ESD PROT DIFF SOT23-6	MAX3207EAUT+T	Maxim Integrated
1	FT231XS-R	U4	IC USB SERIAL FULL UART 20SSOP	FT231XS-R	FTDI
1	LTC2875HS8#PBF	U6	IC TRANSCEIVER - CANbus 1/1 8SO	LTC2875HS8#PBF	Analog Devices Inc.
1	S27KS0641DPBHV020	U7	IC HYPERRAM 64Mb 24BGA 166MHz		Cypress Semiconductor
1	CFAF128128B1-0145T	U8	LCD TFT Full Color 1.45" 128x128	CFAF128128B1-0145T	Crystalfontz
1	DS1233AZ-10+T&R	U9	IC SUPERVISOR 1 CHANNEL SOT223-3	DS1233AZ-10+T&R	Maxim Integrate
2	MAX1806EUA33+	U10 U11	IC REG LDO 3.3V/ADJ 0.5A 8UMAX	MAX1806EUA33+	Maxim Integrated
2	MAX1806EUA18+	U12 U13	Low Dropout Linear Regulator	MAX1806EUA18+	Maxim Integrated
1	MAX8869EUE33	U14	REG LDO 3.3V/ADJ 16TSSOP-EP	MAX8869EUE33+	Maxim Integrated
1	MAX9867EWV+T	U15	IC STEREO AUD CODEC LP 30WLP	MAX9867EWV+T	Analog Devices Inc.
1	SN74LVC1GU04DCKT	U16	IC SINGLE INVERTER GATE SC70-5	SN74LVC1GU04DCKT	Texas Instruments
1	NC7WZ17P6X	U17	IC BUFF DL SCHMT TRIG UHS SC706	NC7WZ17P6X	Fairchild Semiconductor
1	32.7680 KHZ	Y1	CRYSTAL 32.7680KHZ 6PF SMD	ECS-.327-6-16R-TR	ECS Inc.
1	32 MHZ	Y2	CRYSTAL 32.00 MHZ 12PF SMD	FA-20H 32.0000MF12Y-W3	EPSON
1	12.288Mhz	Y3	CRYSTAL 12.2880MHZ 18PF SMD	ABM3-12.288MHZ-B4Y-T	Abracon Corporation

MAX32690 EV Kit Schematic Diagrams

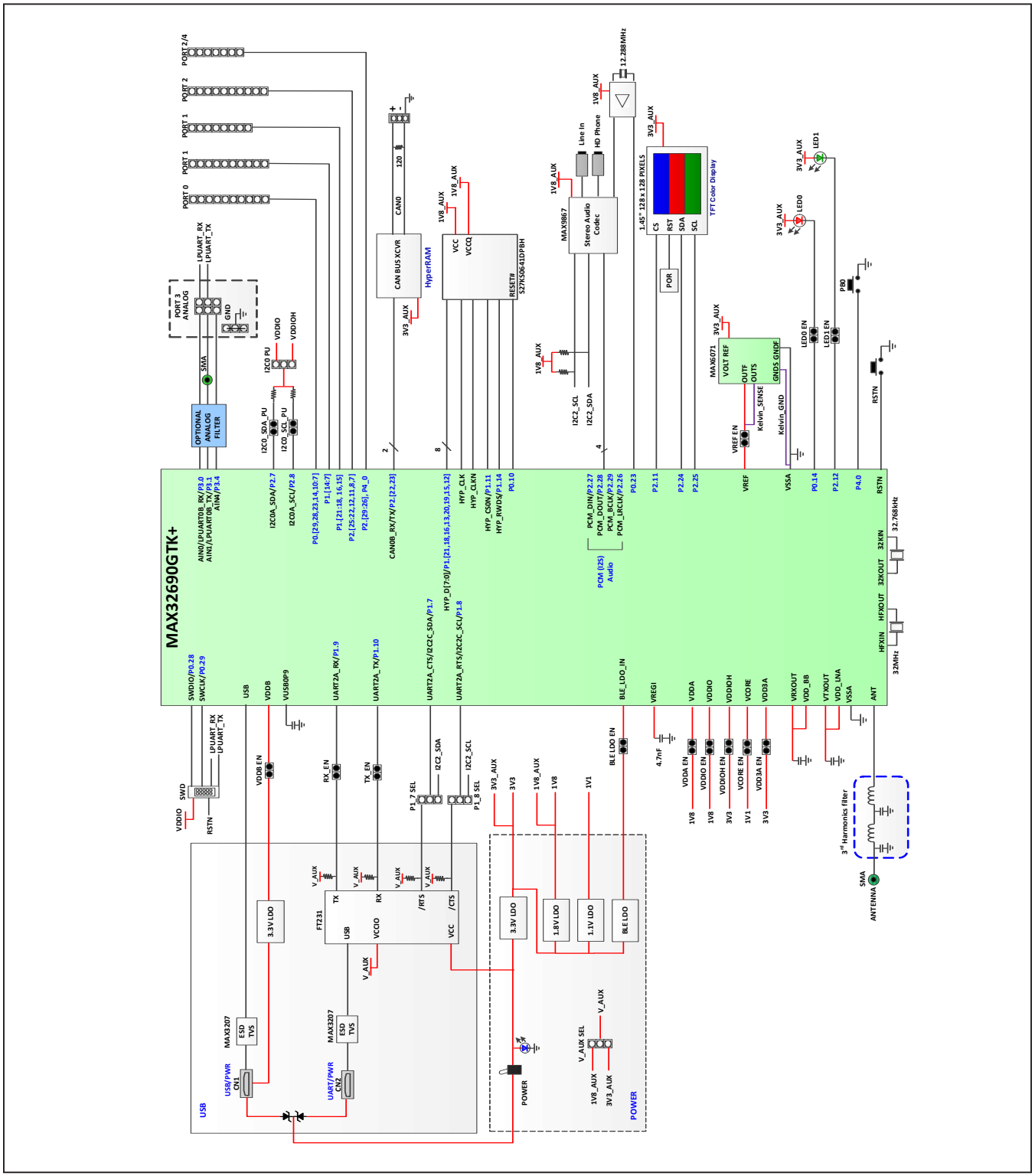

MAX32690 EV Kit Schematic Diagrams (continued)

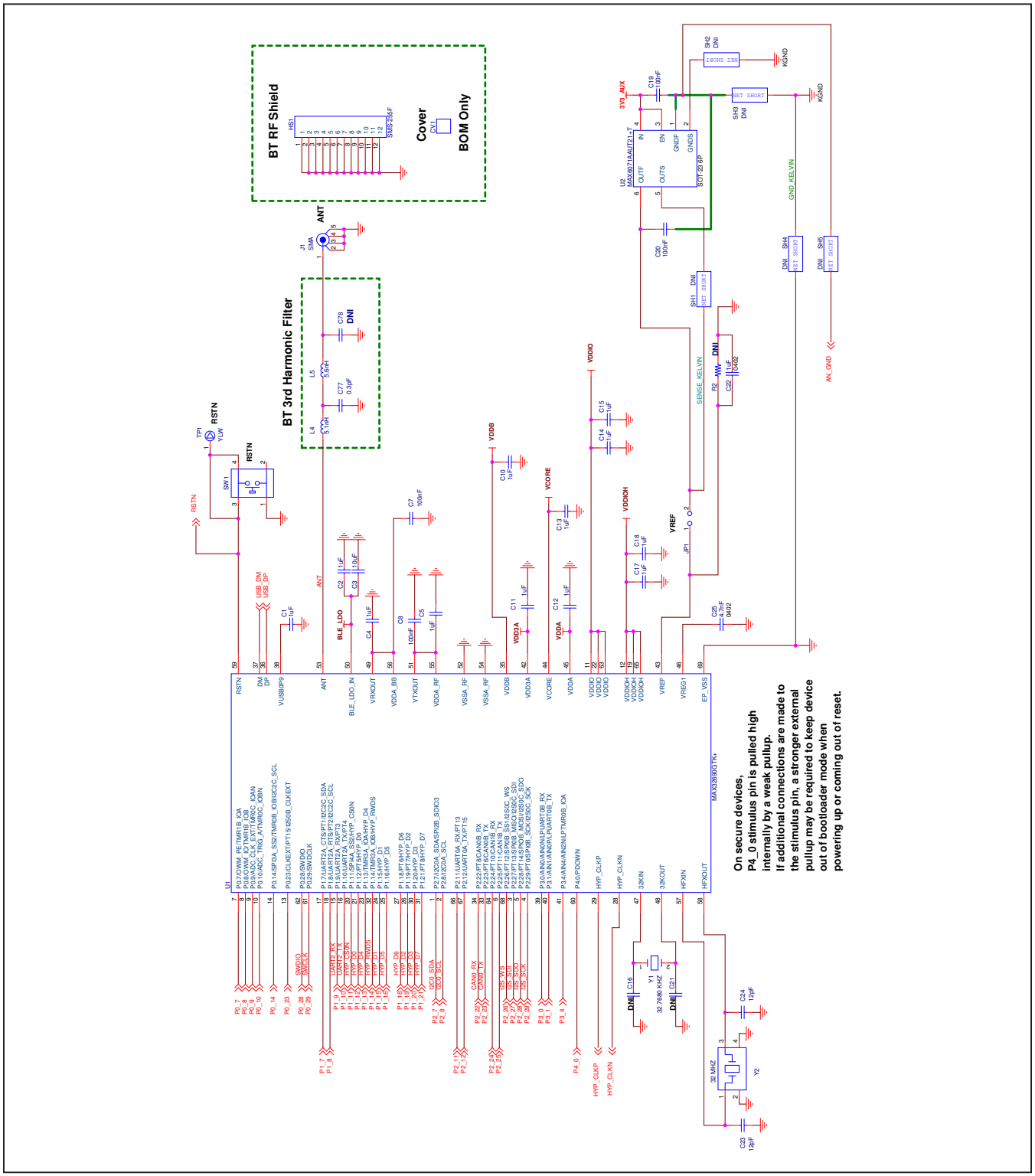

MAX32690 EV Kit Schematic Diagrams (continued)

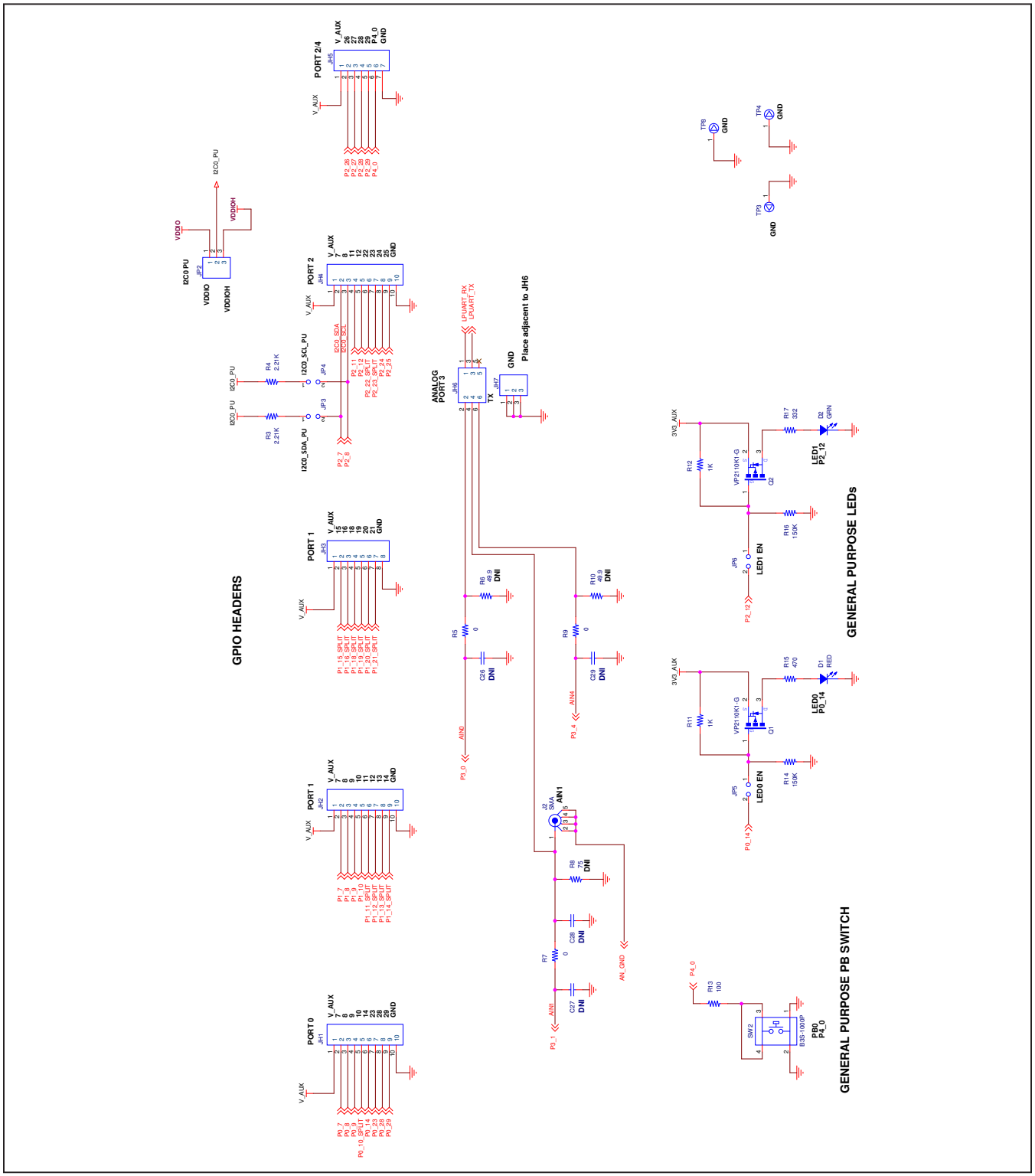

MAX32690 EV Kit Schematic Diagrams (continued)

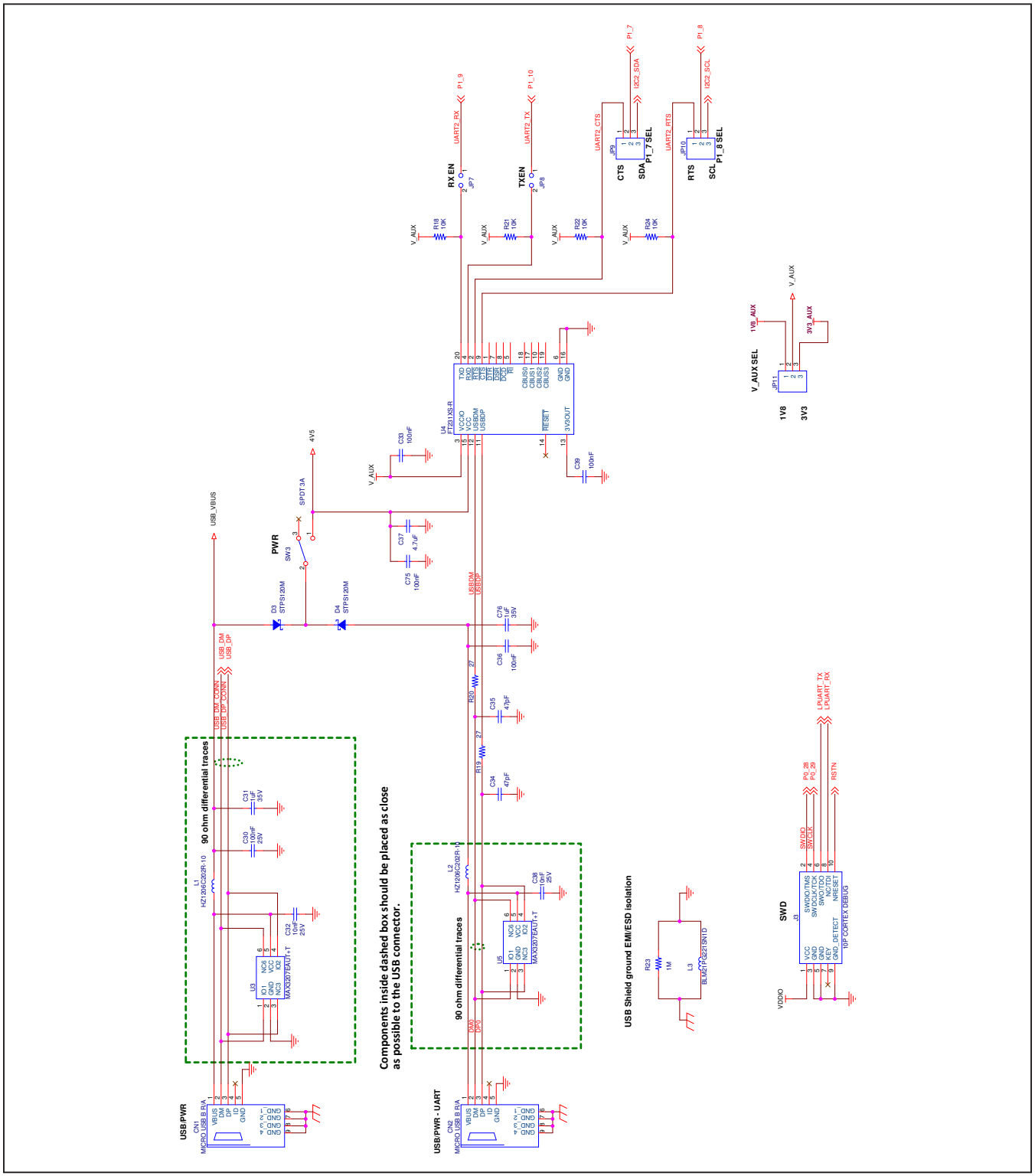

MAX32690 EV Kit Schematic Diagrams (continued)

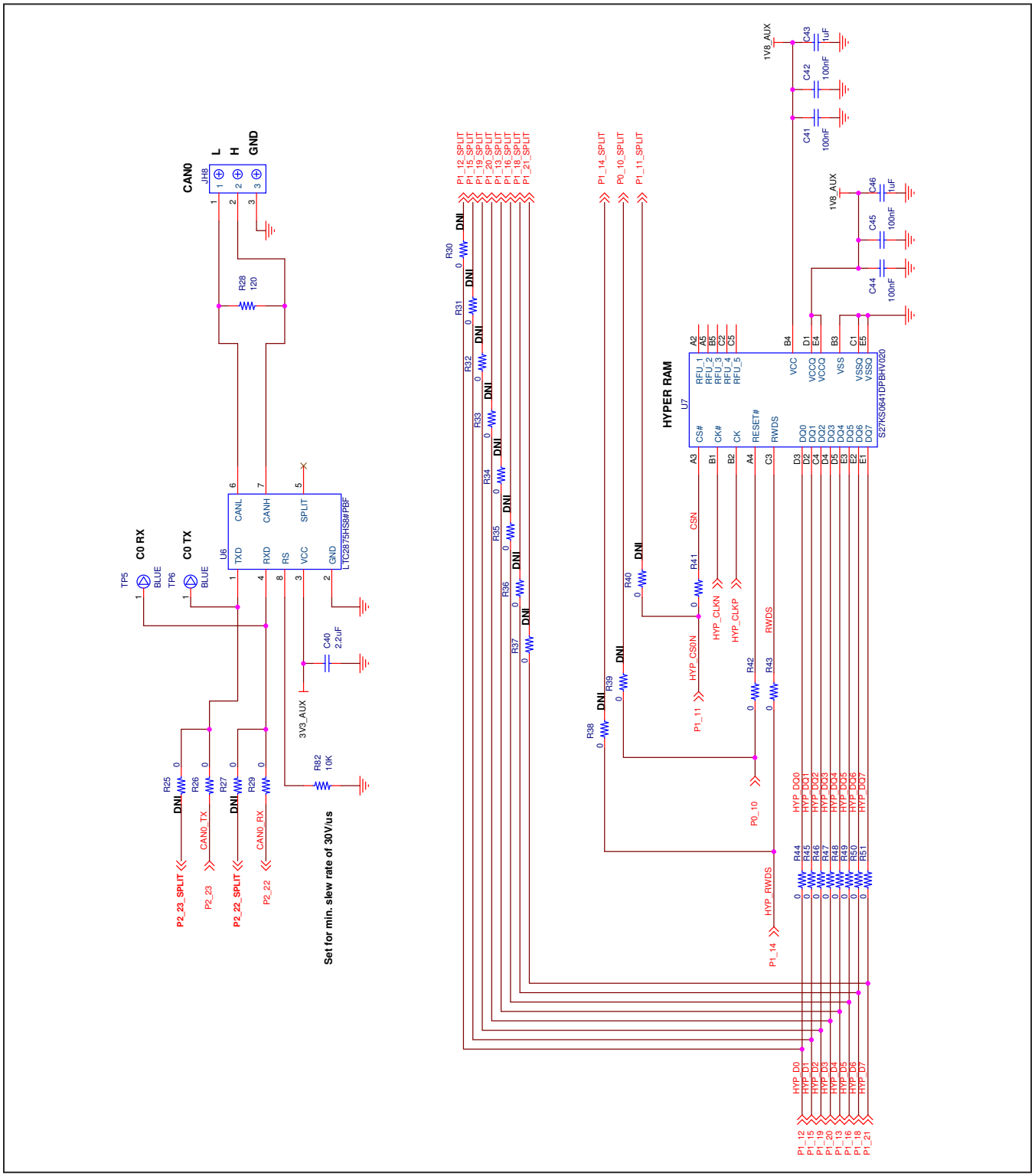

MAX32690 EV Kit Schematic Diagrams (continued)

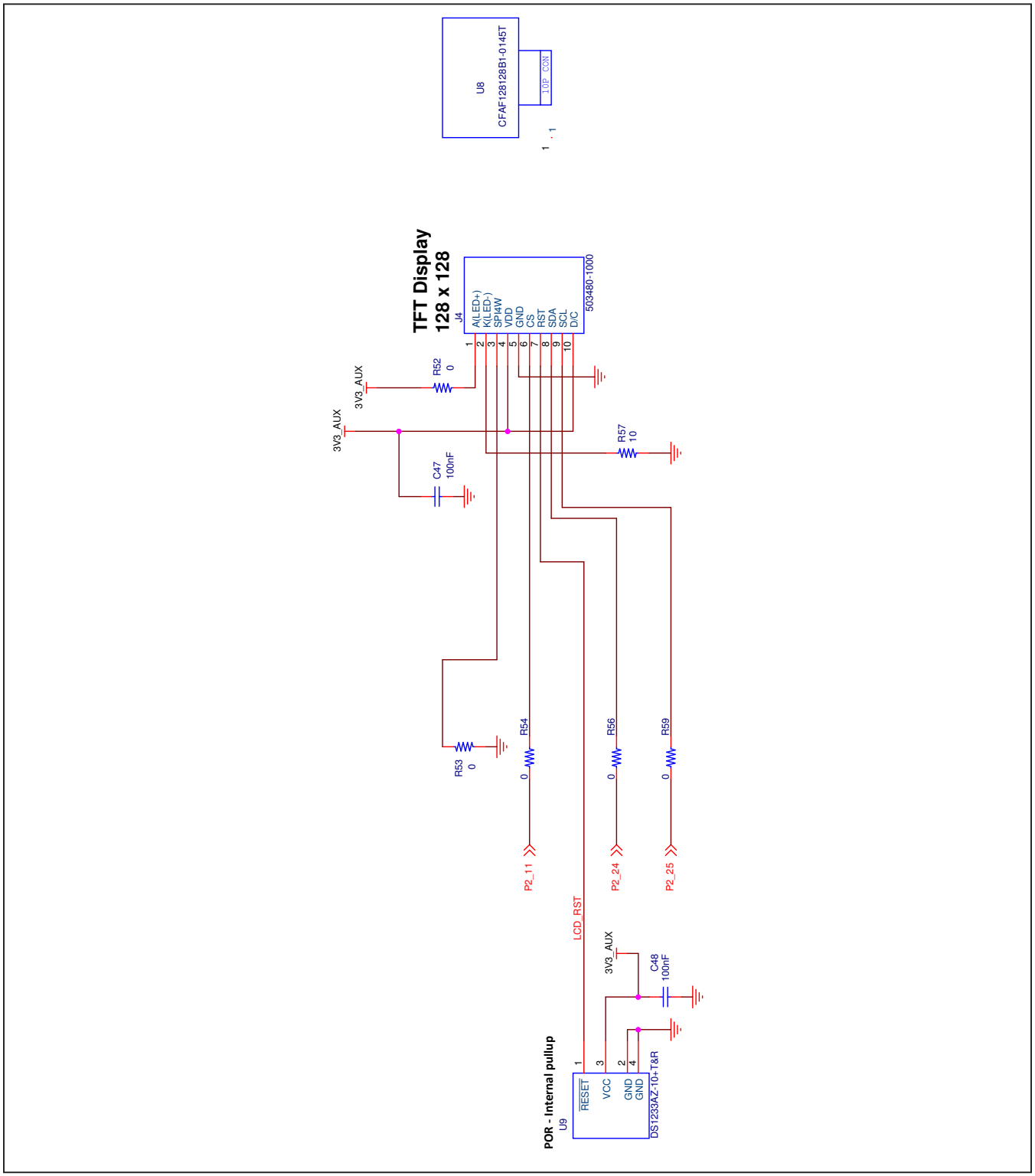

MAX32690 EV Kit Schematic Diagrams (continued)

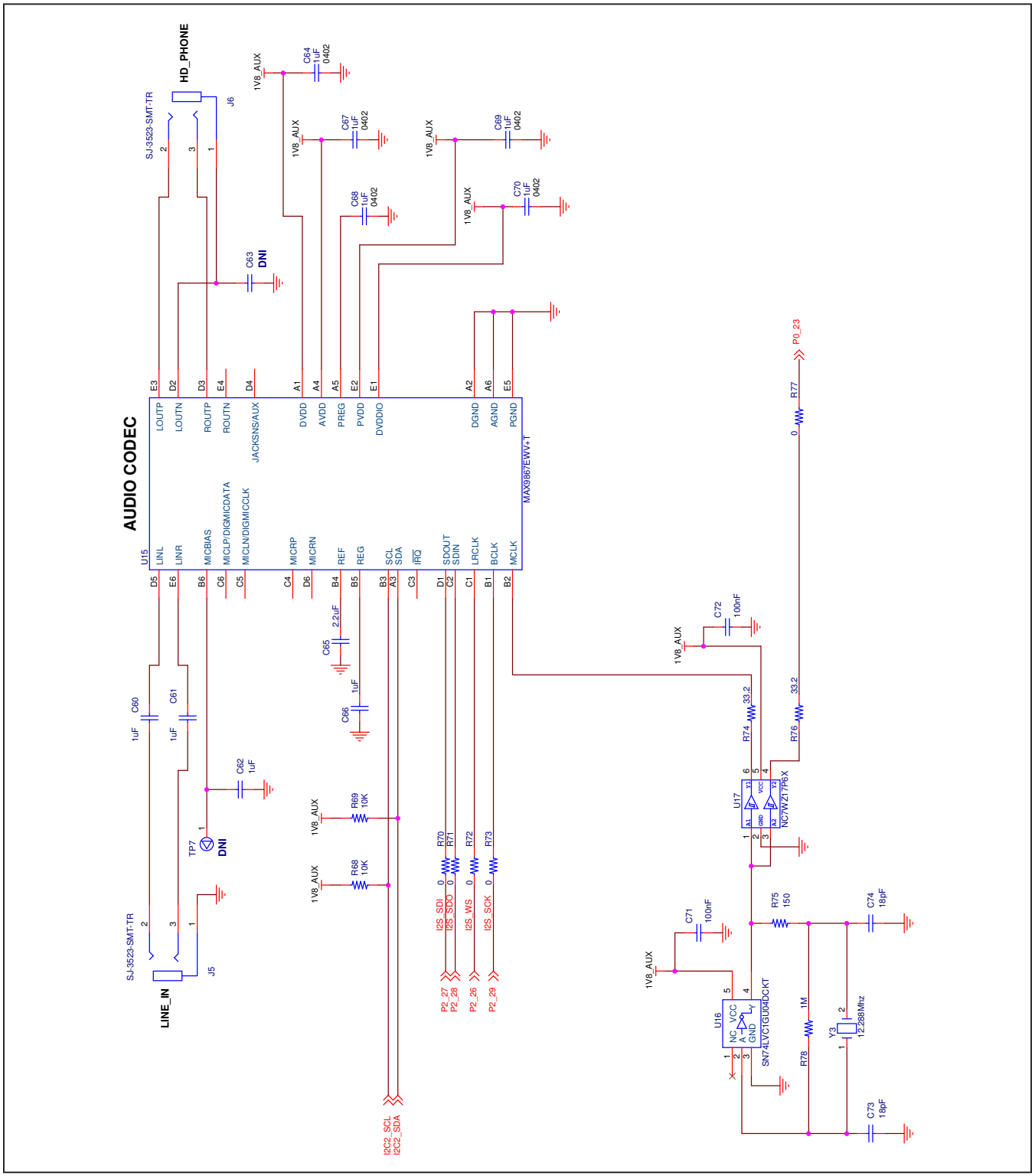

MAX32690 EV Kit Schematic Diagrams (continued)

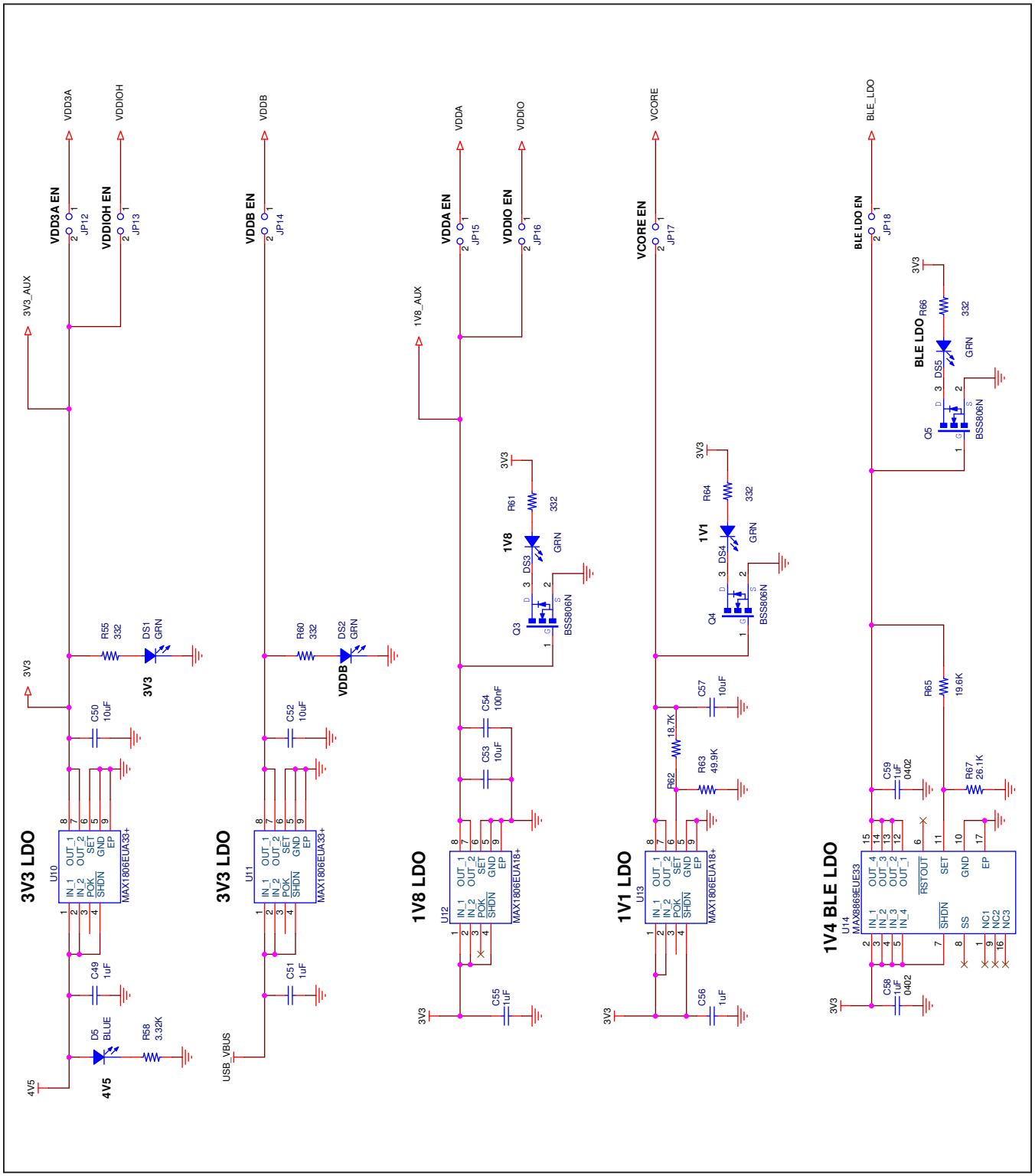

Revision History

REVISION NUMBER	REVISION DATE	DESCRIPTION	PAGES CHANGED
0	11/22	Initial release	—

Information furnished by Analog Devices is believed to be accurate and reliable. However, no responsibility is assumed by Analog Devices for its use, nor for any infringements of patents or other rights of third parties that may result from its use.Specifications subject to change without notice. No license is granted by implication or otherwise under any patent or patent rights of Analog Devices. Trademarks and registered trademarks are the property of their respective owners.

Mouser Electronics

Authorized Distributor

Click to View Pricing, Inventory, Delivery & Lifecycle Information:

Analog Devices Inc.:

MAX32690EVKIT#