DESCRIPTION

Demonstration circuit 868 is a dual-output stepdown power supply. The input voltage is from 4.5V to 32V. The supply has two outputs: 3.3V/5A_{MAX} and 8.5V/3.5A_{MAX}. When the input voltage is close to the output voltage, the supply is in dropout mode. The design features the LTC3827-1, the low quiescent current, 2-phase, dual-output synchronous buck regulator.

Operating the two high side MOSFETs 180 degrees out of phase significantly reduces peak input ripple current; thereby reducing input capacitance and EMI noise. Both controllers have internal current foldback for overload condition. Current foldback limits MOSFET heat dissipation during short-circuit conditions. The LTC3827-1 features a precision 0.8V reference and a power good output indicator. The PLLIN/MODE pin selects among Burst Mode operation, pulse skipping mode, or continuous inductor current mode at light loads. The controller can operate at up to 99% duty cycle for very low dropout capability.

Design files for this circuit board are available. Call the LTC factory.

, LTC and LT are registered trademarks of Linear Technology Corporation.

Table 1. Performance Summary

PARAMETER	CONDITION	VALUE
Input Voltage Range	If the input voltage must exceed 32V, use higher voltage rating input capacitors. The IC works up to 36V. Minimum of 9V input is needed for 8.5V output regulation at 3A load.	4.5V to 32V
Outputs	V_{OUT1} = 3.3V, 0A to 5A	3.3V ± 2%
	V_{OUT2} = 8.5V, 0A to 3.5A, Vin>9V	8.5V ± 2%
Typical Output Ripple (V_{OUT1})	20MHz BW, 5A load, V_{IN} = 32V, frequency = 400kHz	35mV_{P-P}
Typical Output Ripple (V_{OUT2})	20MHz BW, 3.5A load, V_{IN} = 32V, frequency = 400kHz	30mV_{P-P}
Typical Operating Frequency	PLLLPF floating (position JP1 to 400Khz)	400kHz
Typical input current@no load	CH1 on, no load, CH2 off, frequency=400kHz, Vin=16V, Burst Mode	85uA
Efficiency for Vout1	VIN=12V, Vout1=3.3V at 3.5A, frequency =400KHz	94%
Efficiency for Vout2	VIN=12V, Vout2=8.5V at 2.5A, frequency =400kHz	98%

Demonstration circuit 868 is easy to set up to evaluate the performance of the LTC3827-1. Refer to Figure 1 for proper measurement equipment setup and follow the procedure below:

1. Place RUN1 and RUN2 in OFF position, the FREQ jumper at the selected frequency and the PLLIN/MODE jumper JP2 in desired Mode (Burst or CCM Mode) position. Table 2 shows the default setting for DC868.

JP1 FREQ	JP2 PLL/MODE	JP3 RUN1	JP4 RUN2	JP5 TRACK1	JP6 TRACK2
400kHz	BURST	ON	ON	SS1	SS2

Table 2. Default Jumper Settings

2. Connect the desired loads between 3.3V and 8.5V terminals and their closest PGND terminals on the board.

NOTE: The maximum load at 3.3V is 5A, and the maximum at 8.5V is 3.5A.

3. Connect the input power supply to the VIN and GND terminals on the right, center of the board.

   NOTE: Do not increase V_{IN} over 32V.

4. Switch on the desired channel(s) by moving the RUN1 and/or RUN2 jumper to “on” position.

5. Measure the output voltages. They should be 3.3V ±0.066V and 8.5V ±0.17V respectively, within each specified maximum load current.

6. For better efficiency at high input voltage, tie EXTVCC to external source of 5V-9V or mount the optional resistor R1(0 ohm).

7. If external synchronization is desired, remove JP2 and tie PLLIN/MODE to external clock signal. Please refer to datasheet for more details.

The following table shows the different output tracking options for Vout1 and Vout2

JP5 Set	Function	R25	R26	R27
SS1*	SS w/o tracking	DNP	DNP	DNP
TRACK	Track Track1	35.7k	11.5k	DNP
TRACK	Track Vout2	35.7k	11.5k	zero

JP6 Set	Function	R28	R29
SS2*	SS w/o tracking	DNP	DNP
TRACK	Track Track2	TBD*	TBD*

Table 3. Tracking Jumper Settings

*With default JP5 and JP6 setting, Vout1 and Vout2 will start independently. Please refer to datasheet for TBD value calculation.

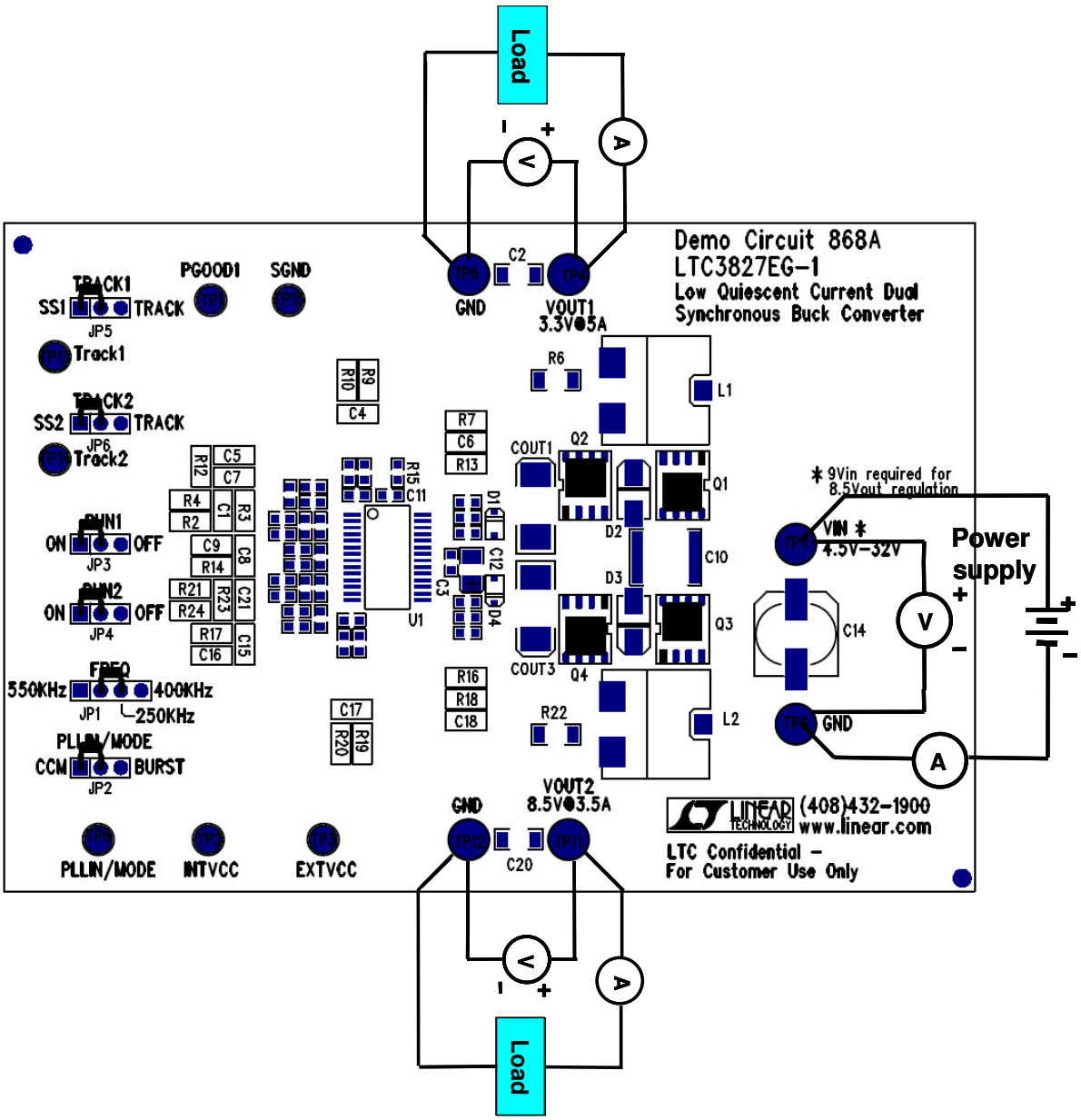

Figure 1. Proper Measurement Equipment Setup

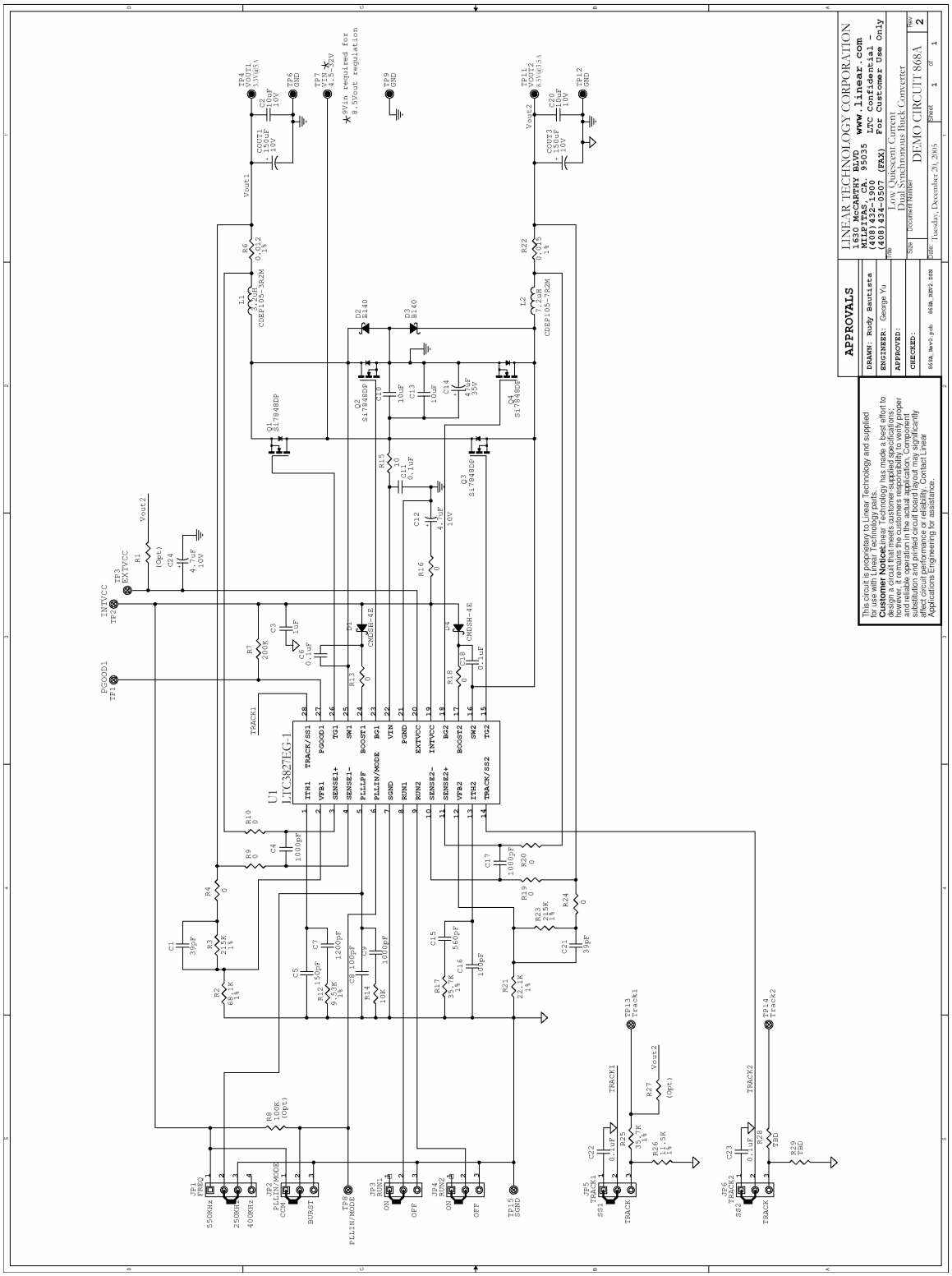
U1
LTC3827EG-1
APPROVALS
DRAWN: Rudy Bautista
ENGINEER: George Yu
APPROVED:
CHECKED:
LINEAR TECHNOLOGY CORPORATION
DEMO CIRCUIT 868A
Low Quiescent Current
Dual Synchronous Buck Converter
Tuesday, December 20, 2005

Mouser Electronics

Authorized Distributor

Click to View Pricing, Inventory, Delivery & Lifecycle Information:

Analog Devices Inc.:

DC868A