DEMO CIRCUIT 827
QUICK START GUIDE

LTC2803 and LTC2804

1.8V to 5.5V RS-232 Dual Transceiver

DESCRIPTION

Demonstration circuit 827 is a 1.8V to 5.5V RS-232 Dual Transceiver featuring the LTC2803 and LTC2804.

VERSION	P/N
DC827A-A	LTC2803CDHC
DC827A-B	LTC2804CDHC

Design files for this circuit board are available. Call the LTC factory.

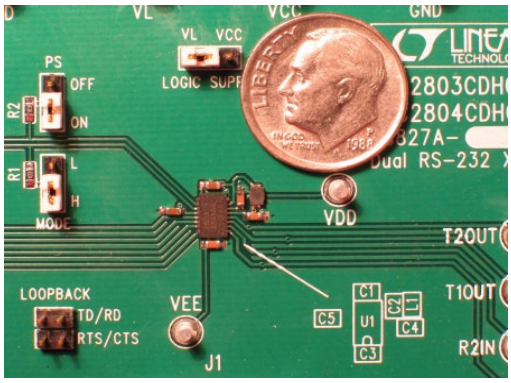

PERFORMANCE SUMMARY

SYMBOL	PARAMETER	CONDITIONS	MIN	TYP	MAX	UNITS
V_{CC}	Input Supply Voltage		1.8		5.5	V
V_L	Logic Supply Voltage		1.8		5.5	V
SR(D)	Driver Slew Rate	R_L=3kΩ, 50pF<C_L<2.5nF				
		LTC2803:	4		30	V/µs
		LTC2804:	4		150	V/µs
--	Maximum Data Rate	R_L = 3kΩ, C_L = 2.5nF	100			kbps
		R_L = 3kΩ, C_L = 1.0nF	250			kbps
		R_L = 3kΩ, C_L = 250pF (LTC2804)	1000			kbps

JUMPERS

SCH	NAME	PURPOSE
JP1, JP2	MODE, PS	Mode control, as follows: **PS MODE MODE NAME** OFF L Shutdown OFF H Receivers Active ON L Drivers Disabled ON H Normal
JP3	LOGIC SUPPLY	Selects supply for VL pin. Use setting "VL" for a separate logic supply, or "VCC" to share a single supply.
JP4, JP5	TD/RD, RTS/CTS	Selects Receiver loopback mode, for use with the DB9 connector. In this configuration, R1OUT is connected to T1IN and R2OUT is connected to T2IN.

SCH	NAME	PURPOSE
		For the UART connected to the DB9, this wraps TD back to RD and RTS back to CTS.

QUICK START PROCEDURE

Demonstration circuit 827 is easy to set up for evaluating the LTC2803 and LTC2804. Refer to Figure 1 or Figure 2 for proper setup and follow the procedure below:

1. Place jumpers in the following positions:

JP1	MODE	H
JP2	PS	ON

2. With power off, connect the primary power supply to VCC and GND.
3. Set **JP3** "Logic Supply" to the correct position. If a separate logic supply isn't needed, use the "VCC" setting. If a separate Logic Supply will be used, use the "VL" setting and, with the power off, connect the supply to VL and GND.
4. For transmitter loopback mode (Figure 1), connect each driver output to a receiver input. Connect input sources to the driver inputs. (Make sure that input voltages don't exceed 7V.) Omit Loopback jumpers **JP4** and **JP5** for this mode.
5. Alternatively, to operate the part in receiver loopback mode (Figure 2), connect a 9-wire RS-232 cable between DB9 connector J1 and the serial port of a computer. Place jumpers in the two LOOPBACK positions:

JP4	TD/RD
JP5	CTS/RTS

   Data may be transmitted and monitored using a terminal emulation program such as Terminal, HyperTerminal, Tera Term Pro, or RealTerm.
6. Turn on the input supply/supplies in any order. (Note: Make sure that the voltage doesn't exceed 7V.)
7. Check for the proper generated supply voltages: VDD = 6.5V to 7.5V, and VEE = –6.8V to –5.8V.
8. Send data!

Notes:

1. Inputs PS and MODE may be driven by signals instead of set with jumpers. If done, ensure that the voltage of PS doesn't exceed VL.
2. The terminal emulation program RealTerm can lock up when RTS/CTS flow control is used in receiver loopback mode.

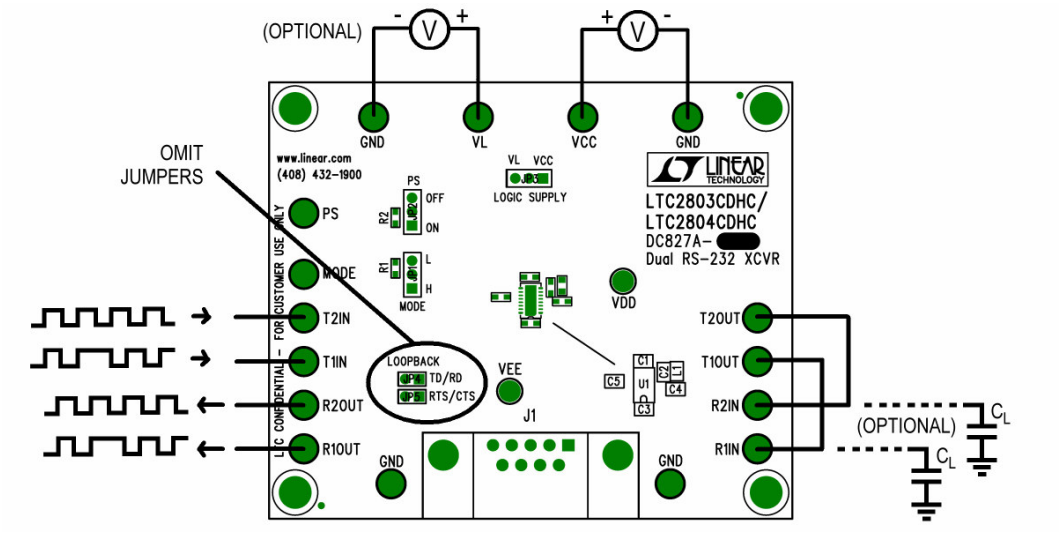

Figure 1. Setup for Transmitter Loopback Mode

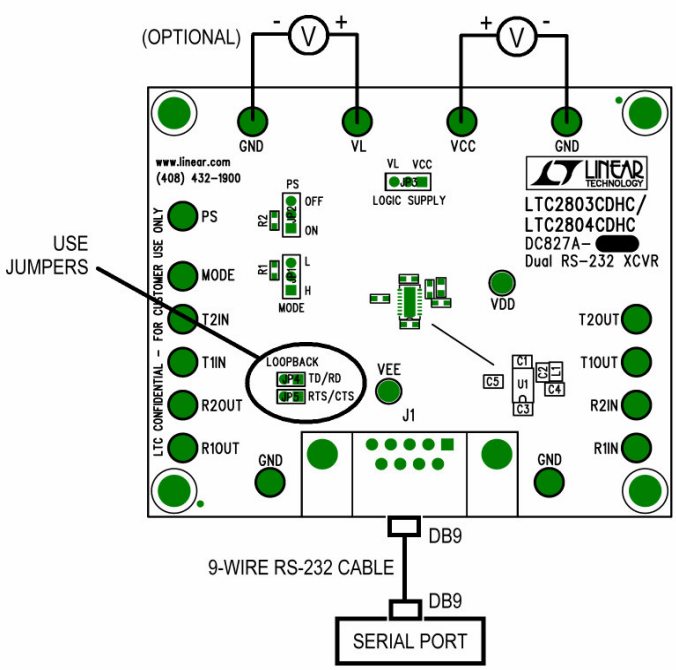

Figure 2. Setup for Receiver Loopback Mode

REVISION HISTORY

ECO	REV	DESCRIPTION	DATE	APPROVED
	1	PROTO	08/17/04	

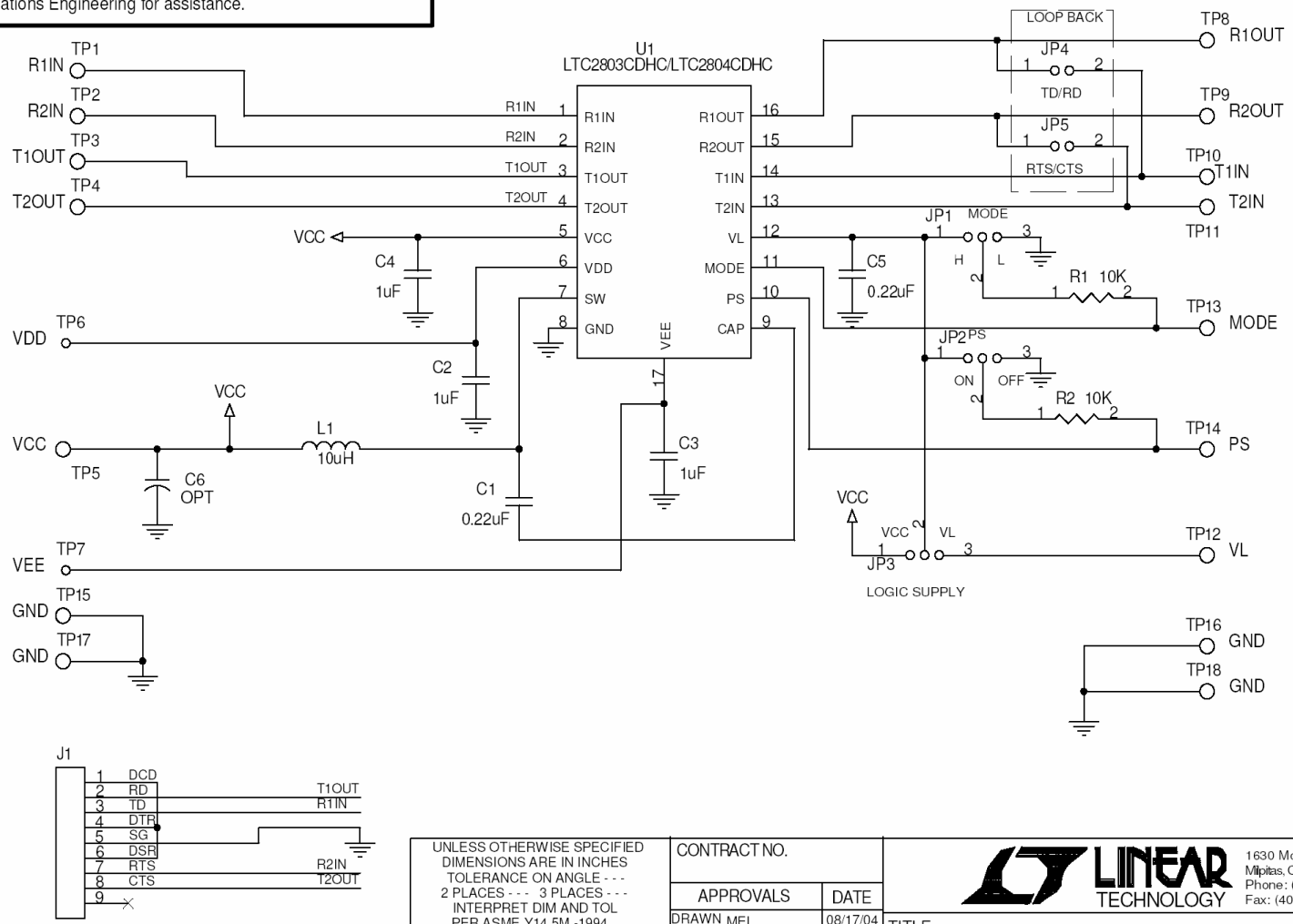

UNLESS OTHERWISE SPECIFIED DIMENSIONS ARE IN INCHES TOLERANCE ON ANGLE - - - 2 PLACES - - - 3 PLACES - - - INTERPRET DIM AND TOL PER ASME Y14.5M -1994

THIRD ANGLE PROJECTION

DO NOT SCALE DRAWING

CONTRACT NO.

APPROVALS	DATE
DRAWN MEI	08/17/04
CHECKED	
APPROVED	
ENGINEER	
DESIGNER	

Tuesday, October 26, 2004

LINEAR TECHNOLOGY
1630 McCarthy Blvd.
Milpitas, CA 95035
Phone: (408)432-1900
Fax: (408)434-0507

TITLE SCH, LTC2803CDHC/LTC2804CDHC, DUAL RS232 TRANSCEIVER

SIZE	CAGE CODE	DWG NO	REV
A		DC827A	1

SCALE:NONE FILENAME: 827A-1.DSN SHEET 1 OF 1