19-1755; Rev 1; 3/01

EVALUATION KIT AVAILABLE

Wide Brightness Range CCFL Backlight Controllers

MAX1739/MAX1839

General Description

The MAX1739/MAX1839 fully integrated controllers are optimized to drive cold-cathode fluorescent lamps (CCFLs) using the industry-proven Royer oscillator inverter architecture. The Royer architecture provides near sinusoidal drive waveforms over the entire input range to maximize the life of CCFLs. The MAX1739/MAX1839 optimize this architecture to work over a wide input voltage range, achieve high efficiency, and maximize the dimming range.

The MAX1739/MAX1839 monitor and limit the transformer center-tap voltage when required. This ensures minimal voltage stress on the transformer, which increases the operating life of the transformer and eases its design requirements. These controllers also provide protection against many other fault conditions, including lamp-out and buck short faults.

These controllers achieve 50:1 dimming range by simultaneously adjusting lamp current and "chopping" the CCFL on and off using a digitally adjusted pulse-width modulated (DPWM) method. CCFL brightness is controlled by an analog voltage or is set with an SMBus™-compatible two-wire interface (MAX1739).

The MAX1739/MAX1839 drive an external high-side N-channel power MOSFET and two low-side N-channel power MOSFETs, all synchronized to the Royer oscillator. An internal 5.3V linear regulator powers the MOSFET drivers and most of the internal circuitry. The MAX1739/MAX1839 are available in space-saving 20-pin QSOP packages and operate over the -40°C to +85°C temperature range.

Applications

Notebook/Laptop Computers

Car Navigation Displays

LCD Monitors

Point-of-Sale Terminals

Portable Display Electronics

SMBus is a trademark of Intel Corp.

Features

- ♦ **Fast Response to Input Change**
- ♦ **Wide Input Voltage Range (4.6V to 28V)**
- ♦ **High Power-to-Light Efficiency**
- ♦ **Minimizes Transformer Voltage Stress**
- ♦ **Lamp-Out Protection with 2s Timeout**
- ♦ **Buck Switch Short and Other Single-Point Fault Protection**
- ♦ **Integrated Royer MOSFET Drivers Reduce Transformer Pin Count**
- ♦ **Buck Operation Synchronized to Royer Oscillator**
- ♦ **Synchronizable DPWM Frequency**
- ♦ **Pin-Selectable Brightness Control Interface**
- ♦ **SMBus Serial Interface (MAX1739)**
- ♦ **Analog Interface (MAX1739/MAX1839)**

Ordering Information

PART	TEMP. RANGE	PIN-PACKAGE
MAX1739EEP	-40°C to +85°C	20 QSOP
MAX1839EEP	-40°C to +85°C	20 QSOP

Pin Configuration

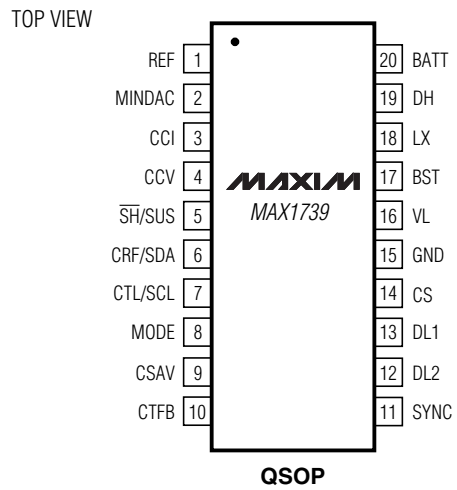

Pin Configurations continued at end of data sheet.

For pricing, delivery, and ordering information, please contact Maxim Direct at 1-888-629-4642, or visit Maxim's website at www.maxim-ic.com.

Wide Brightness Range CCFL Backlight Controllers

ABSOLUTE MAXIMUM RATINGS

V_{BATT} to GND .....-0.3V to 30V
V_{BST}, V_{SYNC} to GND.....-0.3V to 34V
V_{BST} to V_{LX} .....-0.3V to 6V
V_{DH} to V_{LX}.....-0.3V to (V_{BST} + 0.3V)
V_{LX} to GND.....-6V to (V_{BST} + 0.3V)
VL to GND.....-0.3V to 6V
V_{CCV}, V_{CCI}, V_{REF}, V_{DL1}, V_{DL2} to GND .....-0.3V to (VL + 0.3V)
V_{MINDAC}, V_{CTFB}, V_{CSAV} to GND .....-0.3V to 6V
V_{CS} to GND.....-0.6V to (VL + 0.3V)
V_{MODE} to GND.....-6V to 12V
$V_{CRF/SDA}$, V_{CRF}, $V_{CTL/SCL}$, V_{CTL}, $V_{\overline{SH}/SUS}$, $V_{\overline{SH}}$ to GND .....-0.3V to 6V
Continuous Power Dissipation (T_A = +70°C)
20-Pin QSOP (derate 9.1mW/°C above +70°C).....727mW
Operating Temperature .....-40°C to +85°C
Storage Temperature.....-65°C to +150°C
Lead Temperature (soldering, 10s) .....+300°C

Stresses beyond those listed under "Absolute Maximum Ratings" may cause permanent damage to the device. These are stress ratings only, and functional operation of the device at these or any other conditions beyond those indicated in the operational sections of the specifications is not implied. Exposure to absolute maximum rating conditions for extended periods may affect device reliability.

ELECTRICAL CHARACTERISTICS

(V+ = 8.2V, $V_{\overline{SH}}$/SUS = $V_{\overline{SH}}$ = 5.5V, MINDAC = GND, **T_A = 0°C to +85°C**, unless otherwise noted. Typical values are at T_A = +25°C.)

PARAMETER	CONDITIONS		MIN	TYP	MAX	UNITS
SUPPLY AND REFERENCE						
V_{BATT} Input Voltage Range	V_L = V_{BATT}		4.6		5.5	V
	V_L = open		6		28	
V_{BATT} Quiescent Current, Operation with Full Duty Cycle on DH	DH = DL1 = DL2 = open	V_{BATT} = 28V		3.2	6	mA
		V_{BATT} = V_L = 5V		3.2	6	
V_{BATT} Quiescent Current, Shutdown	$\overline{SH}$/SUS = $\overline{SH}$ = GND			6	20	µA
VL Output Voltage, Normal Operation	6V < V_{BATT} < 28V, 0 < I_{LOAD} < 15mA		5.0	5.35	5.5	V
VL Output Voltage, Shutdown	$\overline{SH}$/SUS = $\overline{SH}$ = GND, no load		3.5	4.5	5.5	V
VL Undervoltage Lockout Threshold	VL rising (leaving lockout)				4.6	
	VL falling (entering lockout)		4.0			V
VL Undervoltage Lockout Hysteresis				300		mV
REF Output Voltage, Normal Operation	4.5V < VL < 5.5V, I_{REF} = 40µA		1.96	2.00	2.04	V
V_L POR Threshold			0.9		2.7	V
SWITCHING REGULATOR						
DH Driver On-Resistance					18	Ω
DL1, DL2 Driver On-Resistance					18	Ω
Minimum DH Switching Frequency	1/t_{DH}, SYNC = CS or GND, not synchronized		49	56	64	kHz
DH Minimum Off-Time			250	375	500	ns
DH Maximum Duty Cycle				98		%
SYNC Synchronization Range	Detect falling edges on SYNC		64		200	kHz
SYNC Input Current	0 < V_{SYNC} < 30V		-2		2	µA
SYNC Input Threshold	SYNC falling, referred to CS		400	500	600	mV
SYNC Input Hysteresis	Referred to the SYNC input threshold		50	100	150	mV
SYNC Threshold Crossing to DL1, DL2 Toggle Delay	V_{SYNC} = 0 to 5V, C_{DL_1} and C_{DL_2} < 100pF, 50% point on SYNC to 50% point on DL1 or DL2				120	ns
CS Overcurrent Threshold			408	450	492	mV

ELECTRICAL CHARACTERISTICS (continued)

($V+$ = 8.2V, $V_{\overline{SH}}$/SUS = $V_{\overline{SH}}$ = 5.5V, MINDAC = GND, **T_A = 0°C to +85°C**, unless otherwise noted. Typical values are at T_A = +25°C.)

PARAMETER	CONDITIONS		MIN	TYP	MAX	UNITS
DAC AND ERROR AMPLIFIER						
DAC Resolution	Guaranteed monotonic		5			Bits
MINDAC Input Voltage Range			0		2	V
MINDAC Input Bias Current	0 < V_{MINDAC} < 2V		-1		1	µA
MINDAC Digital PWM Disable Threshold	MINDAC = VL		2.4	2.9	4	V
CSAV Input Voltage Range			0		0.8	V
CSAV Regulation Point	V_{MINDAC} = 0, DAC code = 11111 binary		188	194	200	mV
	V_{MINDAC} = 0, DAC code = 00001 binary		2	6.25	16	
	V_{MINDAC} = 1V, DAC code = 00000 binary		93	100	110	
CSAV Input Bias Current			-1		1	µA
CSAV to CCI Transconductance	1V < V_{CCI} < 2.7V			100		µmho
CTFB Input Voltage Range			0		2	V
CTFB Input Bias Current			-1		1	µA
CTFB Regulation Point			570	600	630	mV
CTFB to CCV Transconductance	1V < V_{CCV} < 2.7V		30	40	50	µmho
TIMERS AND FAULT DETECTION						
Chopping Oscillator Frequency	No AC signal on MODE, not synchronized		24	28	32	kHz
Digital PWM Chop-Mode Frequency	No AC signal on MODE		205	220	235	Hz
	32kHz AC signal on MODE			250		
	100kHz AC signal on MODE			781		
MODE to DPWM Sync Ratio	F_{MODE} / F_{DPWM}			128		
Lamp-Out Detection Timeout Timer (Center-Tap Voltage Stuck at Maximum) (Note 1)	V_{CSAV} < CSAV lamp-out threshold	No AC signal on MODE	2.06	2.33	2.73	s
		32kHz AC signal on MODE		2.05		
		100kHz AC signal on MODE		0.66		
CSAV Lamp-Out Threshold			50	75	100	mV
Fault-Detection Threshold on CCV	(Note 2)		0.4		1	V
Shorted Buck-Switch Detection Timeout Timer (UL1950 Protection) (Note 3)	V_{CCV} < fault-detection threshold on CCV	No AC signal on MODE	332	291	259	ms
		32kHz AC signal on MODE		256		
		100kHz AC signal on MODE		82		
Lamp Turn-On Delay	After $\overline{SH}$/SUS or SH forces device on or $\overline{SH}$ rises			4		ms
MODE Operating Voltage Range			-5.5		11	V
MODE = GND Threshold (min Brightness = 0)	To sync DPWM oscillator, not in shutdown (Note 4)				0.6	V
MODE = REF Threshold (max Brightness = 0)	To sync DPWM oscillator, not in shutdown (Note 4)		1.4		2.6	V
MODE = V_L Threshold (MAX1739 SMB Interface Mode)	To sync DPWM oscillator, not in shutdown (Note 4)		VL - 0.6			V
MODE AC Signal Amplitude	Peak to peak (Note 5)		2			V
MODE AC Signal Synchronization Range	Chopping oscillator synchronized to MODE AC signal		32		100	kHz

Wide Brightness Range CCFL Backlight Controllers

ELECTRICAL CHARACTERISTICS (continued)

(V+ = 8.2V, $V_{\overline{SH}}$/SUS = $V_{\overline{SH}}$ = 5.5V, MINDAC = GND, **T_A = 0°C to +85°C**, unless otherwise noted. Typical values are at T_A = +25°C.)

PARAMETER	CONDITIONS	MIN	TYP	MAX	UNIT
ANALOG INTERFACE BRIGHTNESS CONTROL (MODE connected to REF or GND)					
CRF/SDA, CRF Input Range		2.7		5.5	V
CRF/SDA, CRF Input Current	$V_{CRF/SDA}$ = V_{CRF} = 5.5V			20	µA
	$V_{CRF/SDA}$ = V_{CRF} = 5.5V, $\overline{SH}$/SUS = $\overline{SH}$ = 0	-1		1	µA
CTL/SCL, Input Range	MAX1739	0		CRF/ SDA	V
CTL Input Range	MAX1839	0		CRF	V
CTL/SCL, CTL Input Current	MODE = REF or GND	-1		1	µA
ADC Resolution	Guaranteed monotonic		5		Bits
ADC Hysteresis			1		LSB
$\overline{SH}$ Input Low Voltage				0.8	V
$\overline{SH}$ Input High Voltage		2.1			V
$\overline{SH}$/SUS Input Hysteresis when Transitioning In and Out of Shutdown			150		mV
$\overline{SH}$ Input Bias Current		-1		1	µA
SYSTEM MANAGEMENT BUS BRIGHTNESS CONTROL (MAX1739, MODE connected to V_L, see Figures 12 and 13)					
CRF/SDA, CTL/SCL, $\overline{SH}$/SUS Input				0.8	V
CRF/SDA, CTL/SCL, $\overline{SH}$/SUS Input		2.1			V
CRFSDA, CTLSCL Input Hysteresis			300		mV
CRF/SDA, CTL/SCL, $\overline{SH}$/SUS Input		-1		1	µA
CRF/SDA Output Low Sink Current	$V_{CRF/SDA}$ = 0.4V	4			mA
CTL/SCL Serial Clock High Period	t_{HIGH}	4			µs
CTL/SCL Serial Clock Low Period	t_{LOW}	4.7			µs
Start Condition Setup Time	$t_{SU:STA}$	4.7			µs
Start Condition Hold Time	$t_{HD:STA}$	4			µs
CRF/SDA Valid to CTL/SCL Rising Edge Setup Time, Slave Clocking in Data	$t_{SU:DAT}$	250			ns
CTL/SCL Falling Edge to CRF/SDA Transition	$t_{HD:DAT}$	0			ns
CTL/SCL Falling Edge to CRF/SDA Valid, Reading Out Data	t_{DV}			1	µs

ELECTRICAL CHARACTERISTICS

(V+ = 8.2V, $V_{\overline{SH}}$/SUS = $V_{\overline{SH}}$ = 5.5V, MINDAC = GND, **T_A = -40°C to +85°C**, unless otherwise noted.) (Note 6)

PARAMETER	CONDITIONS	MIN	TYP	MAX	UNITS
SUPPLY AND REFERENCE					
V_{BATT} Input Voltage Range	VL = V_{BATT}	4.6		5.5	V
	VL = open	6		28	
V_{BATT} Quiescent Current, Shutdown	$\overline{SH}$/SUS = $\overline{SH}$ = GND			20	µA
VL Output Voltage, Normal Operation	6V < V_{BATT} < 28V, 0 < I_{LOAD} < 15mA	5.0		5.6	V
VL Undervoltage Lockout Threshold	VL rising (leaving lockout)			4.6	V
	VL falling (entering lockout)	4.0			
REF Output Voltage, Normal Operation	4.5V < VL < 5.5V, I_{REF} = 40µA	1.95		2.05	V
VL POR Threshold		0.9		2.7	V
SWITCHING REGULATOR					
DH Driver On-Resistance				18	Ω
DL1, DL2 Driver On-Resistance				18	Ω
SYNC Synchronization Range	Detect falling edges on SYNC	64		200	kHz
CS Overcurrent Threshold		408		492	mV
DAC AND ERROR AMPLIFIER					
CSAV Regulation Point	V_{MINDAC} = 0, DAC code = 11111 binary	186		202	mV
CTFB Regulation Point		560		640	mV
CTFB to CCV Transconductance	1V < V_{CCV} < 2.7V	30		50	µmho
ANALOG INTERFACE BRIGHTNESS CONTROL (MODE connected to REF or MODE connected to GND)					
$\overline{SH}$ Input Low Voltage				0.8	V
$\overline{SH}$ Input High Voltage		2.1			V
SYSTEM MANAGEMENT BUS BRIGHTNESS CONTROL (MODE connected to VL)					
CRF/SDA, CTL/SCL, $\overline{SH}$/SUS Input Low Voltage				0.8	V
CRF/SDA, CTL/SCL, $\overline{SH}$/SUS Input High Voltage		2.1			V
CRF/SDA Output Low Sink Current	$V_{CRF/SDA}$ = 0.4V	4			mA

Note 1: Corresponds to 512 DPWM cycles or 65536 MODE cycles.

Note 2: When the buck switch is shorted, V_{CTFB} goes high causing V_{CCV} to go below the fault detection threshold.

Note 3: Corresponds to 64 DPWM cycles or 8192 MODE cycles.

Note 4: The MODE pin thresholds are only valid while the part is operating. In shutdown, V_{REF} = 0 and the part only differentiates between SMB mode and ADC mode. In shutdown with ADC mode selected, the CRF/SDA and CTL/SCL pins are at high impedance and will not cause extra supply current when their voltages are not at GND or VL.

Note 5: The amplitude is measured with the following circuit:

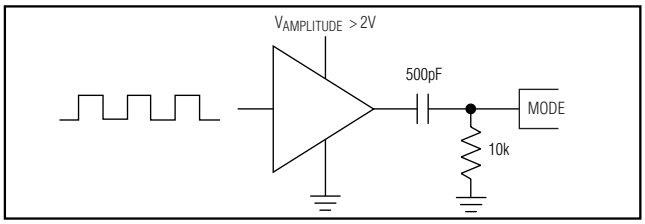

Note 6: Specifications from -40°C to +85°C are guaranteed by design, not production tested.

Wide Brightness Range CCFL Backlight Controllers

Typical Operating Characteristics

(V_{IN} = 12V, V_{CTL} = V_{CRF}, V_{MINDAC} = 1V, MODE = GND, Circuit of Figure 8.)

WIDE INPUT RANGE (V_{BATT} = 8V)

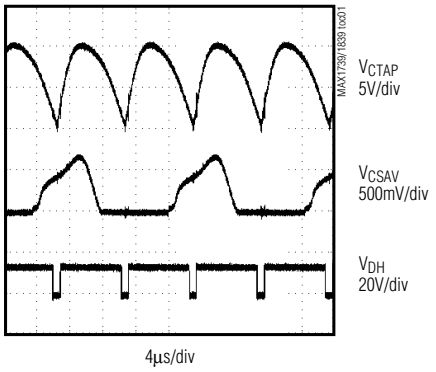

WIDE INPUT RANGE (V_{BATT} = 20V)

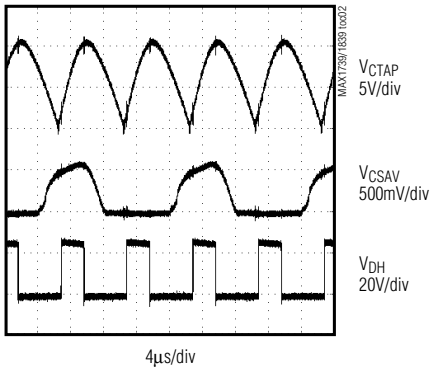

WIDE INPUT RANGE (V_{BATT} = 8V, DPWM = 9%, V_{CTL} = 0)

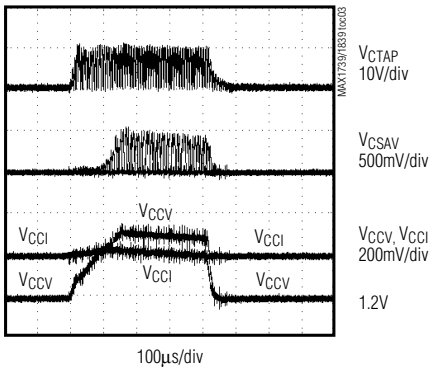

WIDE INPUT RANGE (V_{BATT} = 20V, DPWM = 9%, V_{CTL} = 0)

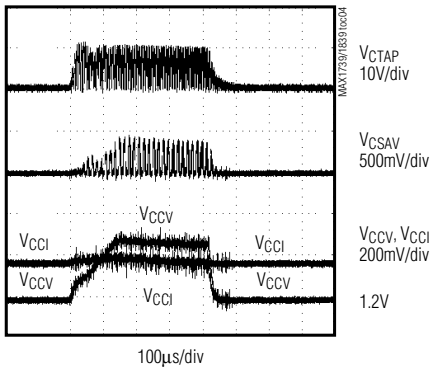

FEED-FORWARD COMPENSATION

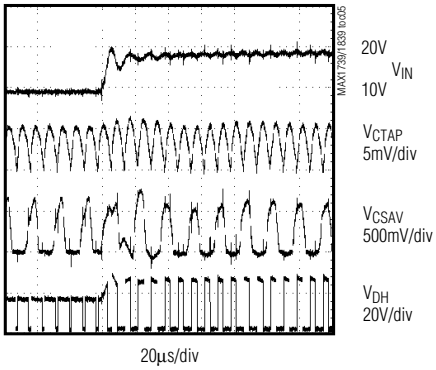

SWITCHING WAVEFORMS

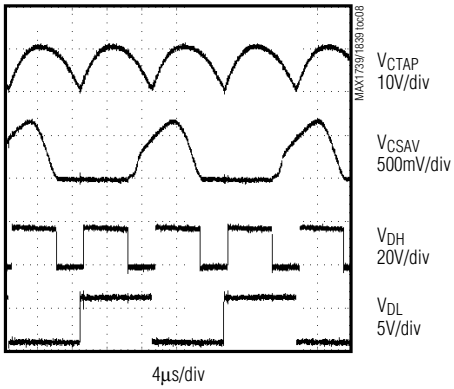

Typical Operating Characteristics (continued)

(V_{IN} = 12V, V_{CTL} = V_{CRF}, V_{MINDAC} = 1V, MODE = GND, Circuit of Figure 8.)

SYNCHRONIZED DPWM
(f_{MODE} = 100kHz, V_{CTL} = V_{CRF}/2)

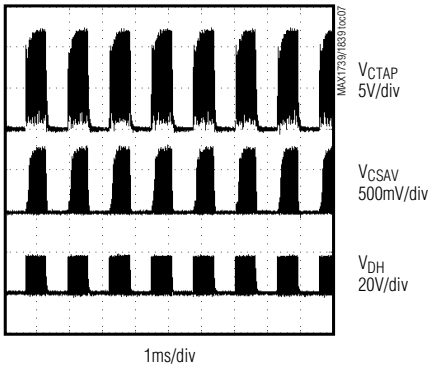

SYNCHRONIZED DPWM
(f_{MODE} = 32kHz, V_{CTL} = V_{CRF}/2)

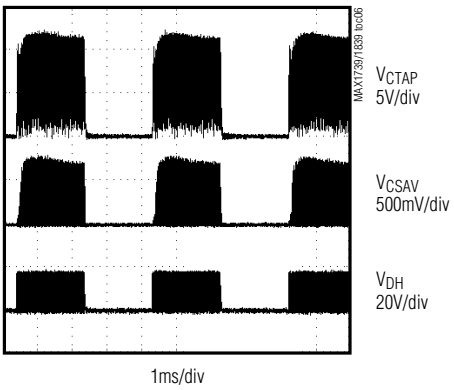

STARTUP
(ADC SOFT-START, MODE = GND)

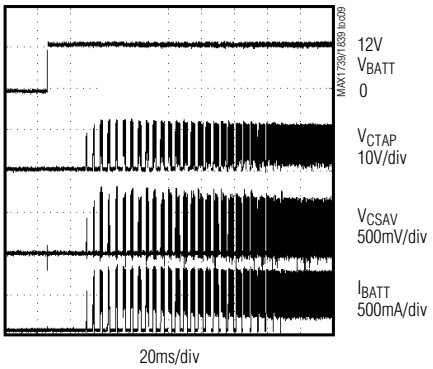

LAMP-OUT VOLTAGE LIMITING

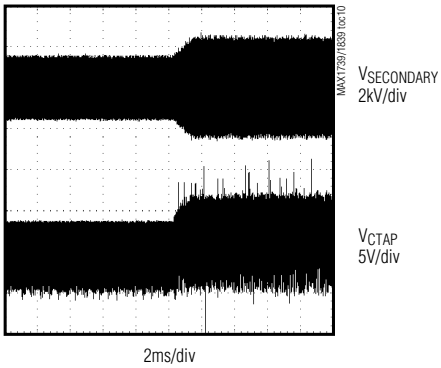

LAMP-OUT VOLTAGE LIMITING

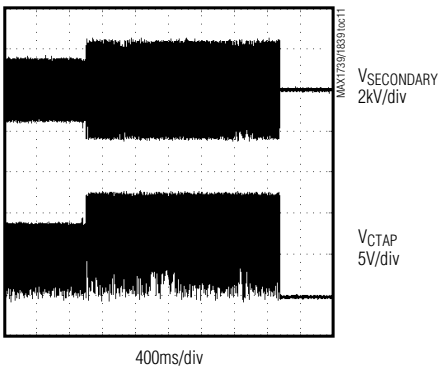

INPUT CURRENT vs. INPUT VOLTAGE

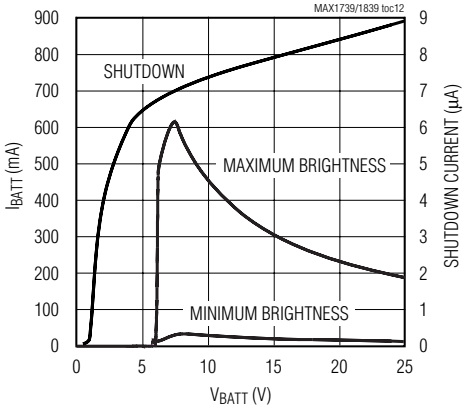

Wide Brightness Range CCFL Backlight Controllers

Typical Operating Characteristics (continued)

(V_{IN} = 12V, V_{CTL} = V_{CRF}, V_{MINDAC} = 1V, MODE = GND, Circuit of Figure 8.)

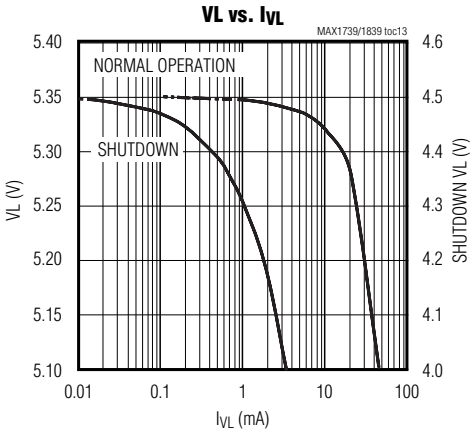

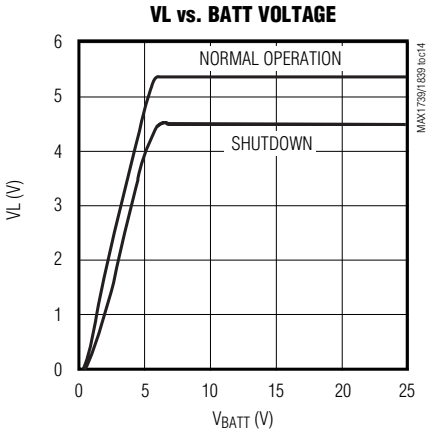

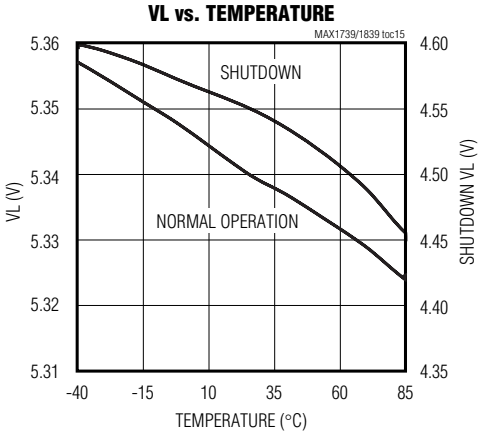

Pin Description

PIN	NAME		FUNCTION
	MAX1739	MAX1839	
1	REF	REF	2V Reference Output. Bypass to GND with 0.1µF. Forced low during shutdown.
2	MINDAC	MINDAC	DAC Zero-Scale Input. V_{MINDAC} sets the DAC's minimum scale output voltage. Disable DPWM by connecting MINDAC to VL.
3	CCI	CCI	GMI Output. Output of the current loop GMI amplifier that regulates the CCFL current. Typically bypass to GND with 0.1µF.
4	CCV	CCV	GMV Output. Output of the voltage loop GMV amplifier that regulates the maximum average primary transformer voltage. Typically bypass to GND with 3300pF.
5	$\overline{SH}$/SUS	$\overline{SH}$	Logic Low Shutdown Input in Analog Interface Mode. SMBus suspends input in SMBus interface mode (MAX1739 only).
6	CRF/SDA	CRF	5-Bit ADC Reference Input in Analog Interface Mode. Bypass to GND with 0.1µF. SMBus serial data input/open-drain output (MAX1739 only) in SMBus interface mode.
7	CTL/SCL	CTL	CCFL Brightness Control Input in Analog Interface Mode. SMBus serial clock input (MAX1739 only) in SMBus interface mode.
8	MODE	MODE	Interface Selection Input and Sync Input for DPWM Chopping (see *Synchronizing the DPWM Frequency*). The average voltage on the MODE pin selects one of three CCFL brightness control interfaces: 1) MODE = VL, enables SMBus serial interface (MAX1739 only). 2) MODE = GND, enables the analog interface (positive scale analog interface mode); $V_{CTL/SCL}$ = 0 means minimum brightness. 3) MODE = REF, enables the analog interface (negative scale analog interface mode); $V_{CTL/SCL}$ = 0 means maximum brightness.
9	CSAV	CSAV	Current-Sense Input. Input to the GMI error amplifier that drives CCI.
10	CTFB	CTFB	Center-Tap Voltage Feedback Input. The average V_{CTFB} is limited to 0.6V.
11	SYNC	SYNC	Royer Synchronization Input. Falling edges on SYNC force DH on and toggle the DL1 and DL2 drivers. Connect directly to the Royer center tap.
12	DL2	DL2	Low-Side N-Channel MOSFET 2 Gate Drive. Drives the Royer oscillator switch. DL1 and DL2 have make-before-break switching, where at least one is always on. Falling edges on SYNC toggle DL1 and DL2 and turn DH on.
13	DL1	DL1	Low-Side N-Channel MOSFET 1 Gate Drive
14	CS	CS	Current-Sense Input (Current Limit). The current-mode regulator terminates the switch cycle when V_{CS} exceeds (V_{REF} - V_{CCI}).
15	GND	GND	System Ground
16	VL	VL	5.3V Linear Regulator Output. Supply voltage for most of the internal circuits. Bypass with 1µF capacitor to GND. Can be connected to V_{BATT} if V_{BATT} < 5.5V.
17	BST	BST	High-Side Driver Bootstrap Input. Connect through a diode to VL and bypass with 0.1µF capacitor to LX.
18	LX	LX	High-Side Driver Ground Input
19	DH	DH	High-Side Gate Driver Output. Falling edges on SYNC turn on DH.
20	BATT	BATT	Supply Input. Input to the internal 5.3V linear regulator that powers the chip.

Wide Brightness Range CCFL Backlight Controllers

Detailed Description

The MAX1739/MAX1839 regulate the brightness of a CCFL in three ways:

1) Linearly controlling the lamp current.

2) Digitally pulse-width modulating (or chopping) the lamp current (DPWM).

3) Using both methods simultaneously for widest dimming range.

DPWM is implemented by pulse-width modulating the lamp current at a rate faster than the human eye can detect. Figure 1 shows the current and voltage waveforms for the three operating modes with the brightness control set to 50% of full scale.

The MAX1739/MAX1839 include a 5.3V linear regulator to power most of the internal circuitry, drivers for the buck and Royer switches, and the synchronizable DPWM oscillator. The MAX1739/MAX1839 are very flexible and include a variety of operating modes, an analog interface, an SMBus interface (MAX1739 only), a shutdown mode, lamp-out detection, and buck-switch short detection.

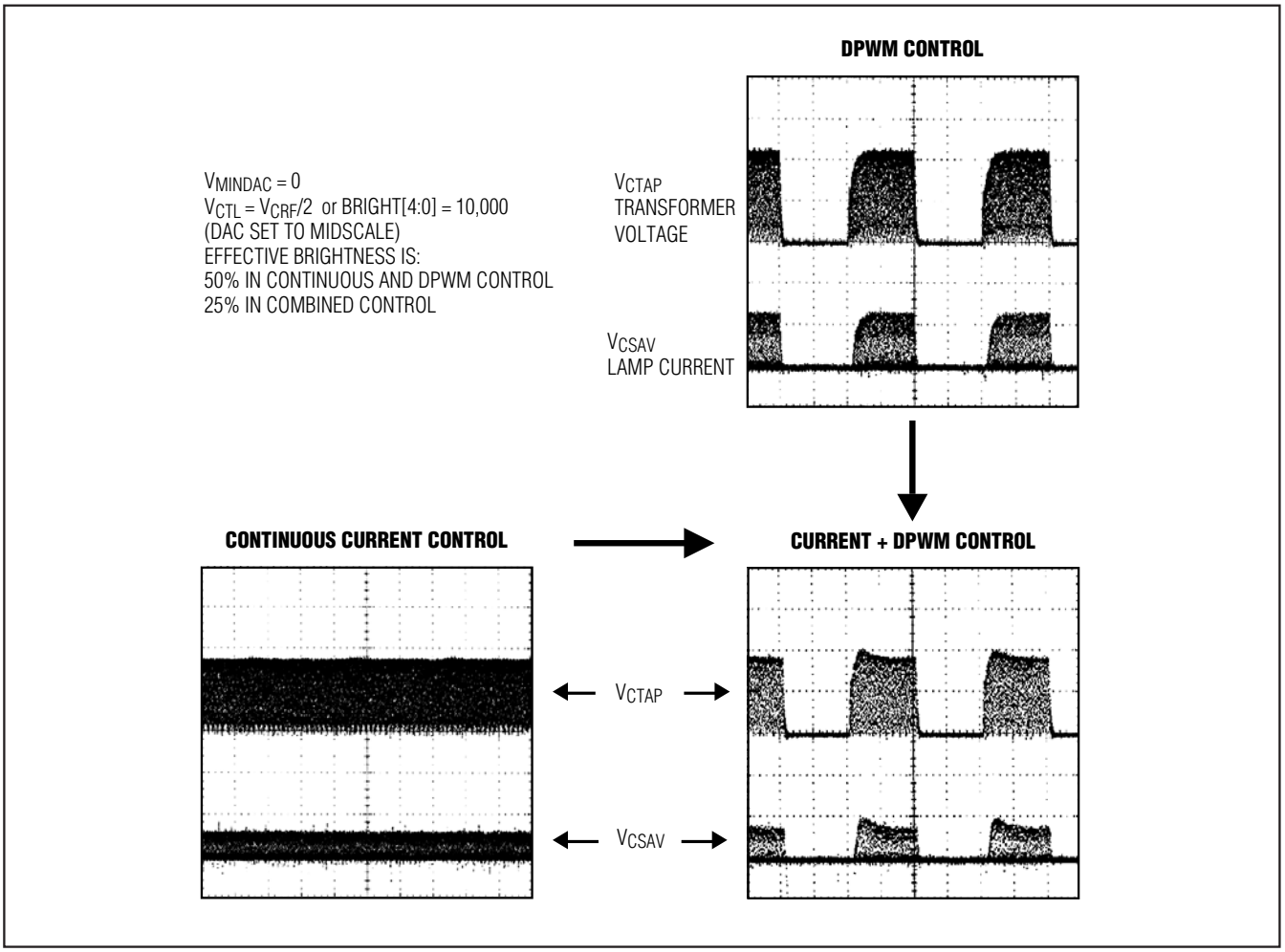

Figure 1. Brightness Control Methods

Voltage and Current Control Loops

The MAX1739/MAX1839 use two control loops. The current control loop regulates the average lamp current. The voltage control loop limits the maximum average primary-side transformer voltage. The voltage control loop is active during the beginning of DPWM on-cycles and in some fault conditions. Limiting the transformer primary voltage allows for a lower transformer secondary voltage rating that can increase reliability and decrease cost of the transformer. The voltage control loop acts to limit the transformer voltage any time the current control loop attempts to steer the transformer voltage above its limit as set by V_{CTFB} (see *Sense Resistors*).

The voltage control loop uses a transconductance amplifier to create an error current based on the voltage between CTFB and the internal reference level (600mV typ) (Figure 2). The error current is then used to charge and discharge C_{CCV} to create an error voltage V_{CCV}. The current control loop produces a similar signal based on the voltage between CSAV and its internal reference level (see the *Dimming Range* section). This error voltage is called V_{CCI}. The lower of V_{CCV} and V_{CCI} is used with the buck regulator's PWM ramp generator to set the buck regulator's duty cycle.

During DPWM, the two control loops work together to limit the transformer voltage and to allow wide dimming range with good line rejection. During the DPWM off-cycle, V_{CCV} is set to 1.2V and CCI is set to high impedance. V_{CCV} is set to 1.2V to create soft-start at the beginning of each DPWM on-cycle in order to avoid overshoot on the transformer primary. V_{CCI} is set to high impedance to keep V_{CCI} from changing during the off-cycles. This allows the current control loop to regulate the average lamp current only during DPWM on-cycles and not the overall average lamp current.

Upon power-up, V_{CCI} slowly rises, increasing the duty cycle, which provides soft-start. During this time, V_{CCV}, which is the faster control loop, is limited to 150mV above V_{CCI} by the CCV-CLAMP. Once the secondary voltage reaches the strike voltage, the lamp current begins to increase. When the lamp current reaches the regulation point, V_{CCI} reaches steady state. With MINDAC = VL (DPWM disabled), the current control loop remains in control and regulates the lamp current.

With MINDAC between REF and GND, DPWM is enabled and the MAX1739/MAX1839 begin pulsing the lamp current. During the on-cycle, V_{CCV} is at 150mV above V_{CCI}. After the on-cycle, V_{CCV} is forced down to 1.2V to provide soft-start at the beginning of the next on-cycle. Also, V_{CCI} retains its value until the beginning of the next on-cycle. When V_{CCV} increases, it causes the buck regulator duty cycle to increase and provides soft-start. When V_{CCV} crosses over V_{CCI}, the current control loop regains control and regulates the lamp current. V_{CCV} is limited to 150mV above V_{CCI} for the remainder of the on-cycle.

In a lamp-out condition, V_{CCI} increases the primary voltage in an attempt to maintain lamp current regulation. As V_{CCI} rises, V_{CCV} rises with it until the primary voltage reaches its set limit point. At this point, V_{CCV} stops rising and limits the primary voltage by limiting the duty cycle. Because V_{CCV} is limited to 150mV above V_{CCI}, the voltage control loop is quickly able to limit the primary voltage. Without this clamping feature, the transformer voltage would overshoot to dangerous levels because V_{CCV} would take more time to slew down from its supply rail. Once the MAX1739/MAX1839 sense less than 1/6 the full-scale current through the lamp for 2 seconds, it shuts down the Royer oscillator (see *Lamp-Out Detection*).

See the *Sense Resistors* section for information about setting the voltage and current control loop thresholds.

Feed-Forward Control

Both control loops are influenced by the input voltage feed-forward (V_{BATT}) control circuitry of the MAX1739/MAX1839. Feed-forward control instantly adjusts the buck regulator's duty cycle when it detects a change in input voltage. This provides immunity to changes in input voltage at all brightness levels. This feature makes compensation over wide input ranges easier, makes startup transients less dependent on input voltage, and improves line regulation for short DPWM on-times.

The MAX1739/MAX1839 feed-forward control is implemented by varying the amplitude of the buck-switch's PWM ramp amplitude. This has the effect of varying the duty cycle as a function of input voltage while maintaining the same V_{CCI} and V_{CCV}. In other words, V_{BATT} feed forward has the effect of not requiring changes in error-signal voltage (V_{CCI} and V_{CCV}) to respond to changes in V_{BATT}. Since the capacitors only need to change their voltage minimally to respond to changes in V_{BATT}, the controller's response is essentially instantaneous.

Transient Overvoltage Protection from Dropout

The MAX1739/MAX1839 are designed to maintain tight control of the transformer primary under all transient conditions. This includes transients from dropout, where V_{BATT} is so low that the controller loses regulation and reaches maximum duty cycle. Backlight designs will want to choose circuit component values to minimize the transformer turns ratio in order to minimize primary-side currents and I^2R losses. To achieve this,

Wide Brightness Range CCFL Backlight Controllers

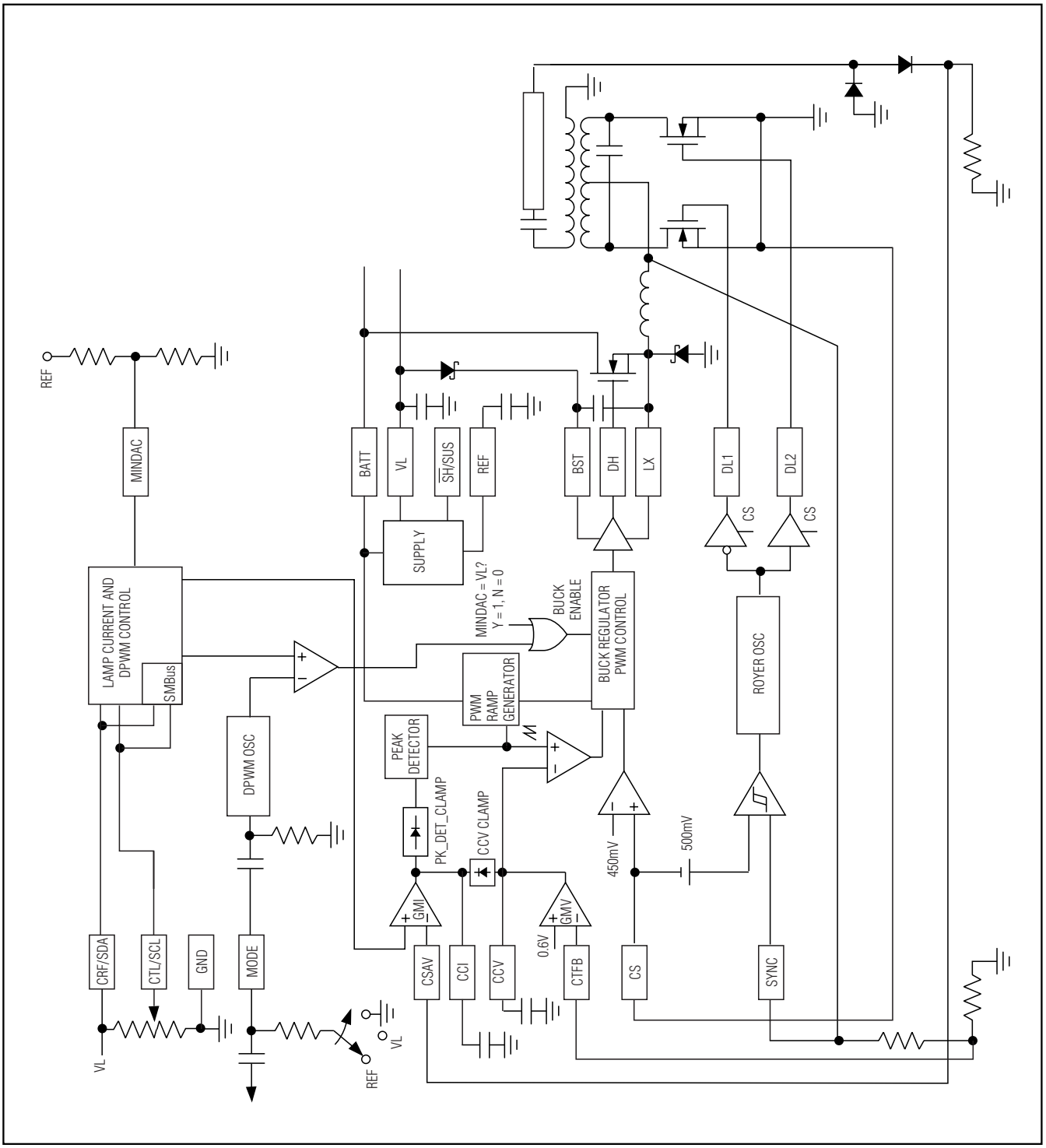

Figure 2. Functional Diagram

allow the circuit to operate in dropout at extremely low battery voltages where the backlight's performance is secondary. All backlight circuit designs can undergo a transient overvoltage condition when the laptop is plugged into the AC adapter and V_{BATT} suddenly increases. The MAX1739/MAX1839 contain a unique clamp circuit on V_{CCI}. Along with the feed-forward circuitry, it ensures that there is not a transient transformer overvoltage when leaving dropout.

The PK_DET_CLAMP circuit limits V_{CCI} to the peaks of the buck-regulator's PWM ramp generator. As the circuit reaches dropout, V_{CCI} approaches the peaks of the PWM ramp generator in order to reach maximum duty cycle. If V_{BATT} decreases further, the control loop loses regulation and V_{CCI} tries to reach its positive supply rail. The clamp circuit on V_{CCI} keeps this from happening, and V_{CCI} rides just above the peaks of the PWM ramp. As V_{BATT} decreases further, the feed-forward PWM ramp generator loses amplitude and the clamp drags V_{CCI} down with it to a voltage below where V_{CCI} would have been if the circuit was not in dropout. When VBATT is suddenly increased out of dropout, V_{CCI} is still low and maintains the drive on the transformer at the old dropout level. The circuit then slowly corrects and increases V_{CCI} to bring the circuit back into regulation.

Buck Regulator

The buck regulator uses the signals from the PWM comparator, the current-limit detection on CS, and DPWM signals to control the high-side MOSFET duty cycle. The regulator uses voltage-mode PWM control and is synchronized to the Royer oscillator. A falling edge on SYNC turns on the high-side MOSFET after a 375ns minimum off-time delay. The PWM comparator or the CS current limit ends the on-cycle.

Interface Selection

Table 1 lists the functionality of $\overline{SH}$/SUS, CRF/SDA, and CTL/SCL in each of the three interface modes of the MAX1739/MAX1839. The MAX1739 features both an SMBus digital interface and an analog interface, while the MAX1839 features only the analog interface. Note that MODE can also synchronize the DPWM frequency (see *Synchronizing the DPWM Frequency*).

Dimming Range

Brightness is controlled by either the analog interface (see *Analog Interface*) or the SMBus interface (see *SMBus Interface*). CCFL brightness is adjusted in three ways:

1) Lamp current control, where the magnitude of the average lamp current is adjusted.

2) DPWM control, where the average lamp current is pulsed to the lamp with a variable duty cycle.

3) A combination of the first two methods.

In each of the three methods, a 5-bit brightness code is generated from the selected interface and is used to set the lamp current and/or DPWM duty cycle.

The 5-bit brightness code defines the lamp current level with ob00000 representing minimum lamp current and ob11111 representing maximum lamp current. The average lamp current is measured across an external sense resistor (see *Sense Resistors*). The voltage on the sense resistor is measured at CSAV. The brightness code adjusts the regulation voltage at CSAV (V_{CSAV}). The minimum average V_{CSAV} is $V_{MINDAC}/10$, and the maximum average is set by the following formula:

$$V_{CSAV} = V_{REF} \times 31 / 320 + V_{MINDAC} / 320$$

which is between 193.75mV and 200mV.

Note that if V_{CSAV} does not exceed 100mV peak (which is about 32mV average) for over 2 seconds, the MAX1739/MAX1839 will assume a lamp-out condition and shut down (see *Lamp-Out Detection*).

The equation relating brightness code to C_{SAV} regulation voltage is:

$$V_{CSAV} = V_{REF} \times n / 320 + V_{MINDAC} \times (32 - n) / 320$$

where n is the brightness code.

To always use maximum average lamp current when using DPWM control, set V_{MINDAC} to V_{REF}.

DPWM control works similar to lamp current control in that it also responds to the 5-bit brightness code. A

Table 1. Interface Modes

PIN	DIGITAL INTERFACE	ANALOG INTERFACE	
	MODE = VL (MAX1739 only)	MODE = REF, V_{CTL}/SCL = 0 = maximum brightness	MODE = GND, V_{CTL}/SCL = 0 = minimum brightness
$\overline{SH}$/SUS	SMBus suspend	Logic-level shutdown control input	
CRF/SDA	SMBus data I/O	Reference input for minimum brightness	Reference input for maximum brightness
CTL/SCL	SMBus clock input	Analog control input to set brightness (range from 0 to CRF/SDA)	

Wide Brightness Range CCFL Backlight Controllers

brightness code of ob00000 corresponds to a 9.375% DPWM duty cycle, and a brightness code of ob11111 corresponds to a 100% DPWM duty cycle. The duty cycle changes by 3.125% per step, except codes ob00000 to ob00011 all produce 9.375% (Figure 3).

To disable DPWM and always use 100% duty cycle, set V_{MINDAC} to VL. Note that with DPWM disabled, the equations above should assume V_{MINDAC} = 0 instead of V_{MINDAC} = VL. Table 2 lists MINDAC's functionality, and Table 3 shows some typical settings for the brightness adjustment.

In normal operation, V_{MINDAC} is set between 0 and V_{REF}, and the MAX1739/MAX1839 use both lamp current control and DPWM control to vary the lamp brightness (Figure 4). In this mode, lamp current control regulates the average lamp current during a DPWM on-cycle and not the overall average lamp current.

Analog Interface and Brightness Code

The MAX1739/MAX1839 analog interface uses an internal ADC with 1-bit hysteresis to generate the brightness code used to dim the lamp (see *Dimming Range*). CTL/SDA is the ADC's input, and CRF/SCL is its reference voltage. The ADC can operate in either positive-scale ADC mode or negative-scale ADC mode. In positive-scale ADC mode, the brightness code increases from 0 to 31 as V_{CTL} increases from 0 to V_{CRF}. In negative-scale mode, the brightness scale decreases from 31 to 0 as V_{CTL} increases from 0 to V_{CRF} (Figure 5).

The analog interface's internal ADC uses 1-bit hysteresis to keep the lamp from flickering between two codes. V_{CTL}'s positive threshold ($V_{CTL(TH)}$) is the voltage required to transition the brightness code as V_{CTL} increases and can be calculated as follows:

$$V_{CTL(TH)} = (n + 2) / 33\ V_{CRF}$$
(positive-scale ADC mode, MODE = GND)

$$V_{CTL(TH)} = (33 - n) / 33\ V_{CRF}$$
(negative-scale ADC mode, MODE = REF)

where n is the current selected brightness code. V_{CTL}'s negative threshold is the voltage required to transition the brightness code as V_{CTL} decreases and can be calculated as follows:

$$V_{CTL(TH)} = n / 33\ V_{CRF}$$
(positive-scale ADC mode, MODE = GND)

$$V_{CTL(TH)} = (31 - n) / 33\ V_{CRF}$$
(negative-scale ADC mode, MODE = REF)

Figure 5 shows a graphic representation of the thresholds. CRF/SDA's and CTL/SCL's input voltage range is 2.7V to 5.5V.

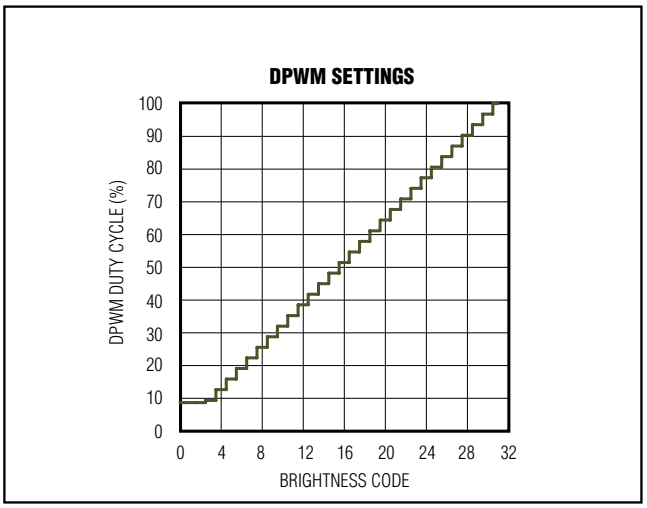

Figure 3. DPWM Settings

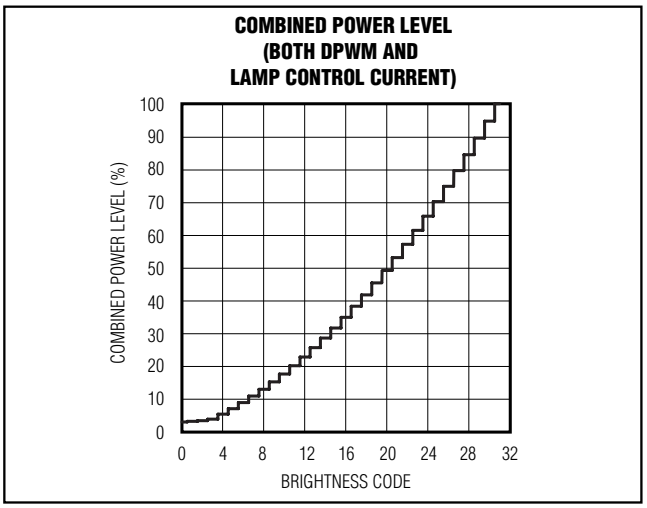

Figure 4. Combined Power Level

Table 2. MINDAC Functionality

MINDAC = VL	DPWM disabled (always on 100% duty cycle). Operates in lamp current control only. (Use V_{MINDAC} = 0 in the equations.)
MINDAC = REF	DPWM control enabled, duty cycle ranges from 9% to 100%. Lamp current control is disabled (always maximum current).
$0 \le V_{MINDAC} < V_{REF}$	The device uses both lamp current control and DPWM.

Table 3. Brightness Adjustment Ranges (for 33:1 Dimming)

BRIGHTNESS	POSITIVE-SCALE ADC	NEGATIVE-SCALE ADC	SMBus	DAC OUTPUT	DPWM DUTY CYCLE (%)	COMBINED POWER LEVEL (%)
Maximum Brightness	MODE = GND, $V_{CTL/SCL}$ = $V_{CRF/SDA}$	MODE = REF, $V_{CTL/SCL}$ = 0	Bright [4:0] = ob11111	Full-scale DAC OUTPUT = 195.83mV	100	100
Minimum Brightness	MODE = GND, $V_{CTL/SCL}$ = 0, V_{MINDAC} = VREF/3	MODE = REF, $V_{CTL/SCL}$ = $V_{CRF/SDA}$, V_{MINDAC} = VREF/3	Bright [4:0] = ob00000, V_{MINDAC} = VREF/3	Zero-scale DAC OUTPUT = V_{MINDAC} / 10	9	3

Note: *The current-level range is solely determined by the MINDAC-to-REF ratio and is externally set.*

See *Digital Interface* for instructions on using the SMBus interface.

Synchronizing the DPWM Frequency

MODE has two functions: one is to select the interface mode as described in *Interface Selection*, and the other is to synchronize the DPWM "chopping" frequency to an external signal to prevent unwanted effects in the display screen.

To synchronize the DPWM frequency, connect MODE to VL, REF, or GND through a 10kΩ resistor. Then connect a 500pF capacitor from an AC signal source to MODE as shown in Figure 6. The synchronization range is from 32kHz to 100kHz, which corresponds to a DPWM frequency range of 250Hz to 781Hz (128 MODE pulses per DPWM cycle). High DPWM frequencies limit the dimming range. See *Loop Compensation* for more information concerning high DPWM frequencies.

Royer Oscillator MOSFET Drivers

The MAX1739/MAX1839 directly drive the two external MOSFETs used in the Royer oscillator. This has many advantages over the traditional method that uses bipolar switching and an extra winding on the transformer. Directly driving the MOSFET eliminates the need for an extra winding on the transformer, which reduces cost and minimizes the size of the transformer. Also, driving the switches directly improves commutation efficiency and commutation timing. Using MOSFETs for the switches typically improves overall inverter efficiency due to lower switch drops.

The Royer topology works as a zero voltage crossing (ZVC) detector and switches currents between the two sections of the transformer primary windings. The two windings work alternately, each generating a half wave that is transferred to the secondary to produce the full-wave sinusoidal lamp voltage and current. The MAX1739/MAX1839 detect the zero crossing through the SYNC pin; the threshold is set at 500mV referred to CS and has a typical delay of 50ns. The active switching forces commutation very close to the ZVC point and has better performance than the traditional winding-based ZVC switchover. Commutation can be further

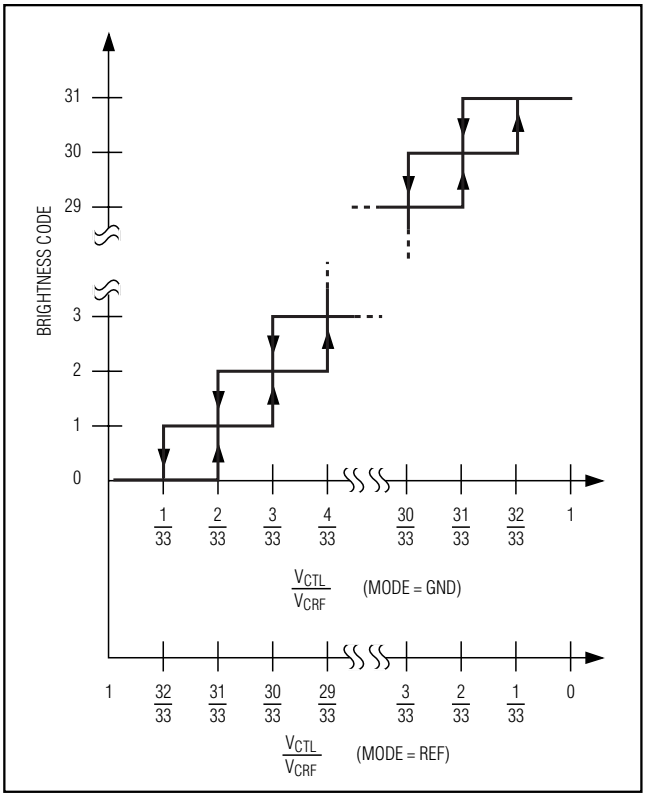

Figure 5. Brightness Code

Wide Brightness Range CCFL Backlight Controllers

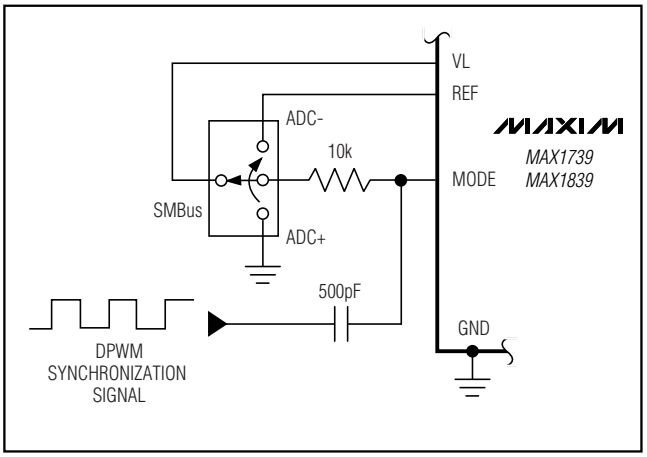

Figure 6. DPWM Synchronization

optimized using R14 and R15 as shown in Figure 7. The resistor-divider can be used to force commutation as close to the zero-crossing point as possible.

POR and UVLO

The MAX1739/MAX1839 include power-on reset (POR) and undervoltage lockout (UVLO) features. The POR resets all internal registers, such as DAC output, fault conditions, and all SMBus registers. POR occurs when VL is below 1.5V. The SMBus input logic thresholds are designed to meet electrical characteristic limits for VL as low as 3.5V, but the interface will continue to function down to the POR threshold.

The UVLO threshold occurs when VL is below 4.2V (typ) and disables the buck-switch driver.

Low-Power Shutdown

When the MAX1739/MAX1839 are placed in shutdown, all IC functions are turned off except the 5V linear regulator that powers all internal registers and the SMBus interface (MAX1739). The SMBus interface is accessible in shutdown. In shutdown, the linear regulator output voltage drops to about 4.5V and the supply current is 6µA (typ), which is the required power to maintain all internal register states. While in shutdown, lamp-out detection and buck-switch short-circuit detection latches are reset. The device can be placed into shutdown by either writing to the MODE register (MAX1739 SMBus mode only) or with $\overline{SH}$/SUS.

Lamp-Out Detection

For safety, during a lamp-out condition, the MAX1739/MAX1839 limit the maximum average primary-side transformer voltage (see *Sense Resistors*) and shut down the lamp after 2s.

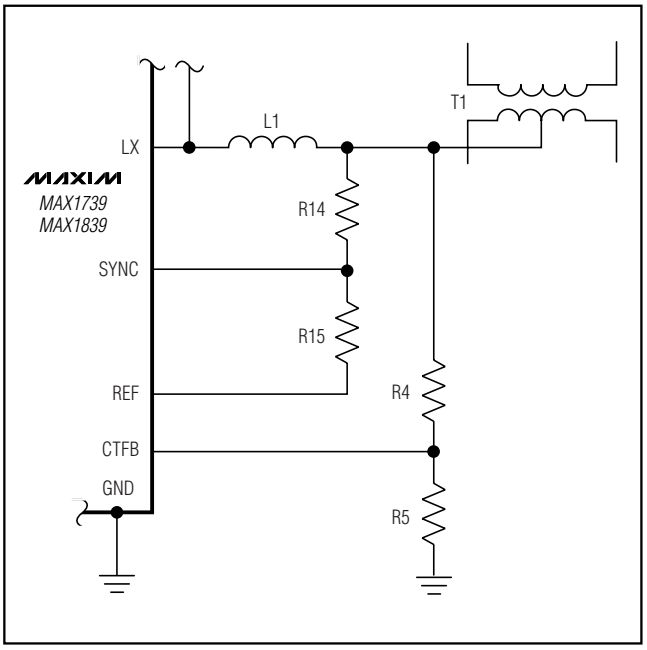

Figure 7. Adjusting the ZVC Detection

The lamp-out detection circuitry monitors V_{CSAV} and shuts down the lamp if V_{CSAV} does not exceed 75mV (typ) within 2 seconds. This circuitry ignores most pulses under 200ns. However, in some cases, a small capacitor is needed at CSAV to prevent noise from tripping the circuitry. This is especially true in noisy environments and in designs with marginal layout.

Ideally, the voltage at CSAV is a half-wave rectified sine wave. In this case, the CSAV lamp-out threshold is as follows:

$$I_{MIN} = I_{MAX} / 6$$

where I_{MIN} is the CSAV lamp out threshold, and I_{MAX} is the maximum lamp current (see *Sense Resistors*). *Note:* The formulas assume a worst-case CSAV lamp-out threshold of 100mV and a maximum CSAV average voltage of 200mV.

Use MINDAC or limit the brightness code to prevent setting the lamp current below the CSAV lamp-out threshold.

STATUS1 bit sets when the lamp-out detection circuit shuts down the device.

Buck-Switch Short Fault Detection and Protection

When the buck switch (N1) fails short, there is no voltage limiting on the transformer and the input forces excessive voltage on the transformer secondary. This

increases the circuit's demand for current but may not be enough to blow the fuse. With the buck switch shorted, the center tap rises above its regulation point, which causes the CCV amplifier's output (V_{CCV}) to go low. To detect this, the MAX1739/MAX1839 check that V_{CCV} is below 1V at the end of every DPWM period. If this condition persists for over 250ms (or 64 DPWM pulses), the inverter switch commutation is stopped with either DL1 or DL2 on. With the buck switch shorted, this will cause a short circuit with enough current to blow the fuse. If the buck switch is not shorted, then the inverter latches off as in a lamp-out condition.

Both buck-switch short and lamp-out detection will clear the STATUS1 bit in the SMBus interface. STATUS1 does not clear immediately but will clear about 2 seconds after the inverter has been forced off (see *Digital Interface*).

Note that once the inverter board fuse has blown, SMBus communications with the part will cease since the MAX1739 will then be without power.

Applications Information

As shown in the standard application circuit (Figure 8), the MAX1739/MAX1839 regulate the current of a 4.5W CCFL. The IC's analog voltage interface sets the lamp brightness with a minimum 20:1 power adjustment range. This circuit operates from a wide supply-voltage range of 7V to 24V. Typical applications include notebook, desktop monitor, and car navigation displays.

CCFL Specifications

To select the correct component values for the MAX1739/MAX1839 circuit, several CCFL parameters (Table 4) and the minimum DC input voltage must be specified.

Royer Oscillator

Components T1, C6, C7, N2A, and N2B form the Royer oscillator. A Royer oscillator is a resonant tank circuit that oscillates at a frequency dependent on C7, the primary magnetizing inductance of T1 (LP), and the impedance seen by the T1 secondary. Figure 8 shows

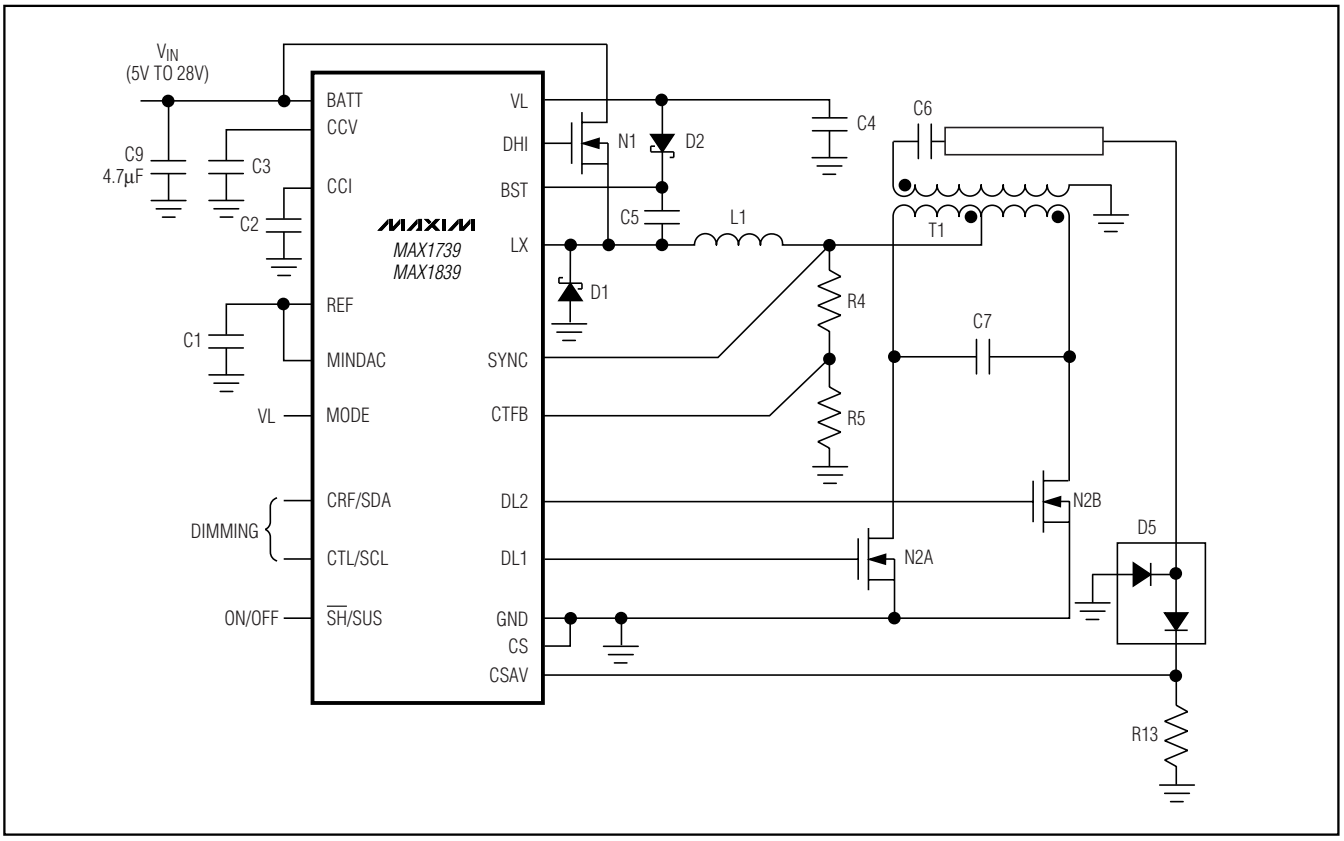

Figure 8. Standard Application Circuit

Wide Brightness Range CCFL Backlight Controllers

a proven application that is useful for a wide range of CCFL tubes and power ranges. Table 5 shows the recommended components for a 4.5W application.

MOSFETs

The MAX1739/MAX1839 require three external switches to operate: N1, N2A, and N2B. N1 is the buck switch; select a logic-level N-channel MOSFET with low R_{DSON} to minimize conduction losses (100mΩ, 30V typ). Also select a comparable-power Schottky diode for D1. N2A/N2B are the Royer oscillator switches that drive the transformer primary; select a dual-logic-level N-channel MOSFET with low R_{DSON} to minimize conduction losses (100mΩ, 30V typ).

Sense Resistors

R4 and R5 sense the transformer's primary voltage. Figure 9 shows the relationship between the primary and secondary voltage. To set the maximum average secondary transformer voltage, set R5 = 10kΩ, and select R5 according to the following formula:

$$R4 = R5\left(\frac{1.5V_{S(RMS)}}{N} - 1\right)$$

where V_S is the maximum RMS secondary transformer voltage (above the strike voltage), and N is the turns ratio of the transformer.

Table 4. CCFL Specifications

SPECIFICATION	SYMBOL	UNITS	DESCRIPTION
CCFL Minimum Strike Voltage (Kick-Off Voltage)	V_S	V_{RMS}	Although CCFLs typically operate at <550V_{RMS}, a higher voltage (1000V_{RMS} and up) is required initially to start the tube. The strike voltage is typically higher at cold temperatures and at the tube's end of life. This voltage is set by the combination of the maximum primary voltage (center-tap voltage limit corresponding to V_{CTFB} = 0.6V) and the transformer (T1) turns ratio.
CCFL Typical Operating Voltage (Lamp Voltage)	V_L	V_{RMS}	Once a CCFL has been struck, the voltage required to maintain light output falls to approximately 550V_{RMS}. Short tubes may operate on as little as 250V_{RMS}. The CCFL operating voltage stays relatively constant, even as the tube's brightness is varied.
CCFL Maximum Operating Current (Lamp Current)	I_L	mA_{RMS}	The maximum RMS AC current through a CCFL is typically 5mA_{RMS}. DC current is not allowed through CCFLs. The maximum lamp current is set by the sense resistor (R13) at the maximum brightness setting.
CCFL Maximum Frequency (Lamp Frequency)	f_L	kHz	The maximum AC-lamp-current frequency. The MAX1739/ MAX1839 synchronize to the Royer oscillator frequency set by the external components and are designed to operate between 32kHz and 100kHz.

Table 5. Components for the Standard Application Circuit

DESIGNATION	DESCRIPTION	RECOMMENDED DEVICE	MANUFACTURER
L1	47µH, 1.1A inductor	CR104-470	Sumida
N1	30V, 0.1Ω N-channel MOSFET	FDN361AN	Fairchild
N2	30V, 95mΩ dual N-channel MOSFET	FDC6561AN	Fairchild
T1	8.7µH, 180:1 transformer	5371-T001 (CIUH842 style)	Sumida
D1	30V, 1A Schottky diode	CRS02	Toshiba
D2	0.1A Schottky diode	BAT54	Fairchild
D3	0.1A dual Schottky diode	MMBD4148SE	Fairchild
C6	22pF, 3.1kV capacitor	GHM1038-SL-220J-3K	Murata
C7	0.1µF, 63V, low-dissipation capacitor	SMD1812	WIMA

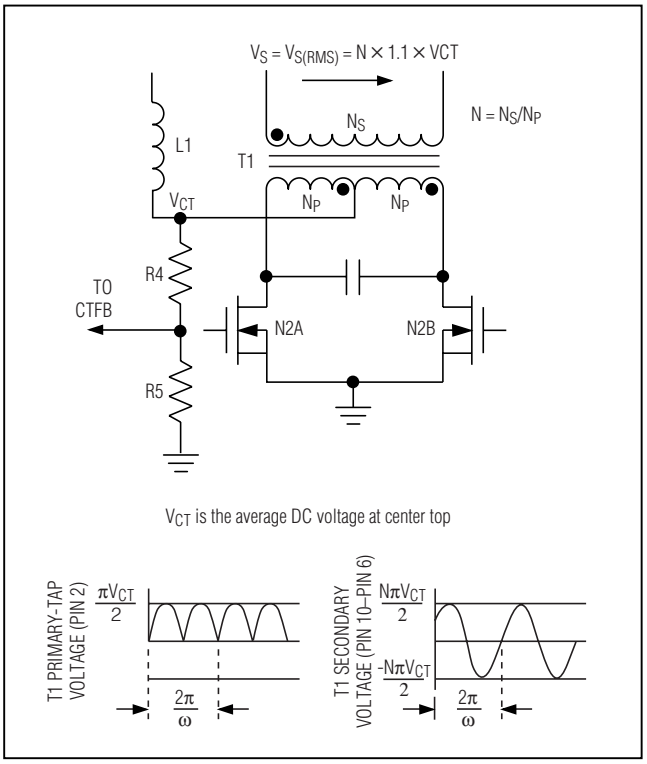

Figure 9. Transformer Primary/Secondary Voltage Relationship

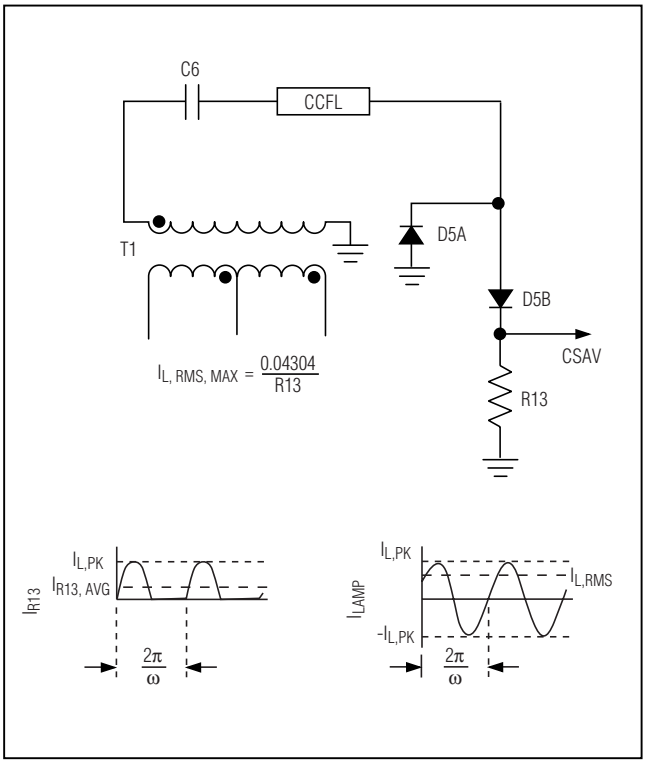

Figure 10. Current-Sense Waveforms

The MAX1739/MAX1839 regulate the average current through the CCFL. The current is sensed through the sense resistor (R13) at CSAV. The voltage at CSAV is the half-wave rectified representation of the current through the lamp (Figure 10). The MAX1739/MAX1839 regulate the average voltage at CSAV ($I_{R13,\ AVG} \times R13$) and are controlled by either the analog interface or the SMBus interface. To set the maximum lamp current, determine R13 as follows:

$$R13 = 0.4304 / I_{L,RMS,MAX}$$

where $I_{L,RMS,MAX}$ is the maximum RMS lamp current. MINDAC and the wave shape influence the actual maximum RMS lamp current. Use an RMS current meter to make final adjustments to R13.

Loop Compensation

C_{CCI} sets the speed of the current control loop that is used during startup, maintaining lamp current regulation, and during transients caused by changing the lamp current setting. The standard C_{CCI} value is 0.01µF. Larger values limit lamp current overshoot. Smaller values speed up its response to changes in the lamp current setting, but can lead to instability for extremely small values. Very large values of C_{CCI} increase the delay to strike voltage in DPWM and can cause loss of regulation in the extreme case. Note that very large C_{CCV} can do the same thing.

C_6 not only affects loop compensation, but it also affects the waveform shape, overall efficiency, and the maximum necessary secondary transformer voltage. Low values of C_6 improve loop stability, especially in systems using a CCFL with a large difference between its restrike voltage and its operating voltage (characteristic of long narrow CCFLs) during DPWM. A low value of C_6 also improves stability when the lamp's operating voltage drops with an increase in lamp current. However, low values of C_6 increase the maximum necessary transformer voltage. C_7 interacts with C_6 and affects the Royer frequency, Royer Q value, and overall efficiency.

C_{CCV} sets the speed of the voltage control loop that affects DPWM transients and operation in fault conditions. If DPWM is not used, the voltage control loop should only be active during fault conditions. The standard value of C_{CCV} is 3300pF. Use the smallest value of C_{CCV} necessary to set an acceptable fault transient response and not cause excessive ringing at the beginning of a DPWM pulse. Note that the worst-case fault

transient that C_{CCV} is designed to protect against is open tube at the beginning of DPWM pulses.

Large C_{CCV} values reduce transient overshoots, but can cause loss of regulation at low DPWM duty cycles by increasing the delay to strike voltage. Smaller values of C_{CCV} allow quicker DPWM startups and faster response to fault conditions. Very small values of C_{CCV} make the circuit more susceptible to ringing, and in extreme cases may cause instability. Some ringing is expected between the Royer oscillator and the buck inductor. Some of the ringing can be suppressed by adding a capacitor in parallel with R5. This capacitor should be chosen such that:

$$1 / (2 \times \pi \times R5 \times C) = \text{ringing frequency}$$

When using high DPWM frequencies and low DPWM duty cycles, the DPWM on-time is reduced. In some cases, this causes the lamp current transient to exceed the DPWM on-time. In this case, the MAX1739/MAX1839 lose regulation and the lamp current never reaches the lamp current set point. Supply rejection while operating in this condition is degraded. If the DPWM on-time is short enough, the lamp current does not have enough time to reach the lamp-out threshold and causes a lamp-out detection. To prevent this, decrease the turn-on transient duration (by lowering C_{CCV}), increase the DPWM duty cycle (by limiting the brightness code), or decrease the DPWM frequency (see *Synchronizing the DPWM Frequency*).

DPWM or other "chopping" methods can cause audible noise from some transformers. The transformer should be carefully designed to avoid such behavior.

Dimming Range

The external components required to achieve a dimming range are highly dependent on the CCFL used. The standard application circuit uses a CCFL with stringent requirements. To achieve a 20:1 dimming range, the standard circuit drops slightly more voltage across C6 as it does across the CCFL at the full lamp current setting. This ensures good stability in that circuit with V_{MINDAC} as low as 1V. To further increase the dimming range when using this CCFL, C6 must be increased, which increases the maximum secondary transformer voltage and requires a transformer with a higher voltage rating. Other components (such as the primary transformer inductance and C_7) may also need to be adjusted to maintain good waveforms, Royer efficiency, and the desired Royer frequency.

Other Components

The high-side MOSFET driver is powered by the external boosting circuit formed by C5 and D2. Connect BST through a signal-level Schottky diode to VL, and bypass it to LX with a 0.1µF ceramic capacitor. This circuit delivers the necessary power to drive N1 as shown in Figure 8. If a higher gate capacitance MOSFET is used, the size of the bypass capacitor must be increased. The current need at BST is as follows:

$$I_{BST} = 1mA\ d + Q_T \times f$$

where d is the buck controller duty cycle (98% max), Q_T is the MOSFET total gate charge, and f is twice the Royer oscillator frequency.

The maximum current through D2 (I_D) is:

$$I_D = I_{BST} / (1 - d)$$

D5A and D5B are used to generate the current-sense voltage across R13. The current through these diodes is the lamp current; use a dual-series signal-level diode.

Bypassing and Board Layout

Connect C4 from VL to GND as close as possible with dedicated traces that are not shared with other signal paths. The ground lines should terminate at the GND end of C4: quiet ground, power ground, and lamp current-sense ground. Quiet ground is used for REF, CCV, R5, and MINDAC (if a resistor-divider is used). The power ground goes from the ground of C4 directly to the ground side of C9. Power ground should also supply the return path for D1, N2, and the buck current-sense resistor (from CS to GND, if used). The ground path for R13 should be separate to ensure that it does not corrupt quiet ground and it is not affected by DC drops in the power ground. Refer to the MAX1739 EV kit for an example of good layout.

Digital Interface (MAX1739)

With MODE connected to VL, the CRF/SDA and CTL/SCL pins no longer behave as analog inputs; instead, they function as SMBus-compatible 2-wire digital interfaces. CRF/SDA is the bidirectional data line, and CTL/SCL is the clock line of the 2-wire interfaces corresponding, respectively, to the SMBDATA and SMBCLK lines of the SMBus. The MAX1739 uses the write-byte, read-byte, and receive-byte protocols (Figure 11). The SMBus protocols are documented in System Management Bus Specification v1.08 and are available at www.sbs-forum.org.

The MAX1739 is a slave-only device and responds to the 7-bit address 0b0101101 (i.e., with the $\overline{RW}$ bit clear indicating a write, this corresponds to 0x5A). The MAX1739 has three functional registers: a 5-bit brightness register (BRIGHT4–BRIGHT0), a 3-bit shutdown mode register (SHMD2–SHMD0), and a 2-bit status register (STATUS1–STATUS0). In addition, the device

Write-Byte Format

S	ADDRESS	WR	ACK	COMMAND	ACK	DATA	ACK	P
	7 bits	1b	1b	8 bits	1b	8 bits	1b	

Slave Address

Command Byte: selects which register you are writing to

Data Byte: data goes into the register set by the command byte

Read-Byte Format

S	ADDRESS	WR	ACK	COMMAND	ACK	S	ADDRESS	RD	ACK	DATA	///	P
	7 bits	1b	1b	8 bits	1b		7 bits	1b	1b	8 bits	1b	

Slave Address

Command Byte: selects which register you are reading from

Slave Address: repeated due to change in data-flow direction

Data Byte: reads from the register set by the command byte

Send-Byte Format

S	ADDRESS	WR	ACK	COMMAND	ACK	P
	7 bits	1b	1b	8 bits	1b	

Command Byte: sends command with no data; usually used for one-shot command

Receive-Byte Format

S	ADDRESS	RD	ACK	DATA	///	P
	7 bits	1b	1b	8 bits	1b	

Slave Address

Data Byte: reads data from the register commanded by the last read-byte or write-byte transmission; also used for SMBus Alert Response return address

S = Start condition
P = Stop condition

Shaded = Slave transmission
Ack= Acknowledged = 0
/// = Not acknowledged = 1

WR = Write = 0
RD = Read =1

Figure 11. SMBus Protocols

has three identification (ID) registers: an 8-bit chip ID register, an 8-bit chip revision register, and an 8-bit manufacturer ID register.

The CRF/SDA and CTL/SCL pins have Schmidt-triggered inputs that can accommodate slow edges; however, the rising and falling edges should still be faster than 1µs and 300ns, respectively.

Communication starts with the master signaling the beginning of a transmission with a START condition, which is a high-to-low transition on CRF/SDA while CTL/SCL is high. When the master has finished communicating with the slave, the master issues a STOP condition (P), which is a low-to-high transition on CRF/SDA while CTL/SCL is high (Figures 10, 11). The bus is then free for another transmission. Figures 12 and 13 show the timing diagram for signals on the 2-wire interface. The address byte, command byte, and data byte are transmitted between the START and STOP conditions. The CRF/SDA state is allowed to change only while CTL/SCL is low, except for the START and STOP conditions. Data is transmitted in 8-bit words and is sampled on the rising edge of CTL/SCL. Nine clock cycles are required to transfer each byte in or out of the MAX1739 since either the master or the slave acknowledges the receipt of the correct byte during the ninth clock. If the MAX1739 receives its correct slave address followed by $R\overline{W}$ = 0, it expects to receive 1 or 2 bytes of information (depending on the protocol). If the device detects a start or stop condition prior to clocking in the bytes of data, it considers this an error condition and disregards all of the data. If the transmission is completed correctly, the registers are updated immediately after a STOP (or RESTART) condition. If the MAX1739 receives its correct slave address followed by $R\overline{W}$ = 1, it expects to clock out the register data selected by the previous command byte.

SMBus Commands

The MAX1739 registers are accessible through several different redundant commands (i.e., the command byte in the read-byte and write-byte protocols), which can

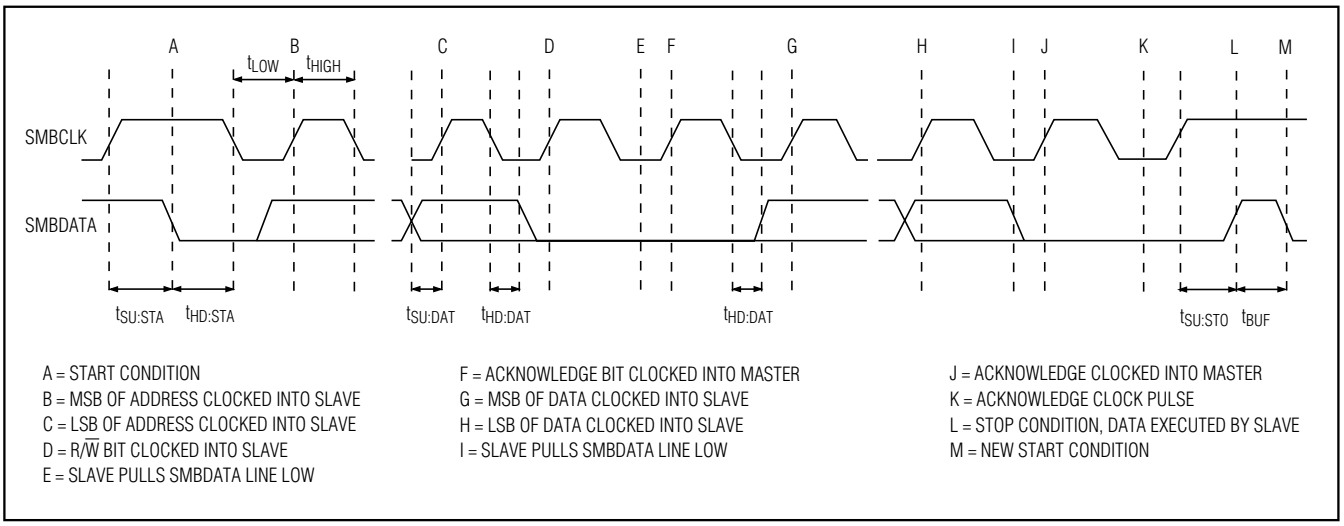

Figure 12. SMBus Write Timing

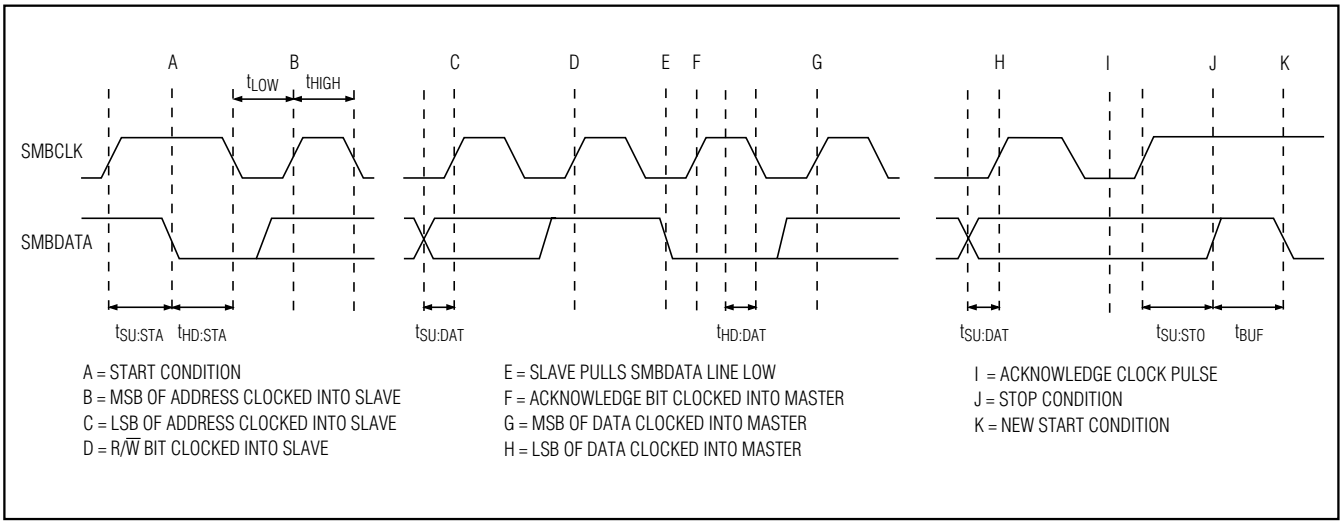

Figure 13. SMBus Read Timing

be used to read or write the brightness, SHMD, status, or ID registers.

Table 6 summarizes the command byte's register assignments, as well as each register's power-on state. The MAX1739 also supports the receive-byte protocol for quicker data transfers. This protocol accesses the register configuration pointed to by the last command byte. Immediately after power-up, the data byte returned by the receive-byte protocol is the contents of the brightness register, left justified (i.e., BRIGHT4 will be in the MSB position of the data byte) with the remaining bits containing a 1, STATUS1, and STATUS0. This gives the same result as using the read-byte protocol with a 0b10XXXXXX (0x80) command. Use caution with shorter protocols in multimaster systems since a second master could overwrite the command byte without informing the first master. During shutdown, the serial interface remains fully functional. The part also supports limited read/write-word protocol. Read-word works similar to read-byte except the second byte returned is 0xFF. Write-word also works similar to write-byte. The second data byte is acknowledged and updated after the first data byte is acknowledged and updated.

Table 6. Commands Description

R OR $\overline{W}$ PROTOCOL	COMMAND BYTE*	POR STATE	DATA REGISTER BIT ASSIGNMENT							
			BIT 7 (MSB)	BIT 6	BIT 5	BIT 4	BIT 3	BIT 2	BIT 1	BIT 0 (LSB)
Read and Write	0x01 0b0XXX XX01	0x17	0	0	0	BRIGHT4 (MSB)	BRIGHT3	BRIGHT2	BRIGHT1	BRIGHT0 (LSB)
Read and Write	0x02 0b0XXX XX10	0xF9	STATUS1	STATUS0	1	1	1	SHMD2	SHMD1	SHMD0
Read Only	0x03 0b0XXX XX11	0x96	ChipID7 1	ChipID6 0	ChipID5 0	ChipID4 1	ChipID3 0	ChipID2 1	ChipID1 1	ChipID0 0
Read Only	0x04 0b0XXX XX00	0x00	ChipRev7 0	ChipRev6 0	ChipRev5 0	ChipRev4 0	ChipRev3 0	ChipRev2 0	ChipRev1 0	ChipRev0 0
Read and Write	0x40 0b10XX XXXX	0xBF	BRIGHT4 (MSB)	BRIGHT3	BRIGHT2	BRIGHT1	BRIGHT0 (LSB)	1	STATUS1	STATUS0
Read Only	0xFE 0b11XX XXX0	0x4D	MfgID7 0	MfgID6 1	MfgID5 0	MfgID4 0	MfgID3 1	MfgID2 1	MfgID1 0	MfgID0 1
Read Only	0xFF 0b11XX XXX1	0x96	ChipID7 1	ChipID6 0	ChipID5 0	ChipID4 1	ChipID3 0	ChipID2 1	ChipID1 1	ChipID0 0

**The hexadecimal command byte shown is recommended for maximum forward compatibility with future MAXIM products.*

Brightness Register [BRIGHT4–BRIGHT0] (POR = 0b10111)

The 5-bit brightness register corresponds with the 5-bit brightness code used in the dimming control (see *Dimming Range*). BRIGHT4–BRIGHT0 = 0b00000 sets minimum brightness, and BRIGHT4–BRIGHT0 = 0b11111 sets maximum brightness. The SMBus interface does not control whether the device regulates the current by analog dimming, DPWM dimming, or both; this is done by MINDAC (Table 2).

Shutdown-Mode Register [SHMD2–SHMD0] (POR = 0b001)

The 3-bit shutdown-mode register configures the operation of the device when the $\overline{SH}$/SUS pin is toggled as described in Table 7. The shutdown-mode register can also be used to shut off directly the CCFL, regardless of the $\overline{SH}$/SUS state (Table 8).

Wide Brightness Range CCFL Backlight Controllers

Status Register [STATUS1–STATUS0] (POR = 0b11)

The status register returns information on fault conditions. If a lamp is not connected to the secondary of the transformer, the MAX1739 will detect that the lamp current has not exceeded the CSAV detection threshold and after 2 seconds will clear the STATUS1 bit (see *Lamp-Out Detection*). The STATUS1 bit is latched; i.e., it will remain 0 even if the lamp-out condition goes away. When STATUS1 = 0, the lamp is forced off. STATUS0 reports 1 as long as no overcurrent conditions are detected. If an overcurrent condition is detected in any given DPWM period, STATUS0 is cleared for the duration of the following DPWM period. If an overcurrent condition is not detected in any given DPWM period, STATUS0 is set for the duration of the following digital DPWM period. Forcing the CCFL lamp off by entering shutdown, writing to the mode register, or by toggling $\overline{SH}$/SUS sets STATUS1.

ID Registers

The ID registers return information on the manufacturer, the chip ID, and the chip revision number. The MAX1739 is the first-generation advanced CCFL controller, and its ChipRev is 0x00. Reading from the MfgID register returns 0x4D, which is the ASCII code for “M” (for Maxim); the ChipID register returns 0x96. Writing to these registers has no effect.

Table 7. SHMD Register Bit Descriptions

BIT	NAME	POR STATE	DESCRIPTION
2	SHMD2	0	SHMD2 = 1 forces the lamp off and sets STATUS1. SHMD2 = 0 allows the lamp to operate, though it may still be shut down by the $\overline{SH}$/SUS pin (depending on the state of SHMD1 and SHMD0).
1	SHMD1	0	When $\overline{SH}$ /SUS = 0, this bit has no effect. $\overline{SH}$/SUS = 1 and SHMD1 = 1 forces the lamp off and sets STATUS1. $\overline{SH}$ /SUS = 1 and SHMD1 = 0 allow the lamp to operate, though it may still be shut down by the SHMD2 bit.
0	SHMD0	1	When $\overline{SH}$ /SUS = 1, this bit has no effect. $\overline{SH}$ /SUS = 0 and SHMD0 = 1 forces the lamp off and sets STATUS1. $\overline{SH}$ /SUS = 0 and SHMD0 = 0 allows the lamp to operate, though it may still be shut down by the SHMD2 bit.

Table 8. $\overline{SH}$/SUS and SHMD Register Truth Table

$\overline{SH}$/SUS	SHMD2	SHMD1	SHMD0	OPERATING MODE
0	0	X	0	Operate
0	0	X	1	Shutdown, STATUS1 set
1	0	0	X	Operate
1	0	1	X	Shutdown, STATUS1 set
X	1	X	X	Shutdown, STATUS1 set

X = Don’t care

Table 9. Status Register Bit Descriptions (Read Only/Writes Have No Effect)

BIT	NAME	POR STATE	DESCRIPTION
1	STATUS1	1	STATUS1 = 0 means that a lamp-out condition has been detected. The STATUS1 bit stays clear even after the lamp-out condition has gone away. The only way to set STATUS1 is to shut off the lamp by programming the mode register or by toggling $\overline{SH}$/SUS.
0	STATUS0	1	STATUS0 = 0 means that an overcurrent condition was detected during the previous digital PWM period. STATUS0 = 1 means that no overcurrent condition was detected during the previous digital PWM period.

Pin Configurations (continued)

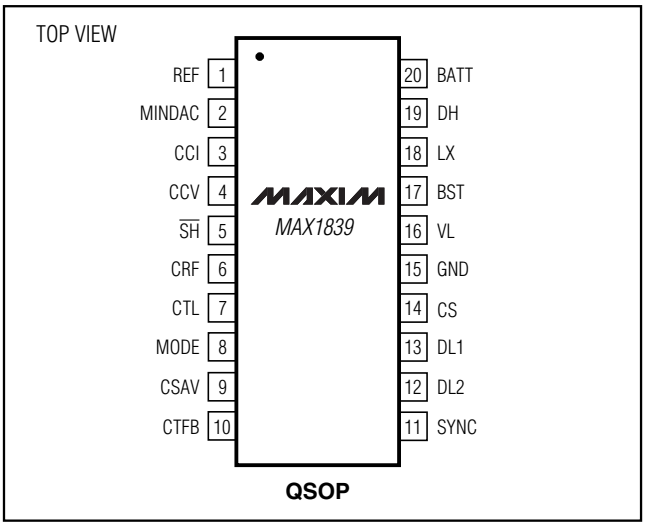

Chip Information

TRANSISTOR COUNT: 7194

Wide Brightness Range CCFL Backlight Controllers

Package Information

(The package drawing(s) in this data sheet may not reflect the most current specifications. For the latest package outline information, go to **www.maxim-ic.com/packages**.)

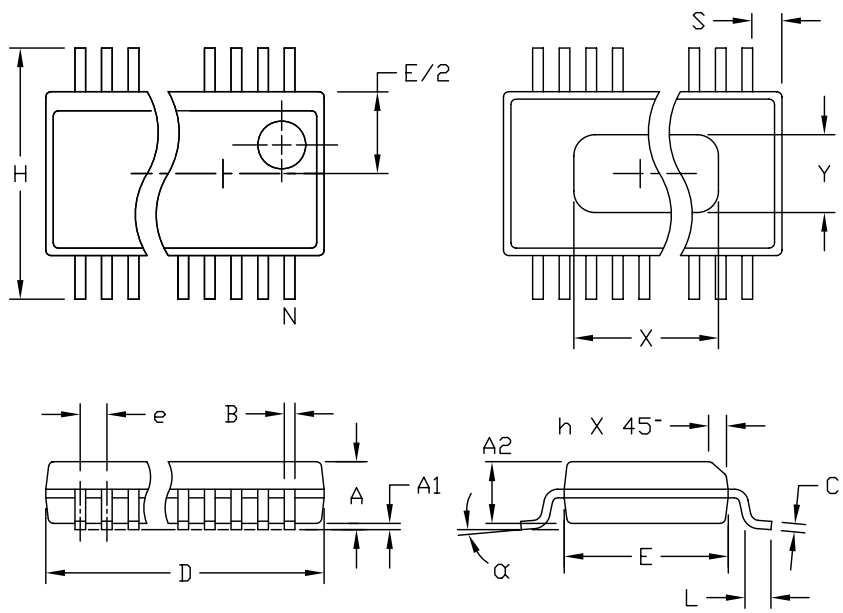

DIM	INCHES MIN	INCHES MAX	MILLIMETERS MIN	MILLIMETERS MAX
A	.061	.068	1.55	1.73
A1	.004	.0098	0.102	0.249
A2	.055	.061	1.40	1.55
B	.008	.012	0.20	0.31
C	.0075	.0098	0.191	0.249
D	SEE VARIATIONS			
E	.150	.157	3.81	3.99
e	.025 BSC		0.635 BSC	
H	.230	.244	5.84	6.20
h	.010	.016	0.25	0.41
L	.016	.035	0.41	0.89
N	SEE VARIATIONS			
X	SEE VARIATIONS			
Y	.071	.087	1.803	2.209
α	0°	8°	0°	8°

VARIATIONS:

	INCHES MIN.	INCHES MAX.	MILLIMETERS MIN.	MILLIMETERS MAX.	N	
D	.189	.196	4.80	4.98	16	AA
S	.0020	.0070	0.05	0.18		
X	.107	.123	2.72	3.12		
D	.337	.344	8.56	8.74	20	AB
S	.0500	.0550	1.270	1.397		
D	.337	.344	8.56	8.74	24	AC
S	.0250	.0300	0.635	0.762		
D	.386	.393	9.80	9.98	28	AD
S	.0250	.0300	0.635	0.762		
X	.271	.287	6.88	7.29		

NOTES:
1. D & E DO NOT INCLUDE MOLD FLASH OR PROTRUSIONS.
2. MOLD FLASH OR PROTRUSIONS NOT TO EXCEED .006" PER SIDE.
3. HEAT SLUG DIMENSIONS X AND Y APPLY ONLY TO 16 AND 28 LEAD POWER-QSOP PACKAGES.
4. CONTROLLING DIMENSIONS: INCHES.
5. MEETS JEDEC MO137.

QSOP.EPS

MAXIM
PROPRIETARY INFORMATION
TITLE:
PACKAGE OUTLINE, QSOP, .150", .025" LEAD PITCH

APPROVAL	DOCUMENT CONTROL NO.	REV	
	21-0055	C	1/1

Maxim cannot assume responsibility for use of any circuitry other than circuitry entirely embodied in a Maxim product. No circuit patent licenses are implied. Maxim reserves the right to change the circuitry and specifications without notice at any time.

© 2001 Maxim Integrated Products Printed USA MAXIM is a registered trademark of Maxim Integrated Products.

Mouser Electronics

Authorized Distributor

Click to View Pricing, Inventory, Delivery & Lifecycle Information:

Analog Devices Inc.:

MAX1739EEP+ MAX1739EEP+T