ILLUMINATED PANEL PLUG INDICATORS

SNAP-IN PANEL MOUNTING, ATTRACTIVE & RUGGED FOR WET & DUSTY ENVIRONMENTS

Sealed to IP68S, the K3P series of panel plugs with LED indicator lights provides reliable visual feedback to control operators. The K3P panel plugs and OTTO's K3 rocker switches share the same panel cutout size and snap-in front panel mounting method. This allows you to create a uniform panel appearance in your applications. Choose up to 70 different standard legends, 6 lens colors, 5 legend colors and 4 LED colors with 4 voltage options.

Standard Characteristics/Ratings:	
Seal:	IP68S
Operating Temp Range:	-40°C to +85°C
MATERIALS:	
Case and Base:	Black Thermoplastic
Button:	Black Thermoplastic
Terminals:	Brass Alloy

K3P PART NUMBER CODE

K3P – X X X X X

Light Source Position "A"
1. Red
2. Green
3. Amber
4. Blue
Z. No Illumination

Light Source Position "C"
1. Red
2. Green
3. Amber
4. Blue
Z. No Illumination

Lens Color Position "A"
1. Transparent Red
2. Transparent Green
3. Transparent Amber
4. Clear
5. Translucent White
6. Transparent Blue
Z. No Lens

Lens Color Position "C"
1. Transparent Red
2. Transparent Green
3. Transparent Amber
4. Clear
5. Translucent White
6. Transparent Blue
Z. No Lens

LED DC Voltage*
1. 2V
2. 6V
3. 12V
4. 24V

STOP HERE for lighted indicator without legends.

For legends, continue with part number code below.

***See appendix for complete voltage/current ratings table.**

K3P PART NUMBER CODE - CONTINUED FOR LIGHTED INDICATORS WITH LEGENDS

– XX XX X X X

Legend Style

Position "A"
ZZ. No Legend

Position "C"
ZZ. No Legend

NOTE: For all other legend options, refer to the legend table in the appendix, find the two digit code and enter the code in the appropriate position(s).

Legend Color

Position "A"
1. Red
2. Black
9. White
B. Backlight/ Daylight White ①
D. Backlight/ Deadfront ①
Z. No Legend

Position "C"
1. Red
2. Black
9. White
B. Backlight/ Daylight White ①
D. Backlight/ Deadfront ①
Z. No Legend

① Legend colors "B" and "D" use lens color "Z" for each position.

Legend Orientation

	Position "A"	Position "C"
1. Std.	A	C
2. 90°	A	C
3. 180°	A	C
4. 270°	A	C

PANEL PLUG WITH INDICATOR LIGHTS

SNAP-IN PANEL MOUNTING, ATTRACTIVE & RUGGED FOR WET & DUSTY ENVIRONMENTS

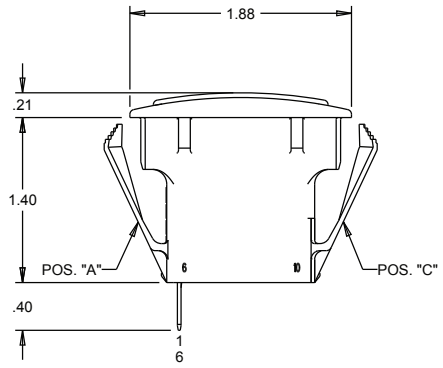

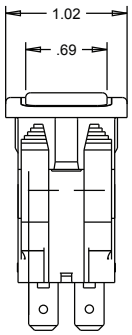

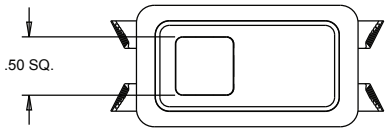

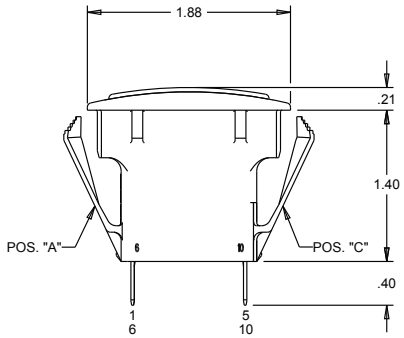

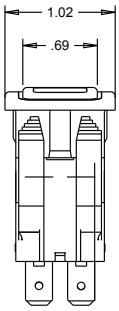

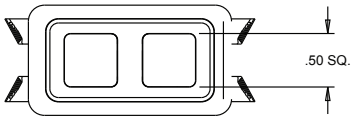

MOUNTING OPENING:
PANEL THICKNESS RANGE OF .025 - .105 PANEL SEAL GASKET P/N 807037 IS RECOMMENDED

PANEL THICKNESS RANGE OF .105 - .187 W/O GASKET

PANEL OPENING:	MIN.	TYP.	MAX.
WIDTH	.870	.937	.950
LENGTH	1.730	1.768	1.805

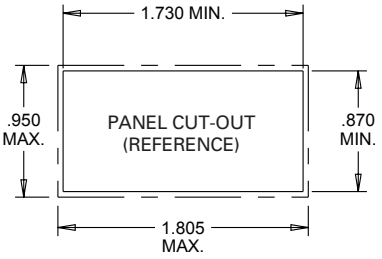

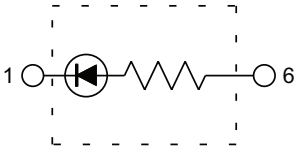

IND. LIGHT IN "A"
SCHEMATIC

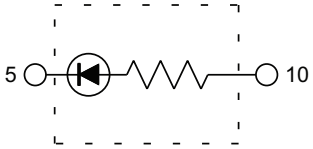

IND. LIGHT IN "C"
SCHEMATIC

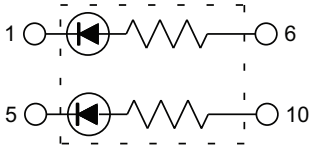

DUAL IND. LIGHT
SCHEMATIC

Specifications Subject To Change Without Notice

STANDARD LEGENDS PER SAE

STANDARD LEGENDS PER SAE SPECIFICATIONS

STANDARD LEGENDS PER SAE SPECIFICATIONS							
A1		ANCHOR	K2		UNLOCK	P5	BILGE BLOWER
B1		BATTERY	L1		LIGHT	R1	LIFT
B2		ELECTRIC POWER	L2		MASTER LIGHTING SWITCH	R2	LOWER
C1		AC/COOLING SYSTEMS	L3		HEADLIGHTS	R3	UP
C2		DEHUMIDIFIER	L4		HEADLIGHTS-LOW / DIPPED BEAM	R4	DOWN
C3		HEATER/INTERIOR HEATING	L5		HEADLIGHTS-HIGH / UPPER BEAM	R5	RIGHT
D1		WINDSHIELD DEFROSTER	L6		PARKING LIGHT	R6	LEFT
D2		REAR WINDOW DEFROSTER	L7		WORK LAMP	R7 FWD	FORWARD
D3		MIRROR DEFROSTER	L8		WORK LAMP	R8 REV	REVERSE
E1		ENGINE/START	L9		INTERIOR DOME LIGHT	S1	RADIO
E2		ENGINE/STOP	M1		BEACON	S2	MUTE
E3		ON/START	M2		HAZARD/POSITION LIGHTS	T1	FAST
E4		OFF/STOP	M3		CLEARANCE LIGHTS	T2	SLOW
E5	ON	ON	M4		SIDE MARKER LIGHT	T3	TRIM TAB / TRIMMING OPERATION
E6	OFF	OFF	M5		RUNNING LIGHTS (UNDER POWER)	T4	TRANSMISSION
E7		ENGINE ELECTRIC PREHEAT	M6		ANCHOR LIGHT	V1	VENTILATING / AC FAN
E8		ENGINE-GAS INJECTION	M7		RUNNING/ANCHOR LIGHTS	W1	WINDSHIELD WIPER
F1		FRONT FOG LIGHTS	M8		SEARCH LIGHT	W2	WINDSHIELD-WASHER
F2		REAR FOG LIGHTS	M9		LEFT TURN SIGNAL	W3	WINDSHIELD-WASHER/WIPER
G1		FUEL	MA		RIGHT TURN SIGNAL	W4	REAR WINDOW WIPER
H1		HORN	P1		BILGE PUMP #1	W5	REAR WINDOW-WASHER
H2		HORN REAR	P2		BILGE PUMP #2	W6	REAR WINDOW-WASHER/WIPER
K1		LOCK	P3		BILGE PUMP #3	ZZ	NO LEGEND
			P4		BILGE PUMP		

For legends not shown, please consult an OTTO representative.

Specifications Subject To Change Without Notice

LED VOLTAGE/CURRENT RATINGS TABLE

K1, K2, K3P and K4 LIGHTING VOLTAGE/CURRENT COMPONENTS RATINGS

LIGHT SOURCE VOLTAGE CATEGORY	LIGHT SOURCE COLOR	FORWARD CURRENT	TYPICAL FORWARD/ NOMINAL VOLTAGE	MAX. FORWARD VOLTAGE
6 VDC INCANDESCENT	WHITE	.2 AMPS	6 VDC	8 VDC
12 VDC INCANDESCENT	WHITE	.08 AMPS	12 VDC	14 VDC
24 VDC INCANDESCENT	WHITE	.04 AMPS	24 VDC	28 VDC
125 VAC NEON	AMBER	1.9 mA	125 VAC	125 VAC
250 VAC NEON	AMBER	1.9 mA	250 VAC	250 VAC
2 V LED PRODUCTS*	RED	20 mA	1.9 VDC	2.5 VDC
	GREEN	20 mA	2.15 VDC	2.5 VDC
	AMBER	20 mA	1.95 VDC	2.5 VDC
	BLUE	20 mA	3.5 VDC	4.0 VDC
6 V LED PRODUCTS	SEE CHART	20 mA	6 VDC	8 VDC
12 V LED PRODUCTS	SEE CHART	20 mA	12 VDC	14 VDC
24 V LED PRODUCTS	SEE CHART	20 mA	24 VDC	28 VDC

K3/K5 LIGHTING VOLTAGE/CURRENT COMPONENTS RATINGS

LIGHT SOURCE VOLTAGE CATEGORY	LIGHT SOURCE COLOR	FORWARD CURRENT	TYPICAL FORWARD/ NOMINAL VOLTAGE	MAX. FORWARD VOLTAGE
6 VDC INCANDESCENT	WHITE	.2 AMPS	6 VDC	8 VDC
12 VDC INCANDESCENT	WHITE	.08 AMPS	12 VDC	14 VDC
24 VDC INCANDESCENT	WHITE	.04 AMPS	24 VDC	28 VDC
125 VAC NEON	AMBER	1.9 mA	125 VAC	125 VAC
250 VAC NEON	AMBER	1.9 mA	250 VAC	250 VAC
2 V LED PRODUCTS*	RED	20 mA	2.0 VDC	2.5 VDC
	GREEN	20 mA	2.2 VDC	2.6 VDC
	AMBER	20 mA	2.1 VDC	2.5 VDC
6 V LED PRODUCTS	SEE CHART	20 mA	6 VDC	8 VDC
12 V LED PRODUCTS	SEE CHART	20 mA	12 VDC	14 VDC
24 V LED PRODUCTS	SEE CHART	20 mA	24 VDC	28 VDC

R2 LIGHTING VOLTAGE/CURRENT COMPONENTS RATINGS

LIGHT SOURCE VOLTAGE CATEGORY	LIGHT SOURCE COLOR	FORWARD CURRENT	TYPICAL FORWARD/ NOMINAL VOLTAGE	MAX. FORWARD VOLTAGE
2 V LED PRODUCTS*	RED	20 mA	2.0 VDC	2.5 VDC
	GREEN	20 mA	2.2 VDC	2.6 VDC
	AMBER	20 mA	2.1 VDC	2.5 VDC
6 V LED PRODUCTS	SEE CHART	20 mA	6 VDC	8 VDC
12 V LED PRODUCTS	SEE CHART	20 mA	12 VDC	14 VDC
24 V LED PRODUCTS	SEE CHART	20 mA	24 VDC	28 VDC

*Intended for use with external resistor. The "2 volt" switches are intended to have a resistor added in series into the lighting circuit by the customer. To determine the approximate value of the resistor, use the equation below:

$$\textbf{RESISTOR SIZE} = \frac{\textbf{POWER SUPPLY VOLTAGE - LED FORWARD VOLTAGE}}{\textbf{LED FORWARD CURRENT}}$$

Specifications Subject To Change Without Notice

LED VOLTAGE/CURRENT RATINGS TABLE

ILLUMINATED PUSHBUTTON SWITCH & INDICATOR LIGHTS VOLTAGE/CURRENT RATINGS TABLES

LP3, LP5 AND LPL SERIES
LIGHTING VOLTAGE/CURRENT COMPONENTS RATINGS

LIGHT SOURCE VOLTAGE CATEGORY	LED COLOR	FORWARD CURRENT	TYP. FORWARD VOLTAGE (DC)	MAX. FORWARD VOLTAGE DC
2V* PRODUCTS	RED	20 mA	1.9V	2.5V
	GREEN	20 mA	2.2V	2.6V
	AMBER			
	BLUE	20 mA	3.3V	4V
	DEEP GREEN			
6V PRODUCTS	ALL COLORS	20 mA	6V	8V
12V PRODUCTS	ALL COLORS	20 mA	12V	14.5V
24V PRODUCTS	ALL COLORS	20 mA	24 V	28.6 V

LP3S
LIGHTING VOLTAGE/CURRENT COMPONENTS RATINGS

LIGHT SOURCE VOLTAGE CATEGORY	LED COLOR	FORWARD CURRENT	TYP. FORWARD VOLTAGE	MAX. FORWARD VOLTAGE
2V* PRODUCTS	RED	20 mA	2 V	2.5 V
	GREEN			
	AMBER			
	BLUE	20 mA	3.2 V	4 V
	DEEP GREEN			
	WHITE			
12V PRODUCTS	ALL COLORS	20 mA	12V	14V
24V PRODUCTS	ALL COLORS	20 mA	24 V	28.6 V

LP7-D and LP9 SERIES
LIGHTING VOLTAGE/CURRENT COMPONENTS RATINGS

LIGHT SOURCE VOLTAGE CATEGORY	LED COLOR, WAVELENGTH (nm)	FORWARD CURRENT	TYP. FORWARD VOLTAGE	MAX. FORWARD VOLTAGE
2V LIGHTPIPE STYLE	RED (631)	20 mA	2V	2.4V
	GREEN (525)	20 mA	3.2V	3.6V
	AMBER (591)	20 mA	2.1V	2.4V
	BLUE (470)	20 mA	3.3V	3.8V
	WHITE	5 mA	2.9V	3.15V
2V, TRANSLUCENT FULLY ILLUMINATED STYLE	RED (630)	20 mA	1.95V	2.5V
	GREEN (525)	20 mA	3.3V	4.1V
	AMBER (601)	20 mA	2.1V	2.5V
	BLUE (465)	20 mA	3.3V	4V
	WHITE	5 mA	2.85V	3.1V
12V ALL PRODUCTS	ALL COLORS, SAME AS 2V	(20 mA)	12.0V	14.0V

LP9L SERIES
LIGHTING VOLTAGE/CURRENT COMPONENTS RATINGS

LIGHT SOURCE VOLTAGE CATEGORY	LED COLOR, WAVELENGTH (nm)	FORWARD CURRENT	TYP. FORWARD VOLTAGE	MAX. FORWARD VOLTAGE
2V PRODUCTS	RED (631)	20 mA	2V	2.4V
	GREEN (525)	20 mA	3.2V	3.6V
	AMBER (591)	20 mA	2.1V	2.4V
	BLUE (470)	20 mA	3.3V	3.8V
	WHITE	5 mA	2.9V	3.15V
12V PRODUCTS	ALL COLORS, SAME AS 2V	(20 mA)	12.0V	14.0V

*Intended for use with external resistor. The "2 volt" switches are intended to have a resistor added in series into the lighting circuit by the customer. To determine the approximate value of the resistor, use the equation below:

RESISTOR SIZE = <u>POWER SUPPLY VOLTAGE - LED FORWARD VOLTAGE</u>
LED FORWARD CURRENT

Mouser Electronics

Authorized Distributor

Click to View Pricing, Inventory, Delivery & Lifecycle Information:

OTTO:

K3P-11112 K3P-1Z1Z4 K3P-23234 K3P-2Z2Z4 K3P-3Z3Z4 K3P-4Z6Z4