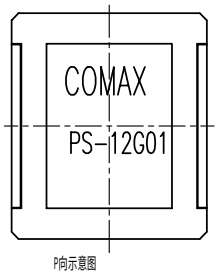

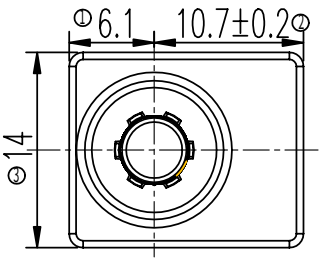

注意（Remark）：

1：本产品主要安装在面板上使用，不能直接安装端子部位；
This product is designed to be installed on the panel, and cannot install directly into the terminal.

2：8#尺寸显示为推荐位置。
Point 8# is the recommended position.

3：9#尺寸显示为推荐插入深度。
Point 9# is the recommended depth of insertion.

4：开关操作,为了确保接点部以适当的接触压力以及接点确切的转换机能，请一定操作点击17.3±0.2以上操作部，使其回复到16.3的位置。
When operating the switch, make sure the operating position has released to 16.3mm, so that the contact point 17.3±0.2 has enough pressure to trigger on and off function.

5:10#尺寸对应板厚0.55～0.65mm，推荐端子厚度尺寸：0.64mm，推荐端子宽度尺寸1.5～2.0mm
The thickness of terminal in point #10 is recommended to be 0.64mm, and the corresponding insert slot should be 0.55 - 0.65mm. The width of terminal is recommended to be 1.5 - 2mm.

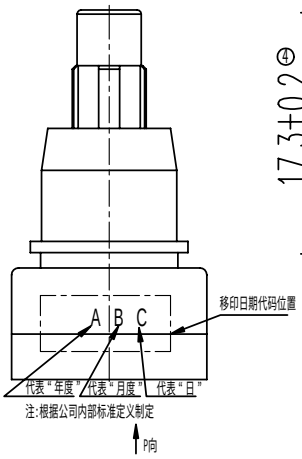

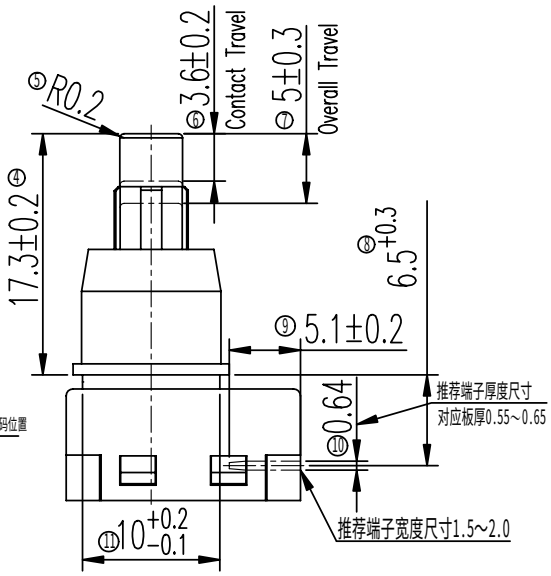

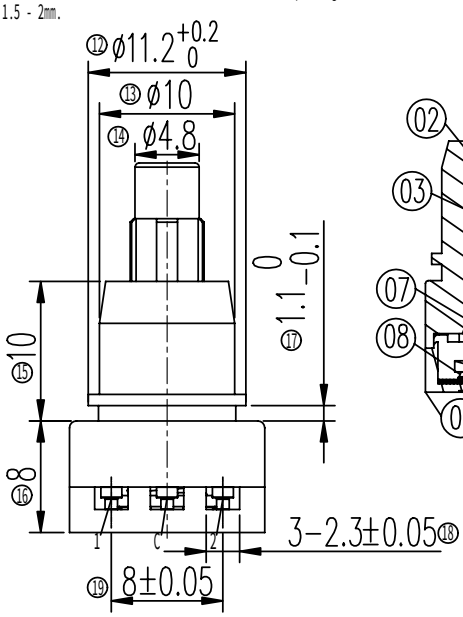

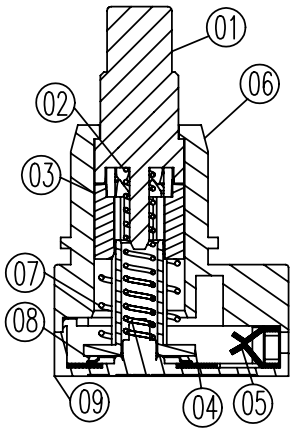

胶柄变化位置图

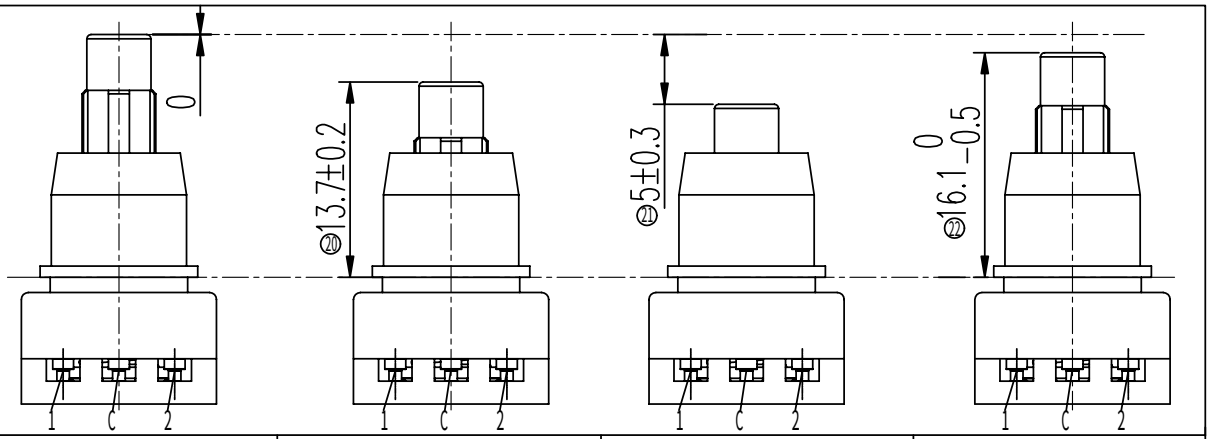

	起始位置	导通位置	总行程	回复位置
回路状态图 C—1	ON	ON → OFF	OFF	OFF
回路状态图 C—2	OFF	OFF → ON	ON	ON
回路图	C 1 2	C 1 2	C 1 2	C 1 2

序NO.	零件 PART	材料 MATERIAL	数量QTY	备注REMARKS
09	胶盖 COVER	PBT	1	NATURAL
08	接触片CONTACT	C5210R	1	Ag CLAD
07	弹簧 SPRING 2	SUS	1	NATURAL
06	胶壳 HOUSING	PBT	1	NATURAL
05	端子 TERMINAL	C5210R	3	Ag PLATED
04	转子 ROTOR	PBT	1	NATURAL
03	滑块 SLIDE	POM	1	NATURAL
02	弹簧 SPRING 1	SUS	1	NATURAL
01	胶柄 KNOB	POM	1	NATURAL

Patented Product 专利产品

规格 Specifications

额定负荷 Ratings	DC 14V 1A
初期接触电阻Initial Contact Resistance	100mΩ Max.
绝缘电阻 Insulation Resistance	DC 500V 60±5Sec. 100MΩ Min.
抗电强度 Dielectric Voltage	AC 500V(50~60Hz) 60±5Sec.
操作力度 Operating Force	400±100gf
接触行程 Contact Travel	3.6±0.2mm
总行程 Overall Travel	5.0±0.3mm
回路 Poles-Throws	1P2T

标号 REV	内容 DESCRIPTION	签名 SIGN.	日期 DATE

DWG NO. ITEM2846

TOLERANCES UNLESS OTHERWISE SPEC.		TITLE	PUSH SWITCH		ITEM NO	PS-12G01	
UNDER 1	± 0.10	DRAWN	胡俊廷	09-10-19	VERSION	A01	PAGE 1 OF 1
1 - 10	± 0.30	REVIEWED	方 勇	09-10-19	SCALE		UNIT mm
OVER 10	± 0.50	APPROVED	马建和	09-10-19	PROJECTION		

COMAX 高铭电子（惠州）有限公司
Comax Electronics(Huizhou)Co.,Ltd.

Mouser Electronics

Authorized Distributor

Click to View Pricing, Inventory, Delivery & Lifecycle Information:

C&K Switches:

PS12G01