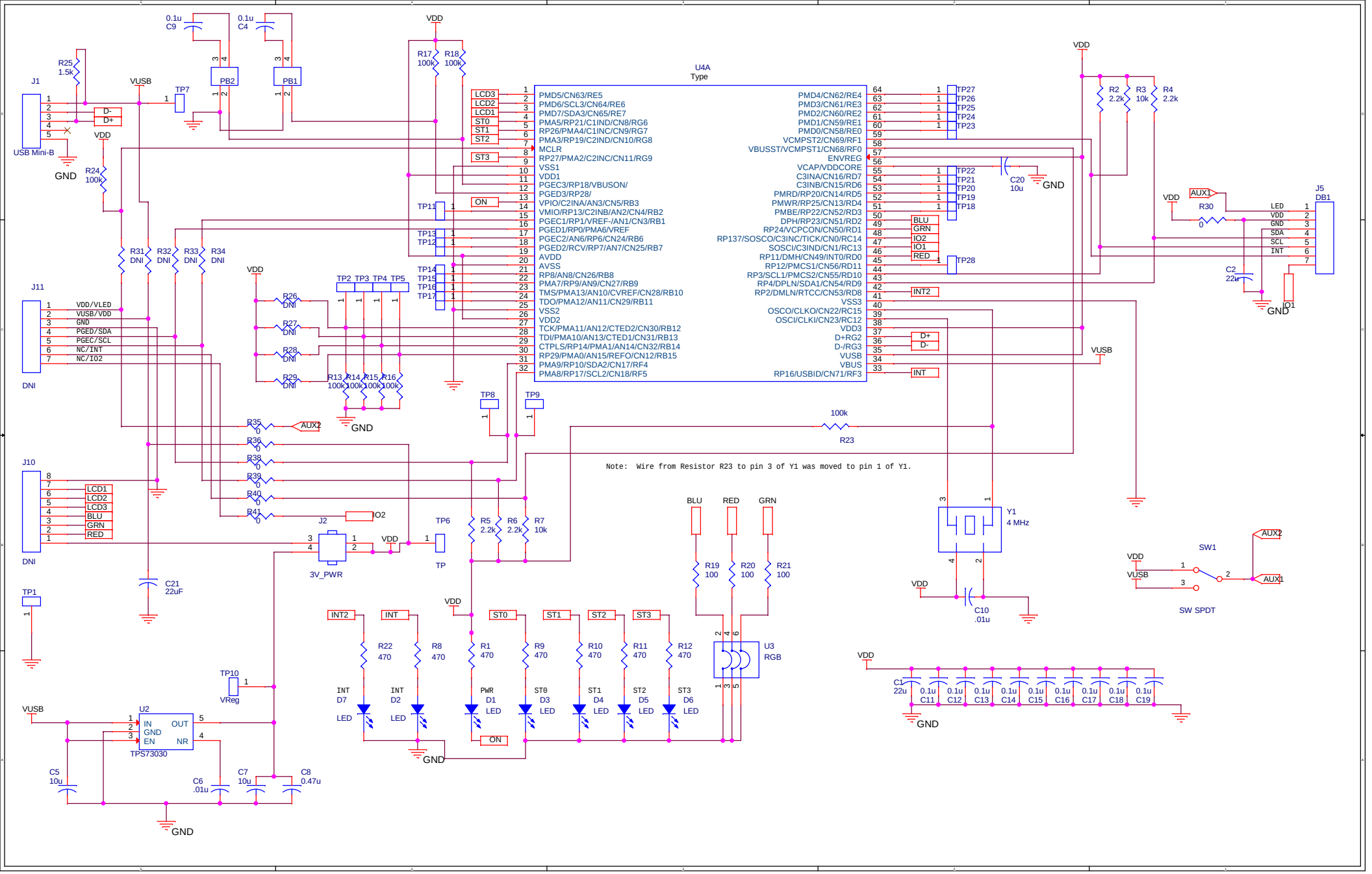
U4A
Type
PMD5/CN63/RE5
PMD6/SCL3/CN64/RE6
PMD7/SDA3/CN65/RE7
PMA5/RP21/C1IND/CN8/RG6
RP26/PMA4/C1INC/CN9/RG7
PMA3/RP19/C2IND/CN10/RG8
MCLR
RP27/PMA2/C2INC/CN11/RG9
VSS1
VDD1
PGEC3/RP18/VBUSON/
PGED3/RP28/
VPIO/C2INA/AN3/CN5/RB3
VMIO/RP13/C2INB/AN2/CN4/RB2
PGEC1/RP1/VREF-/AN1/CN3/RB1
PGED1/RP0/PMA6/VREF
PGEC2/AN6/RP6/CN24/RB6
PGED2/RCV/RP7/AN7/CN25/RB7
AVDD
AVSS
RP8/AN8/CN26/RB8
PMA7/RP9/AN9/CN27/RB9
TMS/PMA13/AN10/CVREF/CN28/RB10
TDO/PMA12/AN11/CN29/RB11
VSS2
VDD2
TCK/PMA11/AN12/CTED2/CN30/RB12
TDI/PMA10/AN13/CTED1/CN31/RB13
CTPLS/RP14/PMA1/AN14/CN32/RB14
RP29/PMA0/AN15/REFO/CN12/RB15
PMA9/RP10/SDA2/CN17/RF4
PMA8/RP17/SCL2/CN18/RF5
PMD4/CN62/RE4
PMD3/CN61/RE3
PMD2/CN60/RE2
PMD1/CN59/RE1
PMD0/CN58/RE0
VCMPST2/CN69/RF1
VBUSST/VCMPST1/CN68/RF0
ENVREG
VCAP/VDDCORE
C3INA/CN16/RD7
C3INB/CN15/RD6
PMRD/RP20/CN14/RD5
PMWR/RP25/CN13/RD4
PMBE/RP22/CN52/RD3
DPH/RP23/CN51/RD2
RP24/VCPCON/CN50/RD1
RP137/SOSCO/C3INC/TICK/CN0/RC14
SOSCI/C3IND/CN1/RC13
RP11/DMH/CN49/INT0/RD0
RP12/PMCS1/CN56/RD11
RP3/SCL1/PMCS2/CN55/RD10
RP4/DPLN/SDA1/CN54/RD9
RP2/DMLN/RTCC/CN53/RD8
VSS3
OSCO/CLKO/CN22/RC15
OSCI/CLKI/CN23/RC12
VDD3
D+/RG2
D-/RG3
VUSB
VBUS
RP16/USBID/CN71/RF3
J1
USB Mini-B
J11
DNI
J10
DNI
J5
DB1
J2
3V_PWR
U2
TPS73030
U3
RGB
Y1
4 MHz
SW1
SW SPDT
Note: Wire from Resistor R23 to pin 3 of Y1 was moved to pin 1 of Y1.
GND
VDD
VUSB

Mouser Electronics

Authorized Distributor

Click to View Pricing, Inventory, Delivery & Lifecycle Information:

ams:
TMD3700-DB