ITT

Interconnect Solutions
Cannon, VEAM, BIW

Providing 100% reliable
electrical connections for over 65 years
on commercial and military aircrafts
and over a 150 billion miles flown

Engineered for life

DPXA - Single Shell DPX
DPXA connectors are one-piece shell miniature rack/panel connectors. The construction offers high strength and maximum utilization of insert area for contact arrangements accommodating up to 106 contacts. Shells are keystone-shaped for polarization. Operating temperature for the DPXA is -54.2˚C to +125˚C (-67˚F to +257˚F).

DPXB - Polarized ARINC Shell
DPXB connectors are DPXA connectors with an ARINC B shelf. Additional polarization is provided by three hexagonal polarizing posts.

DPXA-34

DPXB-33

DPX2 - Two Gang DPX Series
DPX2 connectors are the original two-gang versions of the DPX, and are made of the same materials and accommodate the same contact arrangements. Keystone shaped shells accommodate two DPX inserts with up to 212 contacts. The DPX2 has three polarizing posts with 99 polarizing positions.

DPX2 - A - ARINC A Shell
DPX2-A connectors are DPX2 connectors with an ARINC A shell. This shell type has the receptacle flange placed .344 (8.74) from the front of the engaging portion of the shell, and short aluminum alloy polarizing posts permit polarization before contacts engage.

DPX2-34B

DPX2-33B

DPX2-B - ARINC B Shell
DPX2-B connectors supersede the DPX2-A and have an ARINC B Shell. This Shell type has the receptacle flange placed .060 (1.52) from the front of the engaging portion of the shell, and polarizing posts permit polarization before the shells engage.

DPX3 - Three Gang DPX Series
DPX3 connectors are three-gang versions of the DPX, made of the same materials, and accommodate the same contact arrangements. The three-gang version can therefore accommodate up to a total of 318 in the keystone shaped shells, with three polarizing posts that are capable of providing up to 99 polarizing positions.

DPX4 - Four Gang DPX Series
DPX4 connectors are four gang versions of the DPX, made of the same materials, and can accommodate four separate arrangements that can total up to 424 contacts. The DPX4 has three polarizing posts with 99 polarizing positions.

DPX3-34

DPX4-33

DPX*MA - LITTLE CAESAR' Contact Assembly
DPX*MA connectors are DPX connectors with the LITTLE CAESAR contact assembly for rear insertion, release, and extraction of crimp type contacts. Insertion requires no tool; extraction requires an expendable plastic tool. A hard dielectric, closed-entry socket insert has lead-in chamfers for positive mating of contacts. Contacts are crimpable with the M22501 tool.

DPX*ME - Environmental with LITTLE CAESAR Contact Assembly
DPX*ME connectors are DPXMA connectors with environmental interfacial and grommet seals, and olive drab shell finish.

Performance and Material Specifications (DPXA/DPXB/DPX*MA/DPX*ME)

		DPXA/DPXB/DPX2	DPX*MA/DPX2*MA/ME	Specifications
Shell	Material	Aluminum alloy	Aluminum alloy	QQ- A-591/A380
	Finish	Cadmium plate with yellow chromate	Cadmium plate with yellow chromate for MA: olive drab for ME	QQ-P-416
Insulator	Material	Melamine or Phenolic	Diallyl phthalate or epoxy	MIL-M-14
Contacts	Material	Copper alloy	Copper alloy	QQ-C-533
	Finish	Gold	Gold	MIL-G-45204
	Termination	Solder Pot	Crimp	N/A
Polarizing Posts	Material	Die Cast	Die cast	
	Finish	Cadmium	Cadmium	QQ-P-416
Screws & Lockwashers	Material	Steel	Steel	QQS-630-637
	Finish	Cadmium Plate	Cadmium plate	QQ-P-416
Seals	Material	N/A	Silicone	N/A

How to Order

DPXA/DPXB

DPX	A			32C2	- 34	P	- 1			
DPX	B	R	MA -	67	- 33	S	- 00	01	- F0	

SERIES PREFIX
SHELL STYLE
RoHS
CLASS
CONTACT ARRANGEMENT
SHELL TYPE
CONTACT TYPE
MODIFICATION
POLARIZING POSITION
LESS CONTACTS*

SERIES PREFIX
DPX - ITT designation

SHELL STYLE
A - Single shell
B - Polarized ARINC shell

RoHS version
R - RoHS compatible

CLASS
No designator - Solder type
MA - Crimp type with LITTLE CAESAR contact assembly
ME - Environmental crimp type
MB - Wire seperator
MK - Mounting springs

CONTACT ARRANGEMENT
2 thru 106 (see pages H-50 to H-54)

SHELL TYPE
33 for plug; 34 for receptacle

CONTACT TYPE
P for pin: S for socket

MODIFICATION
DPXA - See page H-66 to H-69
DPXB - See pages H-66 to H-69.

POLARIZING POSTION
For DPXB shell style only

DPX2

DPX	2			57	P	- 57	P	- 33	B	- 00 01			
DPX	2		MA	57	P	- 57	P	- 33	A	- 03 01			
DPX	2	R	MA	57	P	- 57	P	- 34	B	- 02 01			- F0

SERIES PREFIX
TWO GANG SHELL
RoHS
CLASS
CONTACT ARRANGEMENT
(Side A)
CONTACT TYPE
CONTACT ARRANGEMENT
(Side B)
CONTACT TYPE
SHELL TYPE
SHELL STYLE
MODIFICATION NUMBER
POLARZING POSITION
LESS CONTACTS*

SERIES PREFIX
DPX - ITT Cannon designation

SHELL
2 - Two gang

RoHS
R - RoHS compatible

CLASS
No designator - Solder type
MA - Crimp type with LITTLE CAESAR contact assembly
ME - Environmental crimp type

CONTACT ARRANGEMENT
2 thru 106 (see pages H-50 to H-54

CONTACT TYPE
P for pin; S for socket

SHELL TYPE
33 for plug; 34 for receptacle

SHELL STYLE
No designator - original two-gang DPX
A - ARINC A shell
B - ARINC B shell

MODIFICATION
See pages H-66 to H-69.

POLARIZING POSITION
See pages H-70

How to Order

DPX3/DPX4

DPX	3	ME	- 57	P	- 57	P	- 57	P			- 34	- 00	01
DPX	4	ME	- 57	P	- 57	P	- 57	P	- 57	P	- 34	- 00	01

SERIES PREFIX
SHELL
CLASS
CONTACT ARRANGEMENT (Side A)
CONTACT TYPE
CONTACT ARRANGEMENT (Side B)
CONTACT TYPE
CONTACT ARRANGEMENT (Side C)
CONTACT TYPE
CONTACT ARRANGEMENT (Side 0)
CONTACT TYPE
SHELL TYPE
MODIFICATION NUMBER
POLARIZING POSITION

SERIES PREFIX

DPX - ITT designation

SHELL

3 - Three gang 4 - Four gang

CLASS

MA - Crimp type contacts in LITTLE CAESAR contact assembly
ME - Environment- resistant, crimp type contacts

***CONTACT ARRANGEMENT**

See pages H-50 to H-54 for applicable arrangements. Please specify each arrangement number as indicated in ordering nomenclature for 3 or 4 gang if not listed below.

****CONTACT TYPE**

P for pin; S for socket. Designation follows each arrangement as ordered for 3 or 4 gang versions.

SHELL TYPE

33 for plug; 34 for receptacle

MODIFICATION See pages H-66 to H-69.

POLARIZING POSITION See pages H-70

ROHS Finish Zinc Plate per ASTM-B-633 with Trivalent Chromate Coating

DPXMA/ME

DPXMA/DPXME - 0PX - 3 Shell Layouts

	Insert - Used in shell position as noted					
	MA:	W8	32W4	57	67	A106
Layout	ME:	AW8	A32W4	57	67	A106
*E24		A,B,C				
*F122		A,B				C
G122		B		A,C		
*E142		C			A,B	
*A166			C		A,B	
171				A,B,C		
201					A,B,C	
*C205			C		A	B
B240					A,C	B
C240					A,B	C
*D244			C			A,B
A279					C	A,B
A318						A,B,C

*Applicable to "ME" only. Consult factory for similar layouts application to "MA."

NOTE: For pictorial views of above layouts see pages 52-56.

DPXMA/DPXME - 0PX - 4 Shell Layouts

	Insert - Used in shell position as noted							
	MA:	W8	26	32W4	57	67	A106	None
Layout	ME:	AW8	26	A32W4	57	67	A106	None
145			A,B,C			D		
*B148		C,D	B				A	
B150		A,B			A,C	C,D		
*181		B				A	C	D
*B189		C,D				B	A	
*A198				C,D	A,B,C	A,B		
268						A,B,C,D		
*E287		D				B	A,C	
*220		B					C,D	A
*A233				A		B,C,D		
279						A	C,D	B
*F287		B				A	C,D	
*E326		B					A,C,D	
A346						C,D	A,B	
B346						A,B	C,D	
385						A	B,C,D	
A424							A,B,C,D	

Dimensions shown in inches (mm)
Specifications and dimensions subject to change

Single Gang

DPXA-33

All tolerances ± .015(0.38) unless otherwise noted.

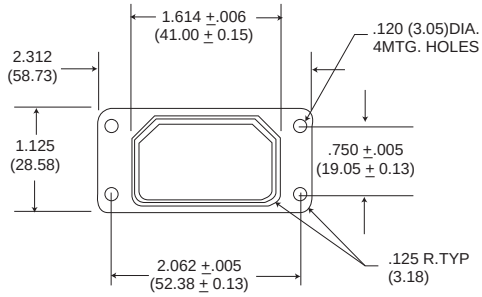

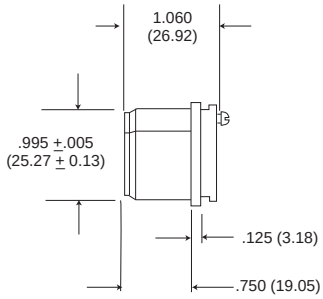

DPXA-34

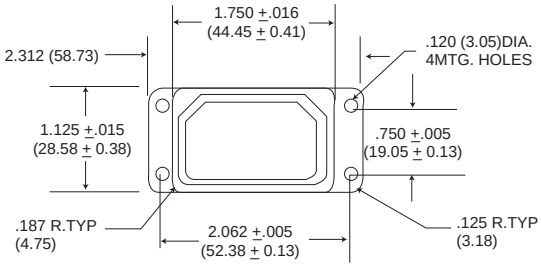

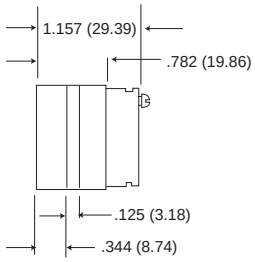

DPXA-33 ARINC Shell

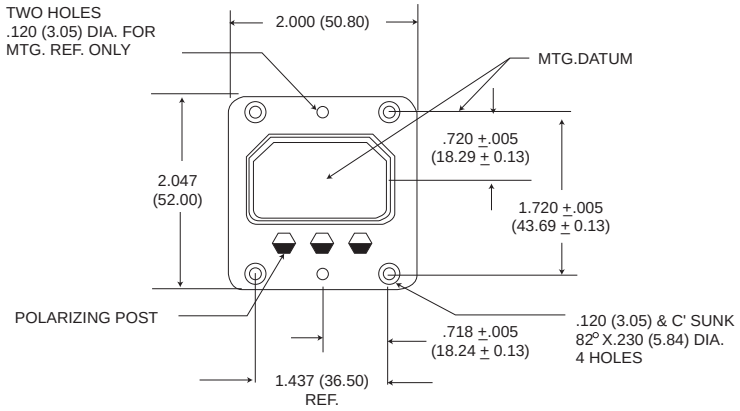

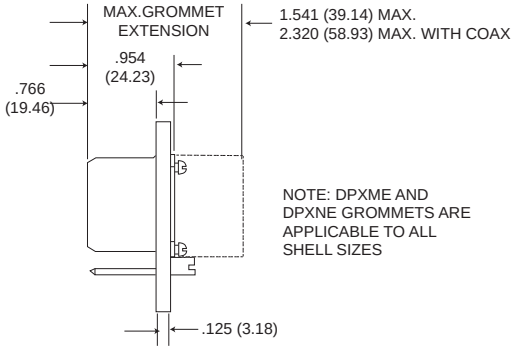

DPXA-34 ARINC Shell

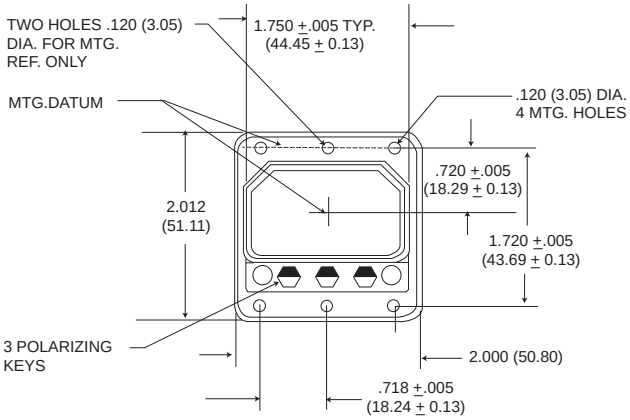

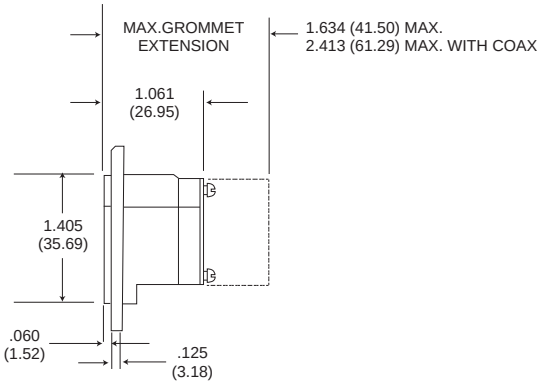

NOTE - ARINC requires that DPXB shells are mounted with the polarizing posts at the top. See pages 71-72

Dimensions shown in inches (mm)
Specifications and dimensions subject to change

Two Gang

DPX2-33 Shell

All tolerance are ± .015 (0.38) unless otherwise noted.

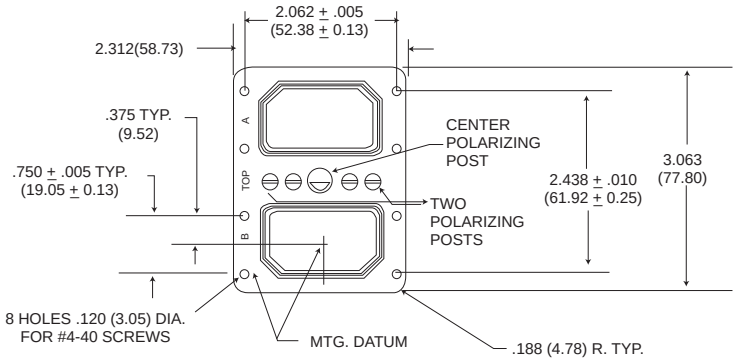

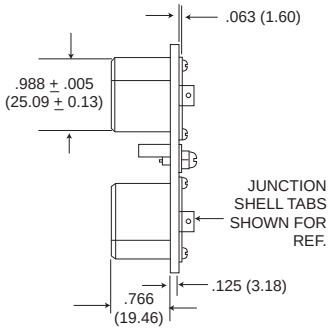

DPX2-34 Shell

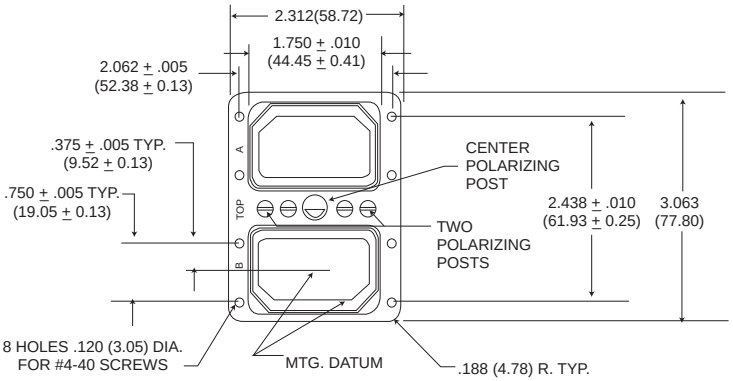

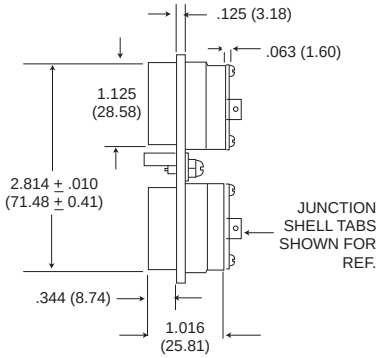

DPX2-33A ARINC A Shell

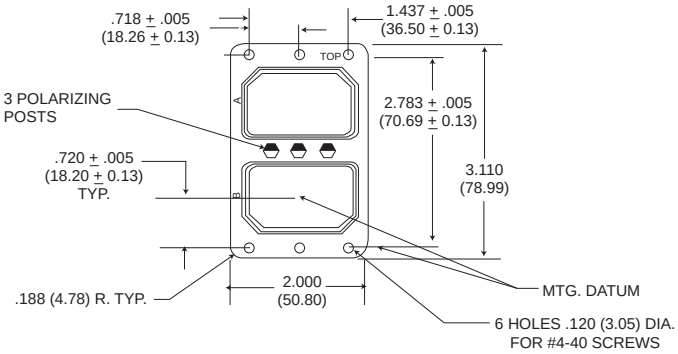

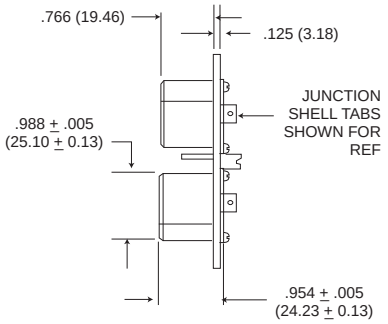

DPX2-34A ARINC A Shell

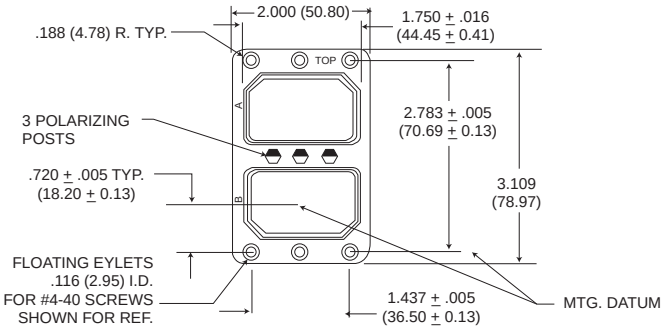

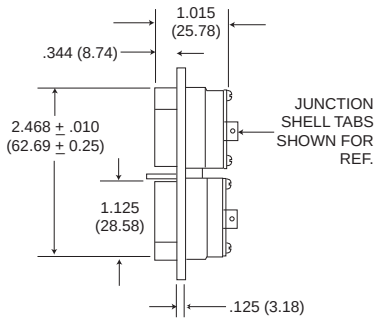

Dimensions shown in inches (mm)
Specifications and dimensions subject to change

Two Gang - ARINC B Shell

DPX2-33B

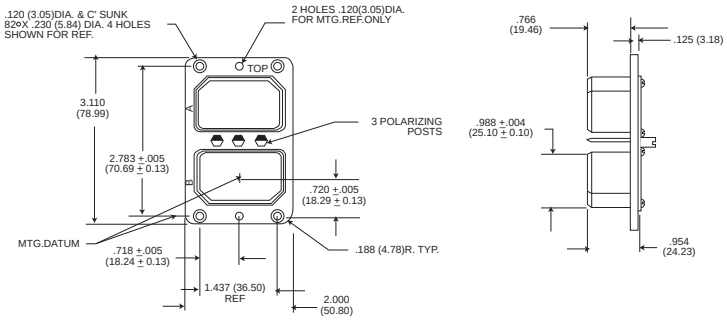

DPX2-34B

All tolerances are ± .015(0.38) unless other wise noted.

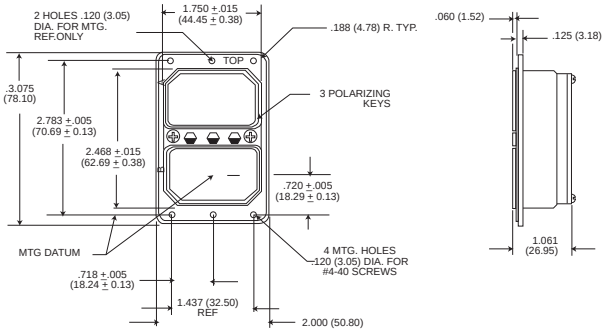

Two Gang - Screw Coupling

DPX2-33F (Female)

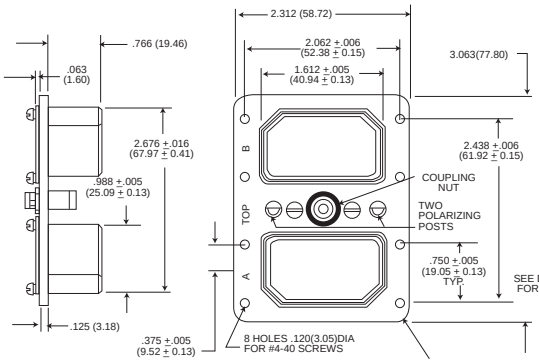

DPX2-34M (Male)

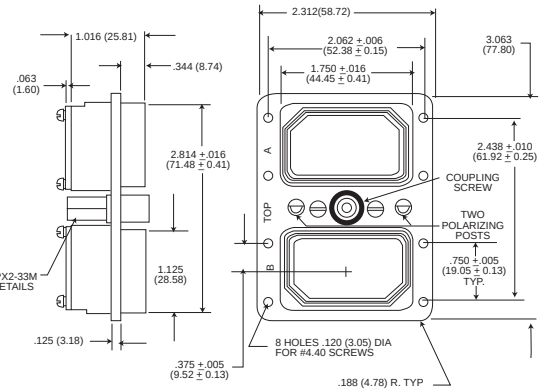

DPX2-34F (Female)

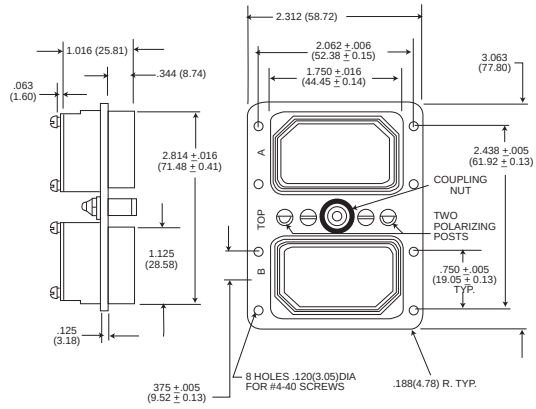

DPX2-33M (Male)

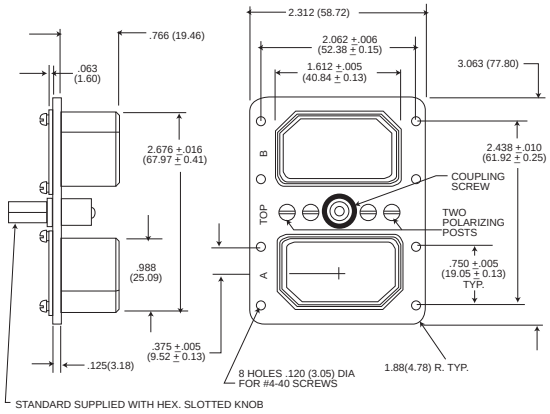

Engaging Devices

DPX2-34M with wing handle type
-0901; example, DPX2-34M-0901

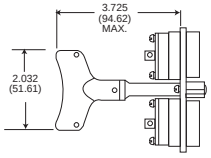

Not availble on DPX2-34B Shells

DPX2-34M with extended hex,
knob type -0501; example, DPX2-34M-0501

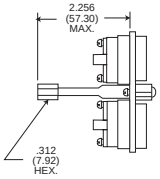

Two Gang - ARINC B Shell

DPX3-33

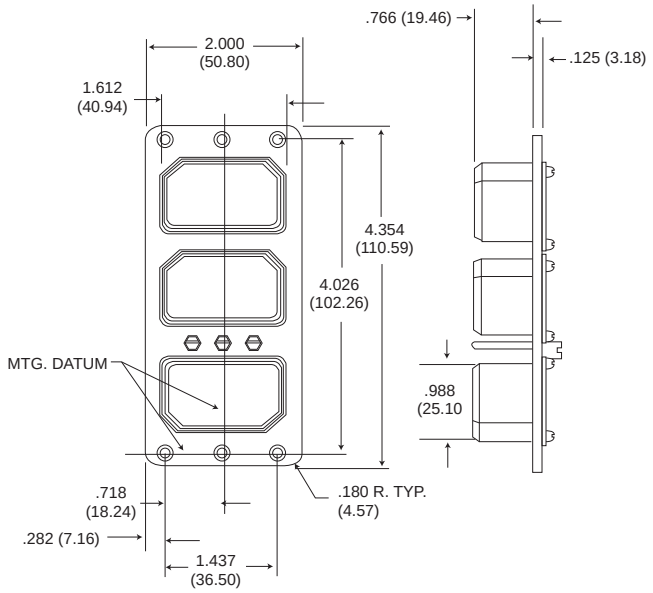

DPX3-34

All tolerances are ± .015(0.38) unless other wise noted.

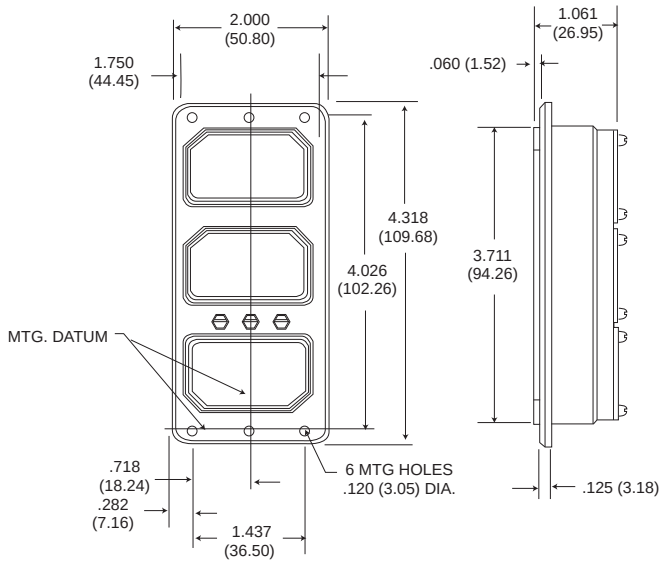

Four Gang

DPX4-33

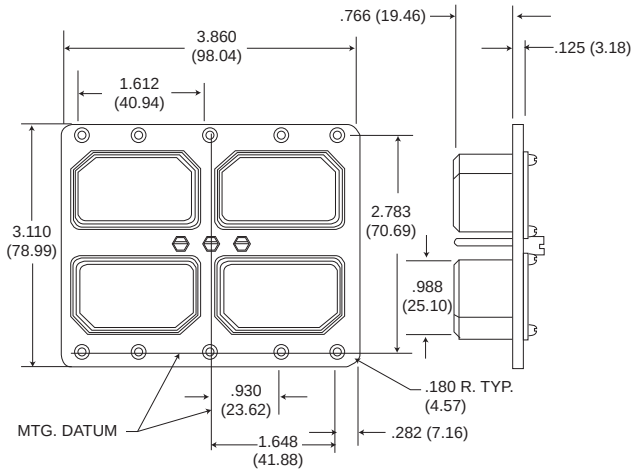

DPX4-34

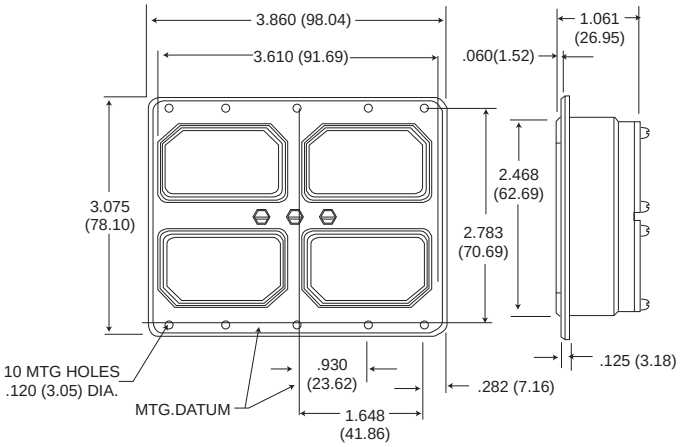

Dimensions shown in inches (mm)
Specifications and dimensions subject to change

Contact Arrangement Variations Solder Type (Captive Contacts)

NOTE: See pages 59-60 for Coaxial/Power Contact Termination Data

		Contact Arr.	No. of Contacts & Wire size	Test Voltage AC (RMS)	Contacts Arr. No.	PIN No. of Contacts	PIN Contact Type Code	PIN Contact Numbers	SOCKET No. of Contacts	SOCKET Contact Type Code	SOCKET Contact Numbers
C2	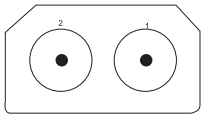	C2	2 coax (RG-9/U)	1000 (1,2)V matched impedance	C2	2	R	1-2	2	R	1-2
					C2C	2	AB	1-2		Consult Factory	
					C2M		Consult Factory		2	AC	1-2
C7	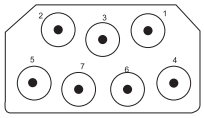	C7	7 coax	1000 (1-7)V	C7	7	K	1-7	4	F	1,2,4,5
									3	G	3,6,7
					C7A	7	A	1-7		Same as Pin	
					C7B	7	B	1-7		Same as Pin	
					C7B		Same as Socket (Use C7)		7	K	1-7
					C7M	7	C	1-7		Same as Pin	
					C7X	7	AA	1-7		Same as Pin	
					C7AA	7	Z	1-7		Same as Pin	
8*	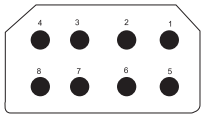	8	8 #12	2000V	8	N	1-8	8	0	1-8	
10C3*	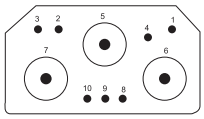	10C3	7 #20 3 coax	1500 (1-4, 8-10)V	10C3	7	L	1-4, 8-10		Same as Pin	
						3	I	5,6,7			
					A10C3	7	L	1-4, 8-10		Same as Pin	
						3	J	5,6,7			
B16C3*	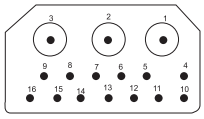	B16C3	13 #16 3 coax	1500 (4-16)V 1000 (1-3)V	B16C3	13	M	4-16		Same as Pin	
						3	A	1-3			
					C16C3	13	M	4-16		Same as Pin	
						3	B	1-3			
					G16C3	13	M	4-16		Same as Pin	
						3	C	1-3			
					J16C3	13	M	4-16		Same as Pin	
						3	K	1-3			
					ZE16C3	13	M	4-16		Same as Pin	
						3	Z	1-3			
					ZF16C3	13	M	4-16		Same as Pin	
						3	AA	1-3			
17	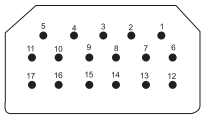	17	17 #20	2000V	17	17	L	1-17		Same as Pin	
23	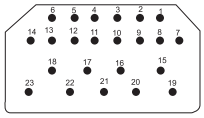	23	23 #20	2000 (15-23). 1500 (1-14)V.	23	23	L	1-23		Same as Pin	
25C3*	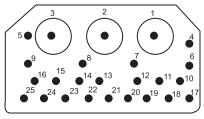	25C3	22 (#20). 3 coax	1500 (4-25)V. 1000 (1-3)V	25C3	22	L	4-25	22	L	4-25
						3	K	1-3	2	F	1,3
									1	G	2
					F25C3	22	L	4-25		Same as Pin	
						3	C	1-3			
					G25C3	22	L	4-25		Same as Pin	
						3	A	1-3			
					J25C3	22	L	4-25		Same as Pin	
						3	B	1-3			
					Q25C3	22	L	4-25		Same as Pin	
						3	Z	1-3			
					R25C3	22	L	4-25		Same as Pin	
						3	AA	1-3			

Contact Arrangement Variations Solder Type (Captive Contacts)

NOTE: See pages 59-60 for Coaxial/Power Contact Termination Data

					PIN			SOCKET		
	Contact Arr.	No. of Contacts & Wire Size	Test Voltage AC (RMS)	Contact Arr. No.	No. of Contacts	Contact Type Code	Contact Numbers	No. of Contacts	Contact Type Code	Contact Numbers
26* 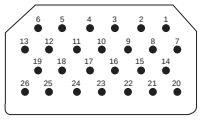	26	26 #16	1500V	26	26	M	1-26		Same as Pin	
30C4 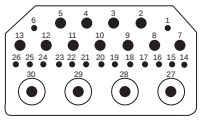	30C4	15 #20. 11 #16, 4 coax	1500 (2-5 & 7-13)V 1000 (1,6 & 14-26)V	A30C4	15 11 4	L M Z	1,6 14-26 2-5, 7-13 27-30		Same as Pin	
				B30C4	15 11 4	L M AA	1,6 14-26 2-5, 7-13 27-30		Same as Pin	
				C30C4	15 11 4	L M A	1,6 14-26 2-5, 7-13 27-30		Same as Pin	
32 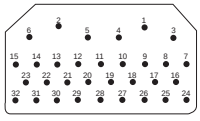	32	3 #16 29 #20	2000 (1-6) 1500 (7-32)V	32	29 3	L M	1,3,4,7-32 2,5,6		Same as Pin	
32C2* 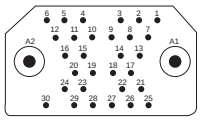	32C2	30 #20 2 coax	1500 (1-30)V 1000 (A1, A2)V	32C2	30 2	L K	1-30 A1, A2	30 2	L F	1-30 A1, A2
				A32C2	30 2	L A	1-30 A1, A2		Same as Pin	
				C32C2	30 2	L B	1-30 A1, A2		Same as Pin	
				D32C2	30 2	L C	1-30 A1, A2		Same as Pin	
				M32C2	30 2	L Z	1-30 A1, A2		Same as Pin	
				N32C2	30 2	L AA	1-30 A1, A2		Same as Pin	
40* 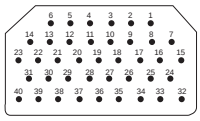	40	40 #20	1500V	40	40	L	1-40		Same as Pin	
40C1* 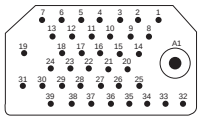	40C1	39 #20 1 coax	1500 (1-39)V 1000 (A1)V	40C1	39 1	L B	1-39 A1		Same as Pin	
				A40C1	39 1	L K	1-39 A1	39 1	L F	1-39 A1
				F40C1	39 1	L C	1-39 A1		Same as Pin	
				J40C1	39 1	L Z	1-39 A1		Same as Pin	
				K40C1	39 1	L AA	1-39 A1		Same as Pin	
				L40C1	39 1	L A	1-39 A1		Same as Pin	
45* 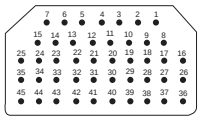	45	45 #20	1500V	45	45	L	1-45		Same as Pin	
57* 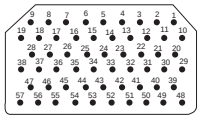	57	57 #20	1500V	57	57	L	1-57		Same as Pin	
67* 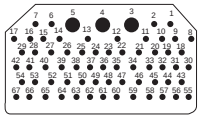	67	64 #20 3 #16	1000V	67	64 3	L M	1-2,6-65 3-5		Same as Pin	

Dimensions shown in inches (mm)
Specifications and dimensions subject to change

Contact Arrangement Variations, Crimp Type - DPX*MA/ME Series

NOTE: See pages 62-65 for Coaxial Contact data
See pages 57-58 for Crimp Contact data

		Contact Arr.	No. of Contacts & Wire Size	Test Voltage AC (RMS)	Contact Arr. No.	No. of Contacts	Contact Size or Code Letter	Contact Numbers
8	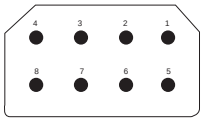	8	8 #12		8	8	12	1-8
D8	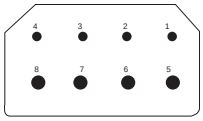	D8	4 #16, 4 #12		D8	4	16 12	1-4 5-8
W8**	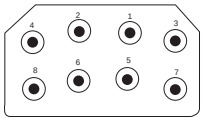	W8** (For MA) AW8 (For ME)	8 coax	1000V (1-8)V	W8 C8A C8B C8C C8E C8G C8H	8	coax G F H R S AB	1-8
10	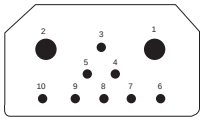	10	2 #8, 8 #20	1500V	10	2 8	B 20	1,2 3-10
A10	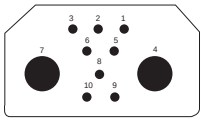	A10	8 #16, 2 #4	1500V	A10	8 2	16 4	1-3, 5, 6, 8-10 4, 7
10W3**	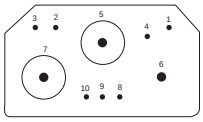	10W3**	7 #20, H.D., 3 coax	1500 (1-4, 8-10)V	10W3 A10C3 B10C3	7 3 7 3 7 3	20 H.D. coax 20 H.D. AC 20 H.D. AC	1-4, 8-10 5-7
B16W3**	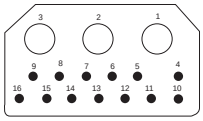	SOCKET ONLY B16W3	13 #16, 3 coax	1500 (4-16) 1000 (1-3)V socket side only (Not avaiable in ME series)	B16W3	13 3	16 coax	4-16 1-3
25W3	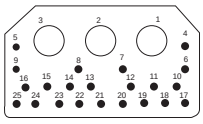	25W3	22 (#20) 3 coax	1500 (4-25)V, 1000 (1-3)V (Not available in ME series)	25W3 25A3 25B3 25D3	22 3 22 3 22 3 22 3	20 coax 20 C 20 D 20 B	4-25 1-3
26	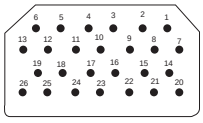	26	26 #16	1500V	26	26	16	1-26

**Crimp rear release coaxial contacts.

Contact Arrangement Variations, Crimp Type - DPX*MA/ME Series

NOTE: See pages 62-65 for Coaxial Contact data
See pages 57-58 for Crimp Contact data

		Contact Arr.	No. of Contacts & Wire Size	Test Voltage AC (RMS)	Contact Arr. No.	No. of Contacts	Contact Size or Code Letter	Contact Numbers
32W2	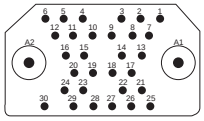	32W2** (For MA) A32W2 (For ME)	30 #20, 2 coax	1500 (1-30), 1000 (A1,A2)V	32W2	30 2	20 coax	1-30 A1,A2
					32A2	30 2	20 B	
					32B2	30 2	20 A	
					32C2	30 2	20 D	
					D32C2	30 2	20 J	
					32F2	30 2	20 P	
					32G2	30 2	20 C	
32W4	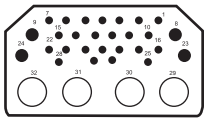	32W4** (For MA) A32W4 (For ME)	24 #20 H.D. 4 #16, 4 coax	1500 (1-28), 1000 (29-32)V	32W4	4 24 4	coax 20 H.D. 16	29-32 1-7, 10-22 25-28 8, 9, 23, 24
					32C4	4 24 4	S 20 H. D. 16	
					B32C4	4 24 4	H 20 H. D. 16	
					C32C4	4 24 4	R 20 H. D. 16	
					D32C4	4 24 4	G 20 H. D. 16	
					E32C4	4 24 4	AA 20 H. D. 16	
					H32C4	4 24 4	AB 20 H. D. 16	
36W7	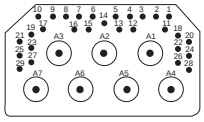	36W7**	29 #22 7 coax (Size 5)	1000	For coax contacts see page F-34			
40	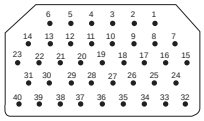	40	40 #20	1500V	40	40	20	1-40
40W1	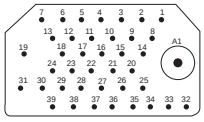	40W1** (For MA) A40W1 (For ME)	39 #20, 1 coax	1500 (1-39) 1000 (A1)V	40W1	39 1	20 coax	1-39 A1
					40B1	39 1	20 B	
					40F1	39 1	20 P	
					F40C1	39 1	20 J	
45	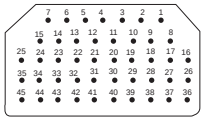	45	45 #20	1500V	45	45	20	1-45

**Crimp rear release coaxial contacts.

Dimensions shown in inches (mm)
Specifications and dimensions subject to change

Contact Arrangement Variations, Crimp Type - DPX*MA/ME Series

NOTE: See pages 62-65 for Coaxial Contact data
See pages 57-58 for Crimp Contact data

		Contact Arr.	No. of Contacts & Wire Size	Test Voltage AC (RMS)	Contact Arr. No.	No. of Contacts	Contact Size or Code Letter	Contact Numbers
57	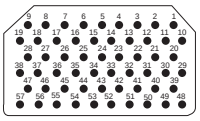	**57**	57 #20	1500V	57	57	20	1-57
67	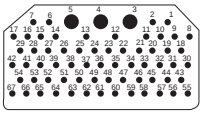	**67**	64 #20 H.D. 3 #16	1500 (3-5) 1000 (1, 2, 6-67)V	67	64 3	20 H.D. 16	1-2, 6-67 3, 4, 5
A106†	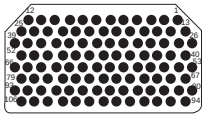	**A106†**	106 #22	1000V	A106	106	22	1-106

**Crimp rear release coaxial contacts.
†A106 arrangements have the POS-ALINE connector design. See below.
NOTE: Engaging force of each layout arrangement shall not exceed 45 lbs. maximum.

Positive Contact Alignment Design

For high density A106 contact arrangement

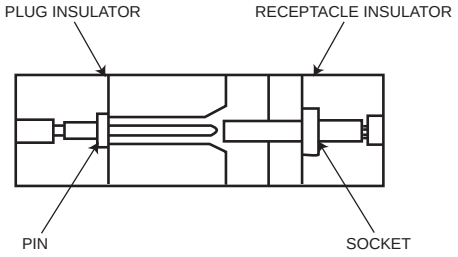

In the POS-ALIGN connector construction the entire pin contact is recessed in an individual cavity in the plug insulator while the sturdy socket members are exposed and extend from the connector receptacle face. There is a lead-in chamfer that guides the socket contact into the pin cavity assuring proper contact alignment during mating and protecting the pin contact from damage and wear.

Rear inserstion, release and extraction of crimp snap-in contacts

The ITT Cannon LITTLE CAESAR contact assembly permits contacts to be inserted, released, and extracted from the rear of the connector with a simply, expendable plastic tool.
The contact is inserted from the rear of the connector thru a cylindrical clip in the insulator until indented tines of the clip snap securely behind the contact shoulder. The contact is released as the plastic tool is inserted into the rear of the connector, expanding the tines beyond the contact shoulder, permitting contact extraction. The simplified contact design has a single holding shoulder and no undercuts for improved bend resistance.
Other features of the LITTLE CAESAR contact assembly include: hard dielectric socket face with lead-in chamfers for positive mating of contacts; good contact stability with minimum clearance between the contact and the insulator cavity wall; plus a “closed-down” design of the insulator’s hard dielectric around each pin contact.
This LITTLE CAESAR contact assembly was selected by the National Aerospace Standards Committee as the system to be used in a major industry connector specification, for vital programs demanding great operational reliability.
The LITTLE CAESAR contact assembly is currently available in the BKA, DPX*MA, DPK, DPDMA, and DPAMA Series.

Contact and Termination Tooling Data - Commercial

Crimp Contacts

The crimp contacts are shipped with the connector, not installed. Additional contacts may be ordered using the part numbers listed below. All tools must be purchased separately. The insertion/extraction tools listed are plastic type. Consult factory for more durable metal tools.

Contact Size	Type	Part Number: DPX MA Commercial	Part Number: DPX ME Commercial ⚠1	Wire Accom.	Crimp Tool Part Number	Locator Part Number	Insertion/ Extraction Tool (Part No.)	Layout Usage: DPX ME	Layout Usage: DPX MA
2222	Pin	030-1975-007	030-1975-005	22,24,26	M22520/2-01	M22520/2-23	CIT-DPXMA-22 M81969/1-01	A106	A106
	Socket	031-1113-007	031-1113-008						
2020	Pin	030-9081-000	030-2040-000	20,22,24	M22520/2-01 MS-3191-1 MS-3191-3	M22520/2-02 Std. Locator Std. Locator M22520/2-01	CIET-20 (274-7001-000)	10, A32W2, 40, A40W1, 45,57	10, 25W2, 32W2 40, 40W1, 45,57
	Socket	031-9134-001	031-1046-002						
2020HD	Pin	030-9081-003	030-1892-002	20,22,24	M22520/2-01 MS-3191-1	M22520/2-08 Standard	CIET-20 M81969/1-02 (980-0004-805)	10W3 A32W4, 67	10W3 32W4, 67
	Socket	031-9134-004	031-1047-002						
1616	Pin	030-9083-001	030-1893-002	16,18,20	M22520/1-01 MS-3191-1	M22520/1-02 Std. Locator	CIET-16 (274-7002-000)	D8, A10, 26, A32W4, 67	D8, A10, B16W3, 26, 32W4, 67
	Socket	031-9206-004	031-9206-021						
1212	Pin	030-1909-001	030-2045-000	12,14	M22520/1-01	M22520/1-11	CIET-12 (274-7003-000)	D8	8, D8
	Socket	031-1059-001	031-1059-002						
0808	Pin	030-1908-001	030-1908-001	8	CBT-600* CBT600B*	CCH8-1 Head CCHP-8-6	CET-8-2 (323-7004-000)	10	10
	Socket	031-1154-000	031-1154-000						
0406	Pin	030-2049-000	030-2049-000	6	CBT-600* CBT600B*	CCH4-1 Head CCHP-4-8	CET-4-8 (323-7008-000)	A10	A10
	Socket	031-1151-000	031-1151-000						

* Requires air line pressure of 80 to 100 psi.

These DPXME contacts are being superseded in favor of military DPXNE/NA contacts, this applies to all existing DPXME connector assemblies, except for size 20 contacts.

Electrical Data

Contact Size	Wire Size	Insulation (0.D.) Limits Inch (mm) Max.	Test Current per MIL-C-39029 Table VI	Max. Current for Tests (Amps) (Mil-C-39029)	Max. Potential Drop (Millivolts) at 25°C per MIL-C-39029
4	6	.310 (7.87)	60	60	33
8	8	.250 (6.35)	46	46	39
12	12	.135 (3.43)	23	23	63
	14		17	17	60
16	16	.103 (2.62)	13	13	68
	18		-	-	-
	20		7.5	-	75
20	20	.071 (1.80)	7.5	7.5	83
	22		-	-	-
	24		3	3.0	68
22	22	.054 (1.37)	5	5.0	110
	24		-	-	-
	26		2	2.0	80

Description of Modification Codes for Special Connector Insert Assemblies

Class	Series	DPX Insert Type
None	DPXA DPXB	Two (2) pieces, solder pot.
MA	DPXAMA DPXBMA	LITTLE CAESAR rear release contact retention assembly, crimp pot.
MAS	-	LITTLE CAESAR assembly, solder pot,
MB	-	LITTLE CAESAR rear release contact retention assembly, crimp pot, with separator.
MS	-	Ring-Loc, solder pot,
ME	-	Environmental, connector.
A*	-	Two (2) pieces, solder pot (Standard 2 pieces insert).
B*	-	Ring-Loc, solder pot. (See MS)
C*	-	(MAS) LITTLE CAESAR assembly, Solder pot.

*NOTE: When any two of these letters are used in combination, the inserts ("A" and "B") side have the style contacts indicated (see table opposite for examples).

Class	Series	DPX Insert Type
D*	-	(MA) LITTLE CAESAR assembly, crimp pot, (Cat. A)
E*	-	Metal plates.
F*	-	Rear release, crimp (MB type only).
DPX2-	-	Standard 2 pieces, solder pot, both sides, Ex: DPX2-57S57S-33-0001
DPX2MA	-	Standard LITTLE CAESAR asembly, crimp pot both sides Ring-loc coax. EX:DPX2MA-57S57S-33-0001
DPX2MAS	-	LITTLE CAESAR assembly, soler po, both sides Ring-Loc coax. EX: DPX2MAS-57S57S-33-001
DPX2MS-	-	Ring-Loc, solder pot. Layout 25C3 pin only and 40C1 Pin and socket. EX: DPX2MS-40W1S40W1S-33-0001

Class	Series	DPX Insert Type
DPX2CA-/ DPX2AC- (Reverse CA)	-	A side: (MAS) LITTLE CAESAR assembly, solder pot (32W2S) B side; Standard 2 Piece, solder pot (57S). Ex: DPX2CA-32W2S57S-33-0001
DPX2AF	-	A side: Standard solder pot. B side: Rear release crimp with separator. Ex: DPX2AF-13S26S-33B-0001
DPX2BA	-	A side: Ring-Loc solder pot (40W1S). B Side: 2 Piece, Solder Pot (57S). Ex: DPX2BA-40W1S57S-33-0001
DPX2DA	-	A side: (MA) LITTLE CAESAR assembly, Crimp (67S). B Side: 2 Piece, solder pot (57S). Ex: DPX3DA-67S57S-33-0001
DPX2EB	-	A side: Metal plates for grounding (Coaxes). B side: Ring-Loc, solder pot. Ex: DPX2EB-C1P40W1P-34B-0001

Contact and Termination Tooling Data

DPXMA (LIF) Crimp Contacts

Contact Size and Part Numbers			Crimp Tooling					Insertion/ Extraction Tooling				Wire Size		
	Part Number		Tool P/N		Se-lec tor#	Locator P/N			ITT Cannon					
Size	Pin	Socket	MIL Spec	ITT Cannon		MIL Spec	ITT Cannon	MIL Spec	Insertion	Extraction	Ins./Ext.	AWG	Insul Dia. Max.	Strip Length
222	030-2259-000	031-1287-000	M22520 /2-01	995-0001 -584	3 3 4	M22520 2-23	995-0002 -015	M81969 /1-01	CIT-DPXMA-22-1 Metal (070256-0000)	CET-DPXMA-22 Metal (070317-0000)	(980-0004-804) Metal Tip	26 24 22	.054 (1.37)	.130/.110 (3.30/2.54)
2020HD	030-2273-000	031-1302-000	M22520 /2-01	995-0001 -584	6 7	M22520 /2-08	995-0001 -604	M81969 /1-02	-	-	(980-0004-805) Metal Tip	22 20	.071 (1.80)	.167/.147 (4.24/3.73)
1616	030-2280-000	031-1303-000	M22520 1-01	995-0001 -585	4 5 6	M22520 /1-02	995-0001 -736	M81969 /1-03	-	CET-16-9 Plastic (323-7001-000)	(980-0004-806) Metal Tip	20 18 16	.103 (2.62)	.270/.230 (6.86/5.84)
1212	030-2286-000	031-1308-000	M22520 1-01	995-0001 -585	7 8	M22520 /1-11	995-0002 -027	M81969 /14-04	-	CET-12-4 Plastic (323-7002-000)	CIET-12 Plastic (274-7003-000)	14 12	.135 (3.43)	.270/.230 (6.86/5.84)

N Type Thermocouple NICROSIL-NISIL

DPXMA Thermocouple Contacts

K Type Thermocouple CHROMEL / ALUMEL

J Type Thermocouple IRON-CONSTANTAN

Contact Size and Part Numbers			Crimp Tooling					Insertion/ Extraction Tooling				Wire Size		
	Part Number		Tool P/N		Se-lec tor#	Locator P/N			ITT Cannon					
Size	Pin	Socket	MIL Spec	ITT Cannon		MIL Spec	ITT Cannon	MIL Spec	Insertion	Extraction	Ins./Ext.	AWG	Insul Dia. Max.	Strip Length
2222 Alumel	030-1975-009	031-1113-009	M22520 /2-01	995-0001 -584	3 3 4	M22520 /2-23	995-0002 -015	M81969 /1-01	CIT-DPXMA-22-1 Metal (070256-0000)	CET-DPXMA-22 Metal (070317-0000)	(980-0004-804) Metal Tip	26 24 22	.054 (1.37)	.130/110 (3.30/2.54)
2222 Chromel	030-1975-010	031-1113-010												
20HD Chromel	030-2163-000	031-1243-000	M22520 /2-01	995-0001 -584	6 7	M22520 /2-08	995-0001 -604	M81969 /1-02	-	-	(980-0004-805) Metal Tip	22 20	.071 (1.80)	.167/.147 (4.24/3.73)
20HD Alumel	030-2162-000	031-1242-000	M22520 /2-01	995-0001 -584	6 7	M22520 /2-08	995-0001 -604	M81969 /1-02	-	-	(980-0004-805) Metal Tip	22 20	.071 (1.80)	.167/.147 (4.24/3.73)
1616 Chromel	030-1898-000	031-1035-000	M22520 1-01	995-0001 -585	4 5 6	M22520 /1-02	995-0001 -736	M81969 /1-03	-	CET-16-9 Plastic (323-7001-000)	(980-0004-806) Metal Tip	20 18 16	.103 (2.62)	.270/.230 (6.86/5.84)
1616 Alumel	030-1897-000	031-1034-000	M22520 1-01	995-0001 -585	4 5 6	M22520 /1-02	995-0001 -736	M81969 /1-03	-	CET-16-9 Plastic (323-7001-000)	(980-0004-806) Metal Tip	20 18 16	.103 (2.62)	.270/.230 (6.86/5.84)
1616 Constantan	030-1905-000	031-1061-000	M22520 1-01	995-0001 -585	4 5 6	M22520 /1-02	995-0001 -736	M81969 /1-03	-	CET-16-9 Plastic (323-7001-000)	(980-0004-806) Metal Tip	20 18 16	.103 (2.62)	.270/.230 (6.86/5.84)
1616 Constantan	030-1904-000	031-1060-000	M22520 1-01	995-0001 -585	4 5 6	M22520 /1-02	995-0001 -736	M81969 /1-03	-	CET-16-9 Plastic (323-7001-000)	(980-0004-806) Metal Tip	20 18 16	.103 (2.62)	.270/.230 (6.86/5.84)

See DPDMA contact for standard size 20 thermocouple contacts

Coaxial/Power Contact Termination Data (Retained by Captive Insulator Assy.)

Rear Extension from insulator	Contact type code	Part Number Pin	Part Number Socket	Cable Accommodation	Layout Accommodation
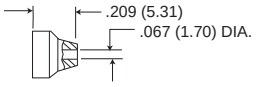	A	249-0672-000	249-0671-000	RG-187/U RG-188/U	C7A, B16C3, G25C3, C30C4, A32C2, L40C1
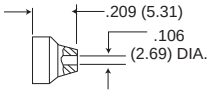	B	249-0702-000	249-0703-000	RG-180/U RG-195/U	C7B, J25C3, C16C3, C32C2, 40C1
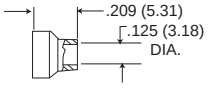	C	249-0749-000	249-0750-000	RG-55/U RG-58/U RG-223/U	C7H, G16C3, F25C3, D32C2, F40C1
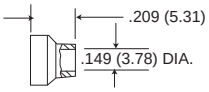	D	-	249-0518-000	RG-59/U	C7J, H16C3, H25C3, F32C2, E30C4, E40C1
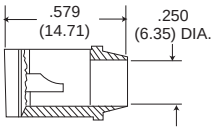	I	249-0365-000	249-0353-000	RG-7/U	10C3
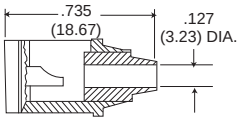	J	249-0257-000	249-0268-000	RG-55/U RG-58/U RG-223/U	A10C3
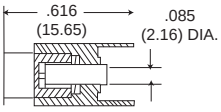	K	249-0583-000 024-0015-000 253-0120-000	249-0591-000 024-0015-000 253-0120-000	RG-187/U RG-188/U	25C3, 32C2, J16C3, A40C1, C7, C7D A40C1 pin only, use C40C1 for socket
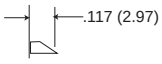	L	330-0144-000	330-0145-000	7.5 amp #20 wire	See Note 1
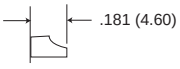	M	030-0056-010	031-0016-008	13 amp #16 wire	See Note 2
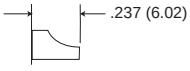	N	030-0017-015	-	23 amp	8
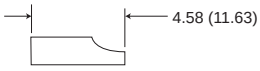	O	-	031-0059-008	#12 wire	8

* These coaxial contacts are supplied with the connector.

Dimensions shown in inches (mm)
Specifications and dimensions subject to change

Coaxial/Power Contact Termination Data (Retained by Captive Insulator Assy.)

Rear Extension from insulator	Contact type code	Part Number		Cable Accommodation	Layout Accommodation
		Pin	Socket		
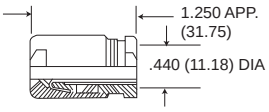	**R**	249-1521-000	249-1522-000	RG-9/U, RG-214/U	C2
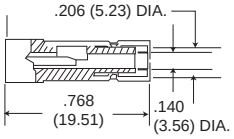	**Z**	249-1624-000	249-1598-000	RG-58/U with Capitve Contact	C7AA, ZE16C3 Q25C3, A30C4 M32C2, J40C1
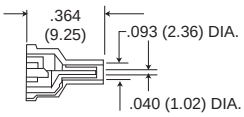	**AA**	249-1599-000	249-1622-000	RG-196/U with Captive Contact	C7X, ZF16C3, R25C3, B30C4, N32C2, K40C1
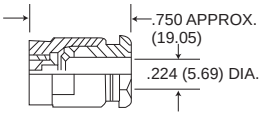	**AB**	249-1554-000	249-1822-000	RG-58/U	C2C
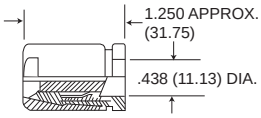	**AC**	Consult Factory	249-5027-001	RG-9/U RG-214/U	C2M

NOTES: 1. Code L-10C3, A10C3,17, 23, 25C3, E25C3, F25C3, G25C3. H25C3,J25C3, Q25C3, R125C3, 30C4, A30C4, C30C4, D30C4, E30C4, 32, 32C2, A32C2, C32C2, 032C2, F32C2, M32C2, N32C2
Q32C2, 40, 40C1, B40C1, D40C1, E40C1, F40C1, H40C1, J40C1, K40C1, L40C1, 45, 57, 67,
2. Code M-B16C3, C16C3, G16C3, H16C3, M16C3, ZE16C3, ZF16C3, 26, 30C4, 32, 67

Suggested Cable Trim Dimensions

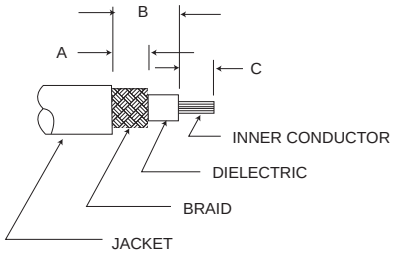

	Inches			Millimeters		
Code Letter	A	B	C	A	B	C
A	.166/.146	.358/.318	.14	4.22/3.71	9.08/8.08	3.55
B	.166/.146	.358/.318	.14	4.22/3.71	9.08/8.08	3.55
C	.166/.146	.358/.318	.14	4.22/3.71	9.08/8.08	3.55
D	.166/.146	.358/.318	.14	4.22/3.71	9.08/8.08	3.55
E	.166/.146	.358/.318	.14	4.22/3.71	9.08/8.08	3.55
I	.166/.146	.39	.166/.146	4.22/3.71	9.91	4.21/3.71
J	.166/.146	.55	.166/.146	4.22/3.71	13.97	4.21/3.71
K	.198/.178	.488/.428	.25	5.03/4.52	11.38/10.87	6.35
Z	.08	.41	.23	2.03	10.41	5.84
AA	.11	.23	.195/.175	2.79	5.84	4.95/4.45
AB	.238/.198	.233/.193	.447/.427	6.04/5.03	5.92/4.90	11.35/10.89
AC	.345/.281	.516/.484	.359/.296	8.71/7.14	13.1/12.3	9.12/7.52
R	.238/.198	.233/.193	.582/.542	6.05/5.03	5.92/4.90	14.8/13.8

Coaxial Cable Assembly

ITT Cannon recommends resistance soldering for all solder contacts, particularly for RF cable where excessive heat will damage the dielectric. Wires should be pre-tinned. Bushing, endbells, and junction shells (where applicabe) must be slipped over wire bundles before soldering is started. Consult factory for types not shown. The mechanical steps in wiring coaxials described below.

For Codes A, B, C, D, and E

1. Cut cable evenly. Trim to dimensions as shown on page 60. Care should be taken not to injure the conductor or dielectric.
2. Remove inner contact from coaxial assembly and solder it to inner conductor of cable.
3. Push inner contact back into coaxial assembly.
4. Pull outer conductor over coaxial shell, and solder.
5. Apply shrink sleeving after assembly.

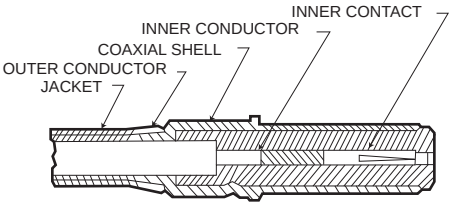

For Codes I and J

1. Cut cable evenly. Trim to dimensions as shown on page 60. Care should be taken not to injure the conductor or dielectric.
2. Comb braid, tin conductor and remove flux.
3. Remove solder pot cover. Insert cable and solder conductor to contact. The dielectric should butt against contact solder pot.
4. Replace solder pot cover and solder braid to ferrule.
5. Apply shrink sleeving after assembly.

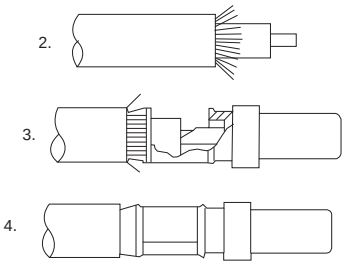

For Codes K

1. Cut cable evenly. Trim to dimensions as shown on page 60. Care should be taken not to injure the conductor or dielectric.
2. Unscrew cap and remove spacer and inner contact from coaxial assembly.
3. Push cable through center of cap and spacer.
4. Solder inner. contact to inner conductor of cable.
5. Push inner contact back into coaxial shell assembly and attach cap.
6. Separate outer conductor of cables into two pigtails 180˚ apart.
7. Attach on pigtail to each end of cap strip and solder.
8. Apply shrink sleeving after assembly.

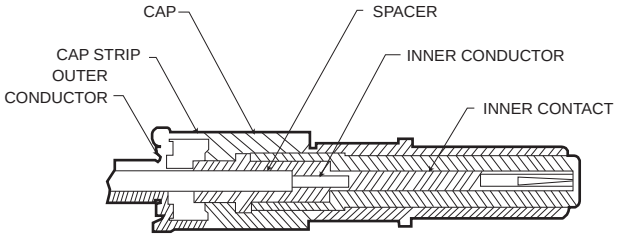

For Codes Z and AA

1. Cut cable evenly. Trim to dimensions as shown on page 60. Care should be taken not to injure the conductor or dielectric.
2. Solder inner conductor to coaxial contact through side slot in coaxial with outer sleeve pushed back on cable.
3. Pull sleeve forward over braid and solder through holes in sleeve.
4. Solder sleeve to coaxial body.

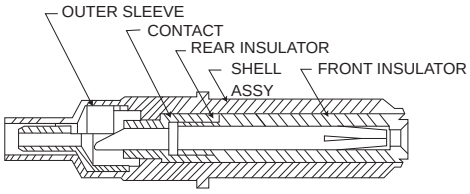

Dimensions shown in inches (mm)
Specifications and dimensions subject to change

Coaxial Contacts

NOTES: 1. The "X" dimension is take from the rear of the shell.
2. Codes G and S are inactive for new design. Use codes AD and AE.
3. Code AA is designed for installations that have limited space in the terminal area. Use code AG for standard installations.

*P for pin; S for socket.

Codes A, B, C, D, E, H, P, R

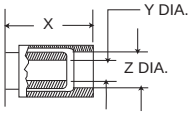

Arr. Used In	Code Letter	Cable Accommodation	Part Number*	Contact Retention	X Max.	Y Dia.	Z Dia.	Crimp Tool	Extraction Tool
B16W3 25W3 32W2 40W1	A	*RG-59/U RG-62/U	P-249-1397-000	Ring Loc	.760 (19.30)	.158 (4.01)	.275 (6.53)	CA58073	CET-C4 (038869-0004)
			S-249-1398-000			.148 (3.76)	.247 (6.27)		
	B	*RG-58/U	P-249-1399-000	Ring Loc	.760 (19.30)	.128 (3.25)	.211 (5.36)		
			S-249-1400-000			.118 (3.00)	.201 (5.10)		
	C	*RG-180/U RG-195/U	P-249-1401-000	Ring Loc	.760 (19.30)	.128 (3.25)	.166 (4.22)		
			S-249-1402-000			.118 (3.00)	.156 (3.96)		
	D	RG-174/U, RG-187/U RG-179/U, RG-188/U	P-249-1403-000	Ring Loc	.760 (19.30)	.072 (1.83)	.121 (3.07)	CCT-HX4-524 CCT-408M	
			S-249-1404-000			.062 (1.57)	.111 (2.82)		
	E	RG-178/U RG-196/U	P-249-1405-000	Ring Loc	.760 (19.30)	.072 (1.83)	.091 (2.31)		
			S-249-1406-000			.062 (1.57)	.081 (2.06)		
W8 32W4	H	RG-174/U, RG-187/U RG-179/U, RG-188/U	P-249-1633-000	LITTLE CAESAR	.592 (15.04)	.072 (1.83)	.121 (3.07)	CCT-HX4-524 CCT-408M	CET-C8 (323-7011-000)
			S-249-1634-000			.062 (1.57)	.111 (2.82)		
B16W3 25W3 32W2 40W1	P	*RG-58/U with nylon braid over jacket	S-249-1608-000	Ring Loc	.760 (19.30)	.128 (3.25)	.235 (5.97)	Crimp CA58073	CET-C4 (038869-0004)
						.118 (3.00)	.215 (5.46)		
W8 32W4	R	*RG-178/U RG-196/U	P-249-1670-000	LITTLE CAESAR	.592 (15.04)	.072 (1.83)	.091 (2.31)	CCT-HX4-524 CCT-408M	CET-C8 (323-7011-000)
			S-249-1671-000			.062 (1.57)	.081 (2.06)		

***IMPORTANT: These coaxials can only be used in the DPX*MAS or DPX*MB Connector Series.**

Codes F, S, T

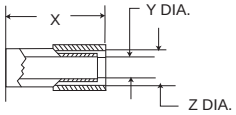

W8 32W4	F	RG-59/U RG-62/U	P-249-1474-000	LITTLE CAESAR	.775 (19.68)	.158 (4.01)	.238 (6.04)	CA58073 CCT-HX3-156	CET-C8 (323-7011-000)
			S-249-1471-000			.148 (3.76)	.228 (5.79)		
	S	RG-55/U RG-142/U	P-249-1958-000	LITTLE CAESAR	.592 (15.04)	.130 (3.30)	.238 (6.04)	CA58073 CCT-HX3-156	CET-C8 (323-7011-000)
			S-249-1959-000			.120 (3.05)	.228 (5.79)		
	T	RG-59/U RG-62/U	P-249-1960-000	LITTLE CAESAR	.592 (15.04)	.158 (4.01)	.238 (6.04)		
			S-249-1961-000			.148 (3.76)	.228 (5.79)		

Codes G

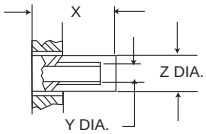

W8 32W4	G	RG-58/U	P-249-1631-000	LITTLE CAESAR	.500 (12.70)	.130 (3.30)	.211 (5.36)	CCT-HX4-524 CCT-408M	CET-C8 (323-7011-000)
			S-249-1632-000			.120 (3.05)	.201 (5.10)		

Codes J

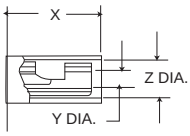

W16W3 25W3 32W2 40W1	J	RG-58/U	P-249-1388-000	Ring Loc	798 (20.27)	.130 (3.30)	.273 (6.93)	Solder	CET-C4 (038869-0004)
			S-249-1390-000			.120 (3.05)	.263 (6.68)		

Coaxial Contacts

CODE K

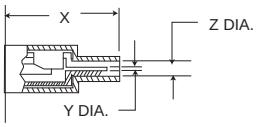

Arr. Used In	Code Letter	Cable Accommodation	Part Number*	Contact Retention	X Max.	Y Dia.	Z Dia.	Crimp Tool	Extraction Tool
B16W3 25W3 32W2 40W1	K	RG-178/U RG-196/U	P-249-1384-000	Ring Loc	.906 (23.01)	.045 (1.14)	.098 (2.49)	Solder	CET-C4 (038869-0004)
			S-249-1413-000			.035 (0.89)	.088 (2.24)		

CODE L

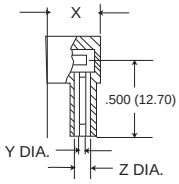

B16W3 25W3 32W2 40W1	L	RG-178/U RG-196/U	P-249-1386-000	Ring Loc	.518 (13.16)	.045 (1.14)	.098 (2.49)	Solder	CET-C4 (038869-0004)
			S-249-1414-000			.035 (0.89)	.088 (2.24)		

CODE U

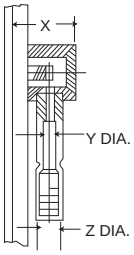

W8	U	RG-174/U, RG-187/U RG-179/U, RG-188/U		LITTLE CAESAR	.425 (10.80)	.069 (1.75)	.117 (2.97)	CCT-C10	CET-C8 (038869-0004)
			S-249-1883-000			.059 (1.50)	.107 (2.72)		

CODE V, AC

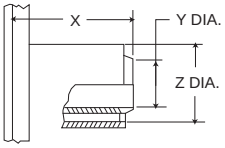

10W3	V	RG-115/U	P-249-1956-000	LITTLE CAESAR	.800 (20.32)	.260 (6.60)	.356 (9.04)	Buchanan 612991	CET 4-8 (323-7008-000)
			S-249-1957-000			.254 (6.45)	.349 (8.86)		
	AC	RG-58/U		LITTLE CAESAR	.800 (20.32)	.205 (5.21)	.356 (9.04)		
			S-249-1977-000			.199 (5.05)	.349 (8.86)		

CODE AA, AB, AD, AE, AF, AG

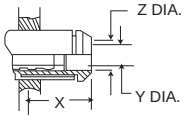

W8 32W4	AA	RG-178/U RG-196/U	P-249-1968-000	LITTLE CAESAR	.260 (6.60)	.088 (2.24)	.126 (3.20)	T & B #WT400	CET-C8 (323-7011-000)
						.084 (2.13)	.122 (3.10)		
	AB	RG-180/U RG-195/U	P-249-1982-000	LITTLE CAESAR	.575 (14.60)	.114 (2.90)	.168 (4.27)	Daniels HX4-210	
			S-249-1983-000			.104 (2.64)	.158 (4.01)		
	AD	RG-58/U	P-249-2017-000						
			S-249-2018-001						
	AE	RG-142/U	P-249-2019-001						
			S-249-2020-001						
	AF	RG-174/U, RG-187/U RG-179/U, RG-188/U	P-249-1633-004						
			S-249-1634-003						
	AG	RG-178/U RG-196/U	P-249-2061-000						
			S-249-2062-001						

Dimensions shown in inches (mm)
Specifications and dimensions subject to change

DPX*MA/ME Coaxial Contact Data (for environmental requirements)

Components/Accessories

NOTE: The A32W2 & A40W1 (Ring Type Retention); AW8 & A32W4 (LITTLE CAESAR Renention) Coaxial Contact arrangements have been redesigned to provide ease of insertion/removal of the coaxial contacts. Sealing is accomplished with the addiction of sealing sleeves provided with the coaxial contact assembly.

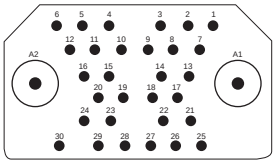

32W2 (MA Version)
A32W2 (ME Version)

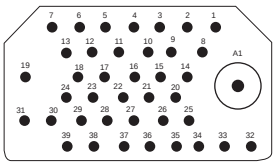

40W1 (MA Version)
A40W1 (ME Version)

RING TYPE RETENTION (A32W2 & A40W1 CONTACT ARRANGEMENTS)

Part Number*		Cable Accommodation		Ins. Dia. Size/Max.	'A' Trim Dim.	Crimp Tool
Without Seal (MA)	Sealed (ME)	Seal 1	Seal 2			
P-249-1397-001	P-249-1397-002	X	RG59B, RG62A	.249 (6.32)	.435 (11.05)	CA58073
S-249-1398-003	S-249-1398-002				.415 (10.54)	
P-249-1399-001	P-249-1399-002	RG58B	X	.200 (5.08)	.460 (11.68)	CA58073
S-249-1400-003	S-249-1400-002				.440 (11.18)	
P-249-1401-001	P-249-1401-002	RG195	RG180B	.158 (4.01)]	.460 (11.68)	CA58073
S-249-1402-003	S-249-1402-002				.440 (11.18)	
P-249-1403-001	P-249-1403-002	RG179B	RG174, RG179B,	.113 (2.87)	.460 (11.68)	CCT-406M
S-249-1404-003	S-249-1404-002		RG316		.440 (11.18)	
P-249-1405-001	P-249-1405-002	RG179B, RG196	X	.083 (2.11)	.480 (12.19)	CCT-406M
S-249-1406-003	S-249-1406-002				.460 (11.68)	

*P for pin, S for socket
†Unsealed accomodates both Seal 1 & Seal 2 Cables.
††For use with connectors supplied less grommet (Code 29**, etc.)

Cable Trim Dimensions

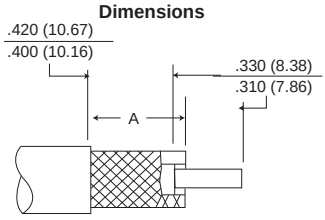

Coaxial Contact Assembly Recommendations
(For Codes A, B, C, D, E, J, K, L and P)

1. Center contact, rear insulator, crimp ring, support bushing and seal sleeve are packaged separately and shipped with the coaxial assembly.
2. Use impact extraction tool no. CET-C4 (038869-0004). An insertion tool is not required. (See Item 4).
3. Cable Assembly Instructions
   Step 1- If applicable, determine which portion of seal sleeve should be used. If seal 2 is used, cut off seal 1 portion
   Step 2 - In sequence, place seal sleeve, support bushing and crimp ring over cable jacket.
   Step 3 - Trim cable per illustration.
   Step 4 - Place rear insulator over dielectric.
   Step 5 - Solder innerconductor to center contact.
   Step 6 - Insert soldered cable firmly into coaxial with shielding over coaxial shell.
   Step 7 - Pull crimp ring forward until stopped and crimped.
   Step 8 - Insert coaxial assembly into connector until engaged. Push support bushing into grommet until shoulder rest on tublular extension. Then pull seal sleeve forward until it is snug against grommet.
4. To extract coaxial, push back seal sleeve and support bushing. Then push out coaxial from engaging end with CET-C4 (038869-0004) impact tool.
5. When crimping with CA58073 crimp tool, care should be taken to avoid flaring the front end of the crimp ring. Place Crimp jaw so that the second tooth of the indentors is over the end of the crimp ring.
6. To facilitate extraction of contacts and avoid splaying the length of free cable adjacent to the rear surface of the connector should not be less then 2.000 (50.80).

WITHOUT SEAL

(For Codes A, B, C, D, E, J, K, L and P)

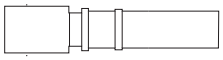

SOCKET

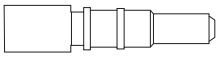

PIN

SEALED

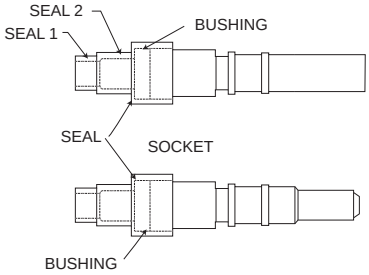

PIN

DPX*MA/ME Coaxial Contact Data (for environmental requirements)

Components/Accessories

With Seal
CU 249-0000-047 & -045

Without Seal
CU 249-0000-044 & -046

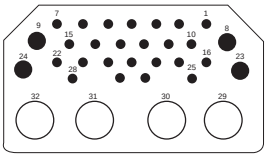

32W4 (MA Version)**
A32W4 (ME Version)

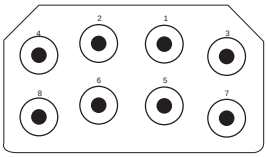

W8 (MA Version)**
AW8 (ME Version)

Cable Trim Dimensions

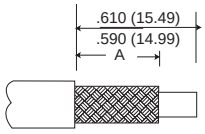

SOCKET

PIN

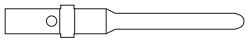

LITTLE CAESAR® CONTACT RETENTION (A32W4 & AW8 CONTACT ARRANGEMENTS)

Part Number*		Cable Accommodation†		Ins. Dia. Size/Max.	'A' Trim Dim.
Without Seal†† (MA)	**Sealed (ME)**	**Seal 1**	**Seal 2**		
P-249-1633-004	P-249-1633-003	RG179	RG174, RG316, RG179B	.111 (2.82)	.350 (8.89)
S-249-1634-003	S-249-1634-002				.330 (8.38)
P-249-1982-000	P-249-1982-001	RG180B	RG195	.158 (8.89)	.260 (6.60)
S-249-1983-000	S-249-1983-001				.250 (6.35)
P-249-2017-001	P-249-2017-000	RG58C	X	.196(4.98)	.260 (6.60)
S-249-2018-001	S-249-2018-000				.250 (6.35)
P-249-2019-001	P-249-2019-000	RG142B	X	.196 (4.98)	.260 (6.60)
S-249-2020-001	S-249-2020-000				.250 (6.35)
P-249-2061-001	P-249-2061-000	RG178B	X	.075 (1.90)	.260 (6.60)
S-249-2062-001	S-249-2062-000				.250 (6.35)

*P for Pin. S for Socket
Unsealed accommodates both Seal 1 & Seal 2 cables. CU DWGS with seal 249-0000-044 and 249-0000-045
For use with connector supplied less grommet (Code-29**, etc.). CU DWGS without seal 249-0000-047 and 249-0000-046

Coaxial Contact Assembly and Extraction Recommendations

1. Use Crimp Tool No. DIE Y211 (995-0002-249), Tool M22520 / 5-01 (995-0001-761).
2. Use extraction tool No. CET-C8. An insertion tool is not required. (See Note 5).
3. Center contact, rear insulator, crimp ring, support bushing (not applicable to RG58/RG142 coaxials), seal sleeve, front insulator, shell and ferrule are shipped unassembled in a common container.
4. Cable Assembly Instructions:
   Step 1 - If applicable, determine which portion of seal sleeve should be used. If seal 2 is used, cut off seal 1 portion.
   Step 2 - In sequence, place seal sleeve, support bushing and crimp ring over cable jacket.
   Step 3 - Trim cable per illustration.
   Step 4 - Comb out braid and flare out ends to permit entry of ferrule.
   Step 5 - Complete termination per illustration. (See below)
5. To extract: coaxial, push back seal sleeve and support bushing. Slip cable into extraction tool. Push tool into insert until it contacts coaxial retaining shoulder. Grip both cable and tool with one hand and pull coaxial rearward out of insert cavity.

WITHOUT SEAL

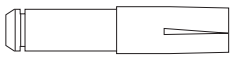

SOCKET

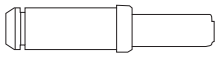

PIN

SEALED

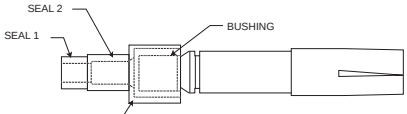

SOCKET

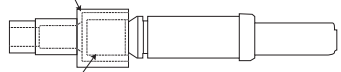

PIN

6. To facilitate extraction of contacts and avoid splaying, the length of free cable adjacent to the rear surface of the connector should not be less than 2.000 (50.80).

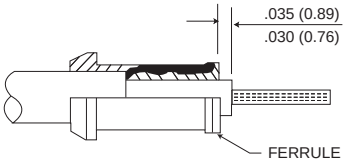

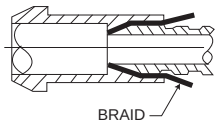

A. Carefully push inner conductor through rear insulator.
B. While holding rear insulator firmly against ferrule, trim conductor to .156 (3.96)/.146 (3.71) dimension.
C. Place contact over conductor and solder.

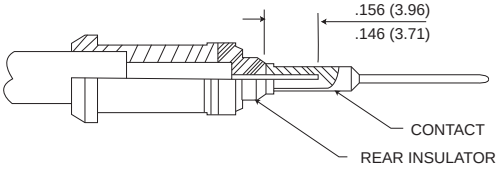

A. Push ferrule under braid as far as it will go. Trim off braid extending beyond shoulder of ferrule, if necessary.
B. While holding ferrule in place pull crimp sleeve forward over braid until it is tight against shoulder an ferrule. Pull firmly against face of ferrule to make sure it is up tight.
C. Trim dielectric to the .035 (0.89)/.030 (0.76) dimension.

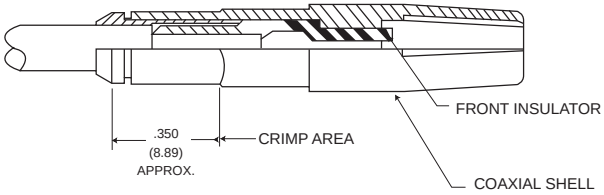

A. Place front insulator over contact and then push assembly into coaxial shell.
B. Place parts in jaw of crimp tool. Locate jaws at start of chamfer on crimp sleeve. Press sleeve firmly into coaxial shell and crimp.
C. After assembled coaxial is inserted into connector, push support bushing into grommet until shoulder rests on tubular extension. Then pull sealing sleeve forward until it is snug on grommet.

Dimensions shown in inches (mm)
Specifications and dimensions subject to change

Coaxial Cable Assembly Recommendations

LITTLE CAESAR Contact Assembly Data

For Codes F, S and T

1. Strip and trim cable as shown on page 60.
2. Solder inner conductor to coaxial contact with crimp ring over braid and rear insulator over inner conductor.
3. Insert cable into coaxial with shell under braid. Crimp ring with Cannon crimp tool CA58073.

For Codes G, H and R

1. Strip and trim cable as shown on page 60.
2. Solder inner connector to coaxial contact with crimp ring pushed back on cable.
3. Insert cable into coaxial and pull ring forward over braid. Crimp ring with Cannon crimp tool CA58073-0001 or CCT-408M. After crimping, crimp ring must not exceed .252 (6.40) diameter.

For Codes U

1. Strip and trim cable as shown on page 60.
2. Slide crimp ring over braid and jacket of cable.
3. Unbraid exposed portion of braid and fold braid wires backward over outside of crimp ring.
4. Insert prepared wire into right angle fitting of shell assembly. Conductor should be aligned in slot of the center contact. Crimp with Cannon tool CCT/C10.
5. Solder center conductor of cable to contact. Insert cap and solder in place.

For Codes AA

1 . Slip ferrule over cable jacket. Trim outer jacket. Comb out braid as shown. Retrim braid.
2. Bend up combed out braid at right angles to cable. Slide ferrule up to bend and fold braid back against ferrule.
3. Slide rear insulator over dielectric as shown. Press insulator firmly against folded back braid and trim dielectric flush with insulator. Then cut inner conductor to length shown.
4. Place contact over conductor. Press contact and insulator firmly against braid and solder contact to conductor.
5. Push cable assembly into shell, pressing against rear of ferrule and crimp area shown with T. & B. #WT-400 Crimp Tool while making sure parts do not move out of place.

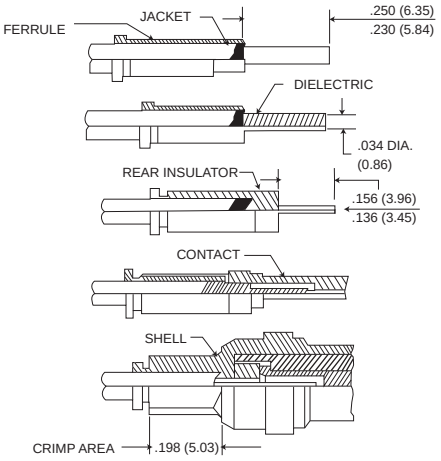

For Codes AC

1 . Trim jacket to .680 (17.27)/.660 (16.76) dimension. Then slide ferrule over braid until it stops against jacket, and comb out exposed portion of braid.
2. Fold combed braid over ferrule as shown. Then trim dielectric to .070 (1.78)/.060 (1.52) dimension and slide rear insulator over dielectric until it presses against braid.
3. Press insulator against braid and trim inner conductor to .247 (6.27)/.237 (6.02) dimension. Then place contact over conductor and crimp with MS3191-3 (do not use MS3191-1). Press parts firmly against locator during crimping operation.
4. Place front insulator over contact. Push parts into coaxia! shell. While holding parts firmly against stop shoulder in coaxial shell, place jaw of crimp tool at back end of shell and crimp. Use Buchanan crimp tool #612991 (.343 [8.71) across hex].

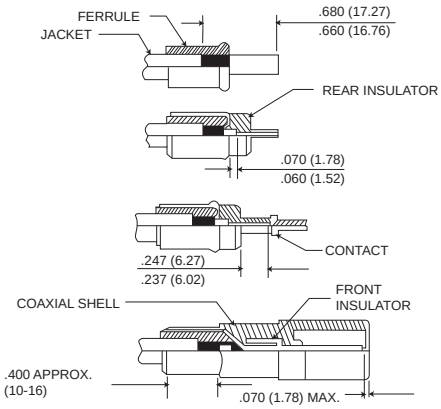

Coaxial Cable Assembly Recommendations (Continued)

For Code V

1. Trim cable to dimensions shown below.
   A. Push ferrule under braid as far as it will go and press braid down tightly around ferrule.
   B. Solder ends of braid to ferrule by applying a small amount of solder. Avoid excess solder as it would cause braid to swell up.
   C. Remove any solder exceeding the .349 (8.86) max. diameter.
   D. Check the .075 (1.90) max. dielectric extension, retrim if necessary.
3. A. Place rear insulator over dielectric and conductor into contact.
   B. Solder contact to conductor through access hole.
   C. Remove excess solder from outside of contact.
4. A. Place front insulator over contact.
   B. Push parts into coaxial shell.
   C. While holding parts firmly against stop shoulder in coaxial shell, place jaw of crimp tool at back end of shell and crimp, use Buchanan crimp tool #612991 [.343 (8.71) across hex].

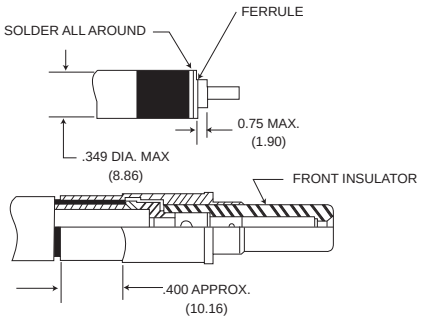

For Codes AB, AD, AE, AF and AG

Setp 1 - Trim cable as shown.
Step 2 - Flare out ends of braid to permit entry of ferrule.
Step 3 - Complete termination per instructions as shown below.

a. Push ferrule under braid as far as it will go. Trim off braid extending beyond shoulder of ferrul, if necessary.
b. While holding ferrule in place pull crimp sleeve forward over braid until it is tight against shoulder on ferrule. Push firmly against face of ferrule to make sure it is up tight.
c. Trim dielectric to the .035 (0.89)/ .030 (0.76) dimension.
d. Carefully push inner conductor through rear insulator.
e. While holding rear insulator firmly against ferrule, trim conductor to .156 (3.96)/.146 (3.71) dimension.
f. Place contact over conductor and solder.
g. Place front insulator over contact and then push assembly into coaxial shell.
h. Place parts in jaw of crimp tool. Locate jaws at start of chamfer on crimp sleeve. Press Sleeve firmly into coaxial shell and crimp. Use Daniels crimp tool HX4-210.

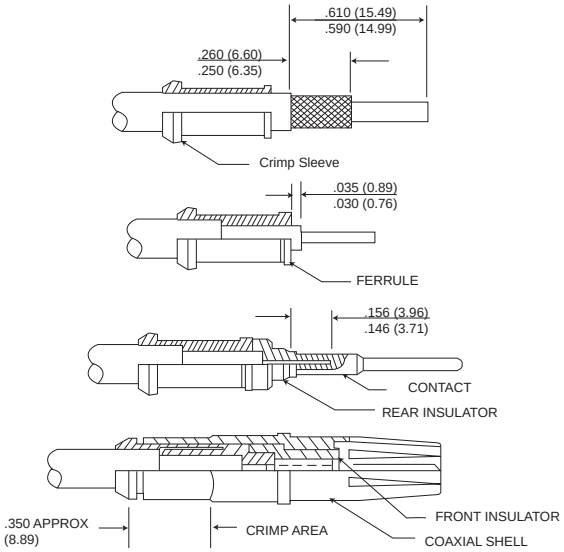

Cable Trim Dimensions

Code Letter	Inches			Millimeters		
	A	B	C	A	B	C
A	.420/.400	.432/.415	.330/.310	.10.67/10.16	11.05/10.54	8.38/7.87
B, C, D & P	.420/.400	.460/.440	.330/.310	10.67/10.16	11.68/11.18	8.38/7.87
E	.420/.400	.480/.460	.330/.310	10.67/10.16	12.19/11.68	8.38/7.87
F	.785/.745	.275/.255	.228/.208	19.94/18.92	6.98/6.48	5.79/5.28
G	.490/.470	.275/.255	.156/.136	12.45/11.94	6.98/6.48	3.96/3.45
H & R	.581/.561	.345/.325	.156/.136	14.76/14.25	8.76/8.26	3.96/3.45
J	.326/.306	.250/.230	.088/.068	8.28/7.77	6.35/5.84	2.24/1.73
K	.410/.390	.290/.270	.088/.068	10.41/9.91	7.37/6.86	2.24/1.73
L	.385/.365	.244/.224	.074/.064	9.78/9.27	6.20/5.69	1.88/1.63
S	.678/.658	.275/.255	.156/.136	17.22/16.71	6.98/6.48	3.96/3.45
U	.940/.920	.760/.740	.080/.060	23.88/23.37	19.30/18.80	2.03/1.52
V	.550/.540	.415/.405	.250/.240	13.97/13.72	10.54/10.29	6.35/6.10
T	.598/.578	.300/.280	.228/.208	15.19/14.68	7.62/7.11	5.79/5.28
AA, AC	See page 60 for dimensions					
AB, AD, AE, AF, AG	See page 60 for dimensions					

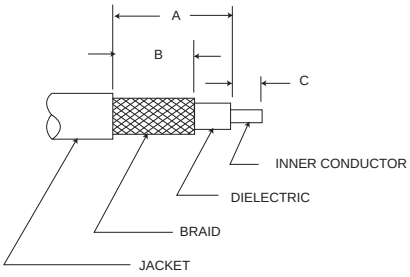

Modifications Codes

DPXA Modifications Codes

- 4. Mounting holes .120 (3.05) dia. c'sink 100˚ to .225 (5.72) dia.
- 5. 4-40 clinch nuts.
- 6. Removable insert retainer plate.
- 7. Mounting holes .120 (3.05) dia. c'sink 82˚ to .230 (5.84) dia.
-12. Mounting holes .132 (3.35)/.125 (3.18).
-16. A106 insert with separator.
-17. With grommet and mounting holes .120 (3.05) dia. countersunk 100˚ to .225 (5.72) dia.
-70. Standard mounting with (LIF) contacts.
-77. Same as -7 except with low insertion force (LIF) contacts (for LIF contact data).

DPXB and DPX2/3/4 Modification Codes

Some of the modification numbers used in the DPX lines apply to all types and some are applicable for only certain types. The following chart gives the modification number, the description, and the shell type in which they may be used (-33 is for plug shells, -34 is for receptacle shells).

	Modification	Applicable Series		Definition
DESCRIBES STANDARD CONNECTOR HOUSING **MODIFICATION 00**	- 00**	DPX2-33 and 34 DPX2-33A DPX2-33F and 34F DPX2-33M and 34M		Standard construction, mounting holes .120 (3.05) dia. and with tabs for junction shells.
	- 00	DPX2-34A		Standard construction - six floating eyelets and tabs for junction shells,
	- 00	DPX2-33B DPXB-33 DPX3-33 DPX4-33	1	Standard construction, mounting holes .120 (3.05) dia. countersunk 82˚ to .230 (5.84) dia. - no tabs.
	- 00	DPX2-34B DPXB-34 DPX3-34 DPX4-34	1	Standard construction, mounting holes 120 (3.05) dia. - no tabs.
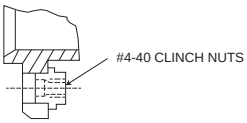 **MODIFICATION 01**	- 01	DPX2-33 and 34 DPX2-33A DPX2-34A DPX2-33F and 34F DPX2-33M-34M		Standard construction and with standard junction shells.
	- 01	DPX2-34B/33B DPXB-34		With four #4-40 clinch nuts in mounting holes.
	- 01	DPX3-34	1	With six #4-40 clinch nuts in mounting holes.
	- 01	DPX4-34	1	With ten #440 clinch nuts in mounting holes.
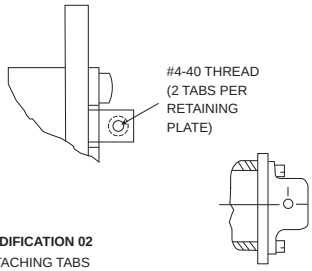 **MODIFICATION 02** ATTACHING TABS **ALTERNATE STYLE**	- 02	DPX2-33 and 34 DPX2-33A DPX2-34A DPX2-33F and 34F DPX2-33M and 34M		Standard construction and with 90˚ junction shells.
	- 02	DPX2-33B and 34B DPXB-33 and 34 DPX3-33 and 34 DPX4-33 and 34	1	Standard construction and with tabs for attaching junction shells.
	- 02	DPXBME-33 and 34 DPX2ME-33 and 34 DPX3ME-33 and 34 DPX4ME-33 and 34	2	Standard construction and with tabs for attaching junction shells.
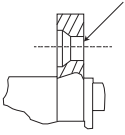 **MODIFICATION 03**	- 03	DPX2-33 and 34 DPX2-33A DPX2-33F and 34F DPX2-33M and 34M DPXB-33 and 34 DPX3-33 and 34 DPX4-33 and 34	1	Mounting holes .120 (3.05) dia. countersunk 100˚ to .230(5.84) dia.

1 Applicable for all MA, ME, NA & NE Series Connectors.
1 Applicable to NE Series also.

Modifications Codes

	Modfication	Applicable Series		Definition
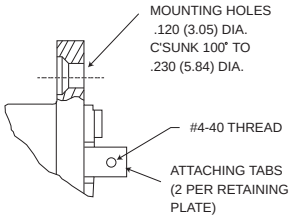 **MODIFICATION 04**	- 04** 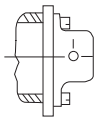 **ALTERNATE STYLE**	DPX2-33B DPXB-33 DPX3-33 DPX4-33	1	.120 (3.05) dia. mounting notes countersunk 100° to .230 (5.84) dia. and tabs for attaching junction shells.
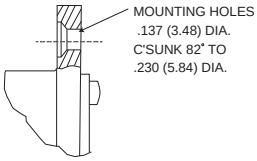 **MODIFICATION 08**	- 08	DPX2-33 and 34 DPX2-33F and 34F		Mounting holes .137 (3.48) dia. countersunk 82° to .230 (5.84) dia.
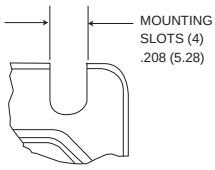 **MODIFICATION 12**	- 12	DPX2-34B DPXB-34		With mounting slots .208 (5.28) wide.
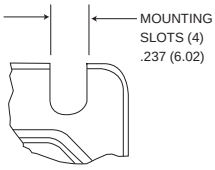 **MODIFICATION 13**	- 13	DPX2-34B DPXB-34		With mounting slots .237 (6.02) wide.
(SEE PAGE 62 FOR JUNCTION SHELL CONFIGURATIONS	- 14	DPX2-33B DPXB-33 DPX2-34B DPXB-34 DPX3-33 DPX3-34	1	With straight junction shelf. (Not available on DPX4)
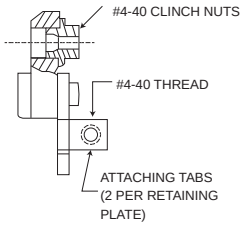 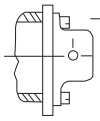 **MODIFICATION 17** **ALTERNATE STYLE**	- 17	DPX2-33B DPXB-33 DPX2-34B DPXB-34	1	With four #4-40 clinch nuts in mounting holes and tabs for attaching junction shells.
	- 17	DPX3-34	1	With six #4-40 clinch nuts in mounting holes and tabs far attaching junction shells.
	- 17	DPX4-34	1	With ten #4-40 clinch nuts in mounting holes and tabs for attaching junction shells,
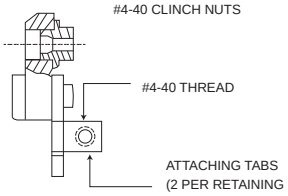 **MODIFICATION 18**	- 18 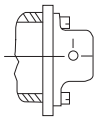 **ALTERNATE STYLE**	DPX2-33B DPXB-33 DPX2-34B DPXB-34 DPX3-34	1	With six #4-40 clinch nuts in mounting holes and tabs for attaching junction shells.

1 Applicable for all MA, ME, NA & NE Series Connectors.

Dimensions shown in inches (mm)
Specifications and dimensions subject to change

Modifications Codes

	Modfication	Applicable Series		Definition
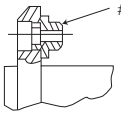 **MODIFICATION 19**	- 19**	DPX2-33B DPXB-33 DPX2-34B DPXB-34 DPX3-33 DPX3-34 (Same as Code -01)		With six #4-40 clinch nuts in mounting holes. Do not assign - use -01 code
MODIFICATION 20	- 20	DPX2-33A DPX2-34A		Standard construction without tabs on insert retaining plate.
SUPERSEDED BY 01 MOD. **MODIFICATION 22**	- 22	DPX2-33 and 34 DPX2-33A DPX2-33B DPXB-33 DPX2-33M and 34M DPX3-33 DPXBME, DPX2ME, DPX3ME, DPX4ME - 33 only DPX2-33F and 34F		With eight #4-40 clinch nuts in mounting holes. Same as 01. 01 Recommended
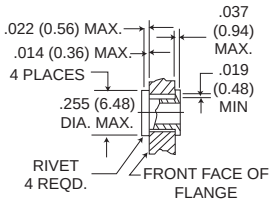 - 33 PLUG 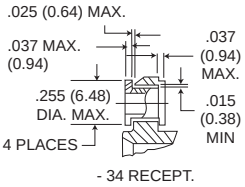 - 34 RECEPT. **MODIFICATION 23**	- 23	DPX2-33 and 34 DPX2-33A DPX2-33B DPXB-33 DPX2-34B DPXB-34 DPX3-33 and 34 DPX4-33 and 34 DPX2-33F and 34F	1	With floating eyelets.
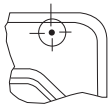 **MODIFICATION 25**	- 24	DPX2-34A DPX2-33B		With six mounting holes .208 (5.28) dia. (Foating eyelets omitted)
	- 25	DPX2-34B DPXB-34	1	With four mounting holes .157 (3.99)/.155 (3.94) dia. (Clinch nuts omitted)
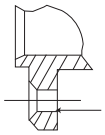 **MODIFICATION 26**	- 26	DPX2-34B DPXB-34 DPX3-34	1	Mounting holes .120 (3.05) dia. countersunk 82* to .230 (5.84) dia. and has tabs for attaching junction shells.
	- 29	DPX2-34A		With interfacial seal (if pins) without junction shell tabs and military gold plating on the contact.
	- 29	DPXBME-34P & 33S DPX2ME-34P & 33S DPX3ME-34P & 33S DPX4ME-34P & 33S	1	Standard except less grommet* * On the A106S layout the grommet is replaced by the separator.
	- 30	DPXBME-34P DPX2ME-34P DPX3ME-34P DPX4ME-34P	2	Standard except less grommet and with tabs for attaching junction shells. (-34 pin only)
	- 31	DPXBME-34P DPX2ME-34P DPX3ME-34P DPX4ME-34P	2	Standard except less grommet and with floating bushings. (Slatted shells).
	- 33	DPXBME-34P DPX2ME-34P DPX3ME-34P DPX4ME-34P	2	Standard except less grommet and with clinch nuts in mounting holes.
	- 37	DPXBME-34P DPX2ME-34P DPX3ME-34P DPX4ME-34P	2	Standard less grommet and with clinch nuts in mounting holes and with tabs for attaching junction shells.

1 Applicable for all MA, ME, NA and NE Series Connectors. 2

**Indicates polarizing position. (See page 72)

Modifications Codes

	Modfication	Applicable Series	Definition
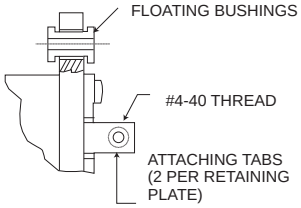	- 39** 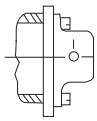	DPXB-33 & 34 DPX2-33B DPX2-34B DPX3-33 & 34 DPX4-33 & 34	With floating eylets & tabs for attaching junction shells. 1
MODIFICATION 39	ALTERNATE STYLE		
	The -7*** and 8*** Modification Codes are reserved for connectors which have Low Insertion Force (LIF) Contacts. The LIF design is not applicable to thermocouple contacts, coaxial contacts and contacts larger than size 8 and Standard size 20		
	- 70**	All DPX series with LITTLE CAESAR retention	Same as -00 with addition of LIF contacts See Contact Section Page 54
	- 71	All DPX series with LITTLE CAESAR retention	Same as -31 with addition of LIF contacts See Contact Section Page 54
	- 72	All DPX series with LITTLE CAESAR retention	Same as -01 with addition of LIF contacts See Contact Section Page 54
	- 73	All DPX series with LITTLE CAESAR retention	Same as -23 with addition of LIF contacts See Contact Section Page 54
	- 74	All DPX series with LITTLE CAESAR retention	Same as -33 with addition of LIF contacts See Contact Section Page 54
	- 75	All DPX series with LITTLE CAESAR retention	Same as -02 with addition of LIF contacts See Contact Section Page 54
	- 76	All DPX as listed for code -22	Same as -22 with addition of LIF contacts
	- 77	All DPXB series	Mounting holes .120 (3.05) dia. countersunk 82˚ to .230 (5.84) dia. and has LIF contacts.
	- 78		
	- 79	All DPX series with LITTLE CAESAR retention	Same as -29 with addition of LIF contacts

1 Applicable for all MA, ME, NA and NE Series Connectors. 2 Applicable for NE Series Also.

**Indicates polarizing position. (See page 72)

Polarization

Two Post Type

Face View of Engaging End

DPX2-33F or 33M

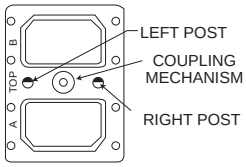

DPX2-34F or 34M

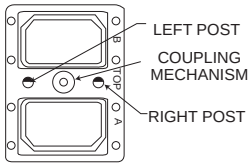

Three Post Type

DPXB-33

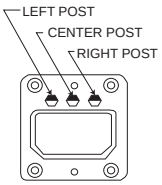

DPXB-34

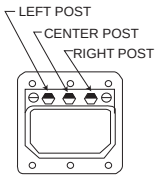

DPX2-33A or 33B

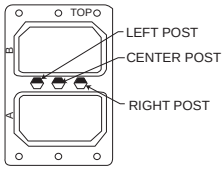

DPX2-34A or 34B

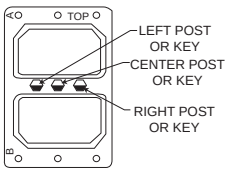

DPX3-33

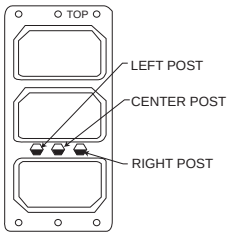

DPX4-33

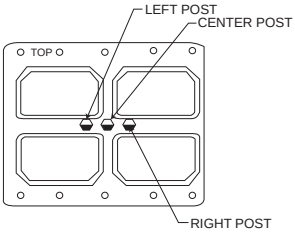

Dimensions shown in inches (mm)
Specifications and dimensions subject to change

Polarization

Positions

Dark areas represent post

Two Post Type

DPX2 33 PLUG MALE SHELL ONLY						DPX2 34 RECEPTACLE FEMALE SHELL ONLY					
Position	Left Post	Right Post	Position	Left Post	Right Post	Position	Left Post	Right Post	Position	Left Post	Right Post
01	4	4	09	3	3	01	1	1	09	2	2
02	5	4	10	4	2	02	1	6	10	3	1
03	6	4	11	2	2	03	1	5	11	3	3
04	2	4	12	3	2	04	1	3	12	3	2
05	3	4	13	2	1	05	1	2	13	4	3
06	4	3	14	3	1	06	2	1	14	4	2
07	5	3	15	2	6	07	2	6	15	5	3
08	2	3				08	2	3			

Three Post Type DPXB, DPX2 33B, DPX2 34B, DPX3 and DPX4

PLUG SHELL								RECEPTACLE SHELL							
Position	Left Post	Center Post	Right Post	Position	Left Post	Center Post	Right Post	Position	Left Post	Center Post	Right Post	Position	Left Post	Center Post	Right Post
01	1	1	1	51	3	2	5	01	4	4	4	51	6	3	2
02	2	1	1	52	4	2	5	02	4	4	3	52	6	3	1
03	3	1	1	53	5	2	5	03	4	4	2	53	6	3	6
04	4	1	1	54	6	2	5	04	4	4	1	54	6	3	5
05	5	1	1	55	1	2	4	05	4	4	6	55	1	3	4
06	6	1	1	56	2	2	4	06	4	4	5	56	1	3	3
07	1	1	6	57	3	2	4	07	5	4	4	57	1	3	2
08	2	1	6	58	4	2	4	08	5	4	3	58	1	3	1
09	3	1	6	59	5	2	4	09	5	4	2	59	1	3	6
10	4	1	6	60	6	2	4	10	5	4	1	60	1	3	5
11	5	1	6	61	1	2	3	11	5	4	6	61	2	3	4
12	6	1	6	62	2	2	3	12	5	4	5	62	2	3	3
13	1	1	5	63	3	2	3	13	6	4	4	63	2	3	2
14	2	1	5	64	4	2	3	14	6	4	3	64	2	3	1
15	3	1	5	65	5	2	3	15	6	4	2	65	2	3	6
16	4	1	5	66	6	2	3	16	6	4	1	66	2	3	5
17	5	1	5	67	1	2	2	17	6	4	6	67	3	3	4
18	6	1	5	68	2	2	2	18	6	4	5	68	3	3	3
19	1	1	4	69	3	2	2	19	1	4	4	69	3	3	2
20	2	1	4	70	4	2	2	20	1	4	3	70	3	3	1
21	3	1	4	71	5	2	2	21	1	4	2	71	3	3	6
22	4	1	4	72	6	2	2	22	1	4	1	72	3	3	5
23	5	1	4	73	1	3	1	23	1	4	6	73	4	2	4
24	6	1	4	74	2	3	1	24	1	4	5	74	4	2	3
25	1	1	3	75	3	3	1	25	2	4	4	75	4	2	2
26	2	1	3	76	4	3	1	26	2	4	3	76	4	2	1
27	3	1	3	77	5	3	1	27	2	4	2	77	4	2	6
28	4	1	3	78	6	3	1	28	2	4	1	78	4	2	5
29	5	1	3	79	1	3	6	29	2	4	6	79	5	2	4
30	6	1	3	80	2	3	6	30	2	4	5	80	5	2	3
31	1	1	2	81	3	3	6	31	3	4	4	81	5	2	2
32	2	1	2	82	4	3	6	32	3	4	3	82	5	2	1
33	3	1	2	83	5	3	6	33	3	4	2	83	5	2	6
34	4	1	2	84	6	3	6	34	3	4	1	84	5	2	5
35	5	1	2	85	1	3	5	35	3	4	6	85	6	2	4
36	6	1	2	86	2	3	5	36	3	4	5	86	6	2	3
37	1	2	1	87	3	3	5	37	4	3	4	87	6	2	2
38	2	2	1	88	4	3	5	38	4	3	3	88	6	2	1
39	3	2	1	89	5	3	5	39	4	3	2	89	6	2	6
40	4	2	1	90	6	3	5	40	4	3	1	90	6	2	5
41	5	2	1	91	1	3	4	41	4	3	6	91	1	2	4
42	6	2	1	92	2	3	4	42	4	3	5	92	1	2	3
43	1	2	6	93	3	3	4	43	5	3	4	93	1	2	2
44	2	2	6	94	4	3	4	44	5	3	3	94	1	2	1
45	3	2	6	95	5	3	4	45	5	3	2	95	1	2	6
46	4	2	6	96	6	3	4	46	5	3	1	96	1	2	5
47	5	2	6	97	1	3	3	47	5	3	6	97	2	2	4
48	6	2	6	98	2	3	3	48	5	3	5	98	2	2	3
49	1	2	5	99	3	3	3	49	6	3	4	99	2	2	2
50	2	2	5					50	6	3	3				

The last two digits in the DPX nomenclature (ex: DPXB-8-33B-0014) refer to the polarizing post position. When the last two digits are omitted it means the polarizing posts will not be assembled and position number is not stamped on the connector. This allows the customer to position the posts themselves and then stamp the appropriate number on the shell. If the last two digits are made 00 it means the polarizing posts are deleted.

Panel Cutouts

DPXA

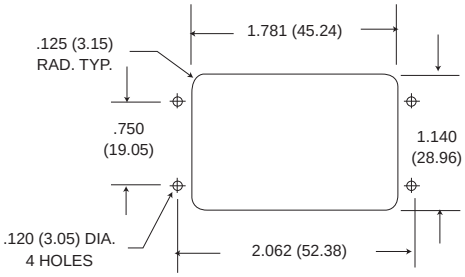

NOTE - WHEN USING THE -2301 FLOATING EYELET MODIFICATION, ADD .050 (1.27) TO THE CUTOUT SIZE TO ALLOW FOR FLOAT (EXCEPTION -34A)

DPXB

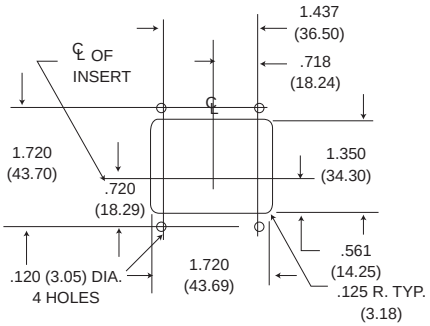

- 33 Front Mount

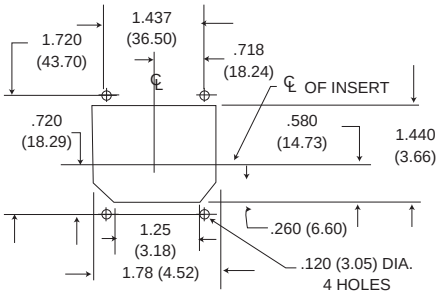

- 33 Rear Mount
- 34 Rear Mount
- 34 Front Mount

Panel Cutouts

DPX2

All tolerances are ± .015 (0.38) unless otherwise noted.

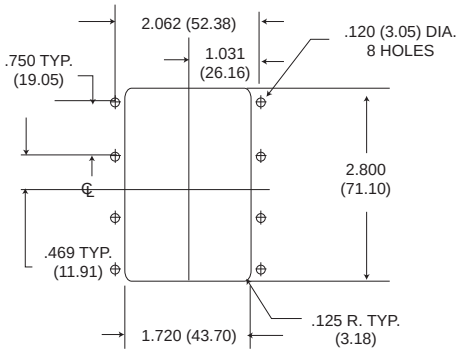

- 33 FRONT MOUNT

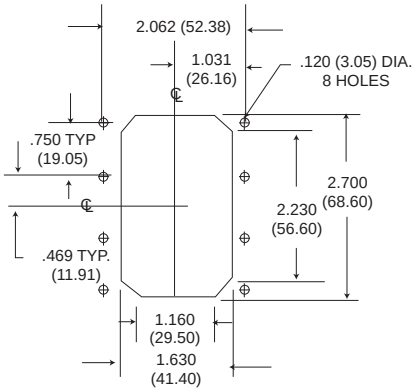

- 33 REAR MOUNT

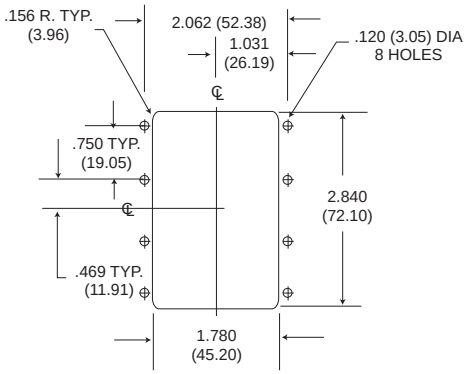

- 34 FRONT OR REAR MOUNT

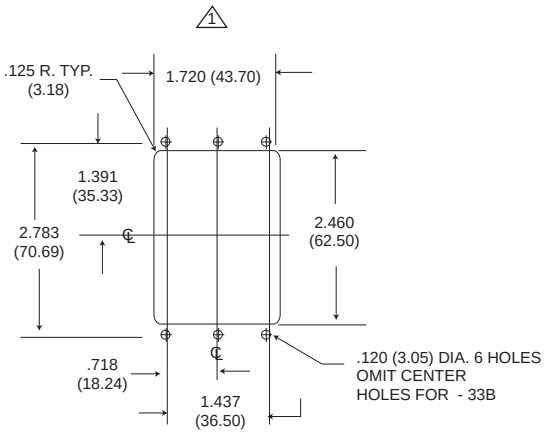

- 33A & -33B FRONT MOUNT

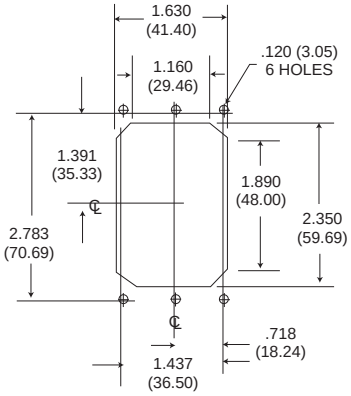

- 33A REAR MOUNG

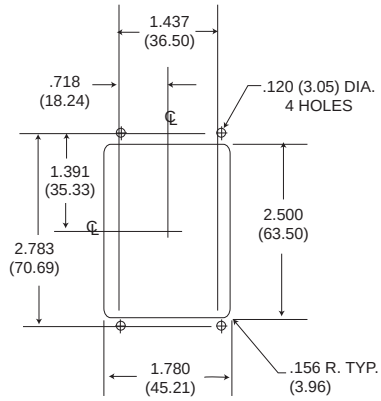

- 34B FRONT MOUNT

1 For - 23 float mtg. mod. 1.78 (45.21).

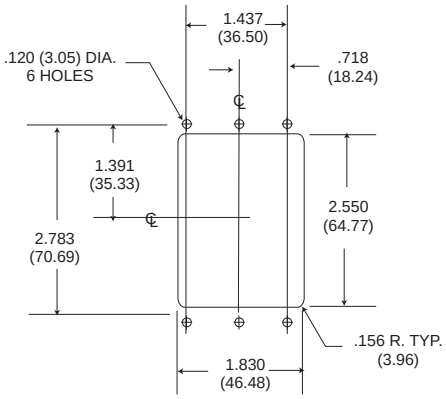

- 34A REAR MOUNT
(-34A FRONT MOUNT CONSULT FACTORY)

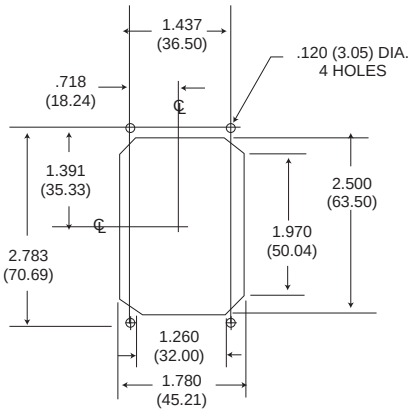

- 33B REAR MOUNT
- 33B REAR MOUNT

Panel Cutouts

DPX3

All tolerances are ± .015 (0.38) unless otherwise noted.

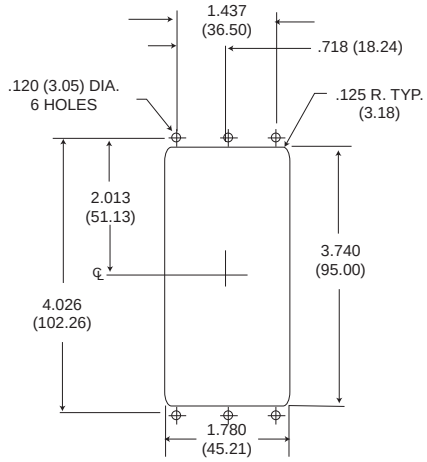

FRONT MOUNT

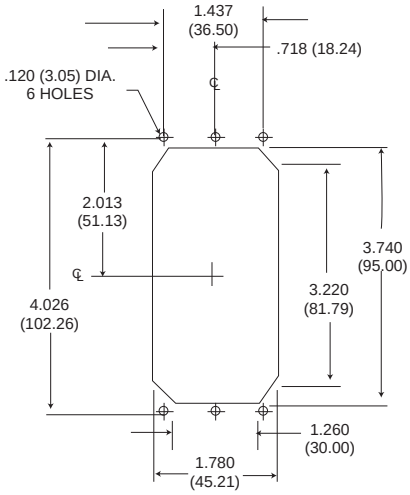

REAR MOUNT

DPX4

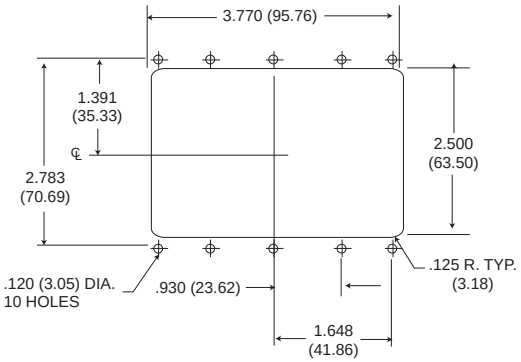

FRONT MOUNT

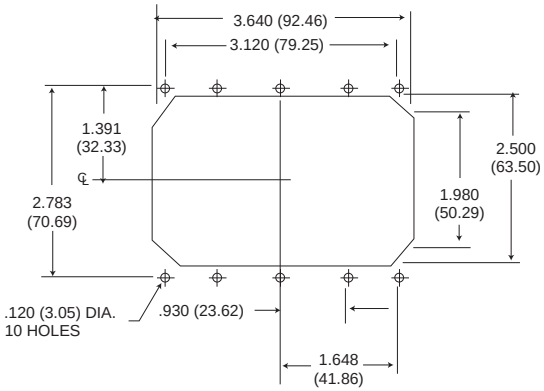

REAR MOUNT

Dimensions shown in inches (mm)
Specifications and dimensions subject to change

Sealing Plugs - DPX*ME (for environmental requirements)

Material: Teflon
(All others thermoplastic)

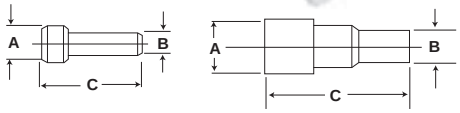

Part Number	Contact Size	Color	A	B	C
225-1013-000	22	Black	.063 (1.6)	.040 (1.0)	.469 (11.9)
225-0070-000	20	Red	.085 (2.2)	.053 (1.3)	.805 / .755 (20.5 / 19.2)
225-0071-000	16	Blue	.115 (2.9)	.074 (1.88)	1.472 / 1.422 (37.4 / 36.1)
225-0072-000	12	Yellow	.171 (4.3)	.120 (3.0)	1.441 / 1.391 (36.6 / 35.5)
225-0090-000	#5 and #9 Coax	White	.365 (9.3)	.287 (7.3)	.835 (21.2)

Filler Plugs - DPX*

Material: Teflon
(All others thermoplastic)

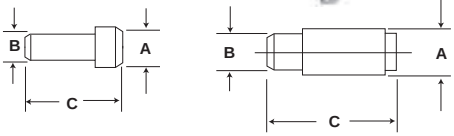

Part Number	Contact Size	Color	A	B	C
225-0094-000	22	Black	.069 (1.7)	.051 (1.3)	.420 (10.7)
225-0095-000	20	Red	.083 (2.1)	.069 (1.7)	.350 (8.9)
225-0096-000	16	Blue	.131 (3.3)	.108 (2.7)	.320 (8.1)
225-0097-000	12	Yellow	.187 (4.7)	.156 (4.0)	.320 (8.1)
225-0098-000	#5 Coax (Pin)	White	.275 (7.0)	.251 (6.4)	.450 (11.4)
225-0099-000	#5 and #9 Coax (Socket)	White	.275 (7.0)	.251 (6.4)	1.061 (26.9)

Junction Shells

90˚ Angle

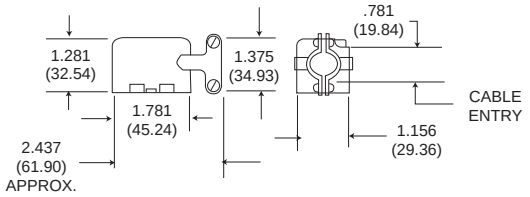

Style	Part Number
(Right) DPXA	20745-22
(Left) DPXA	20745-23
(Right) DPX2	20745-10
(Left) DPX2	20745-11

90˚ ANGLE DPX2
JUNCTION SHELL (SIDE OUTLET)

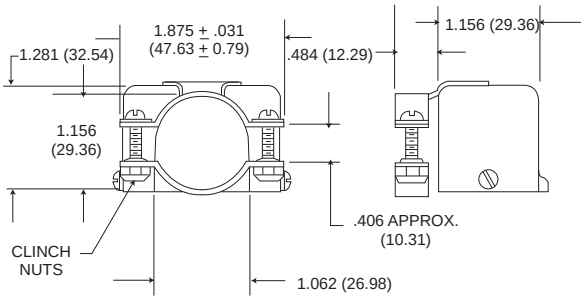

Style	Part Number
DPX2	20745-12

STRAIGHT JUNCTION SHELL

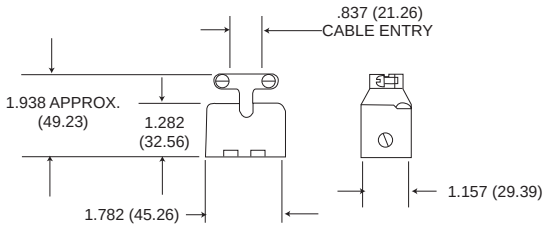

Style	Part Number
DPXA	20745-21
DPX2	20745-8

* DPX2 Junction Shells are also used on DPXB connectors.

(DPXA ONLY)
DIECAST STRAIGHT JUNCTION SHELL

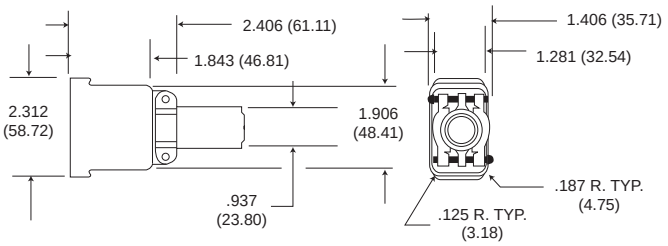

Style	Part Number
DPXA	22017

(DPXA ONLY)
DIECAST STRAIGHT JUNCTION SHELL

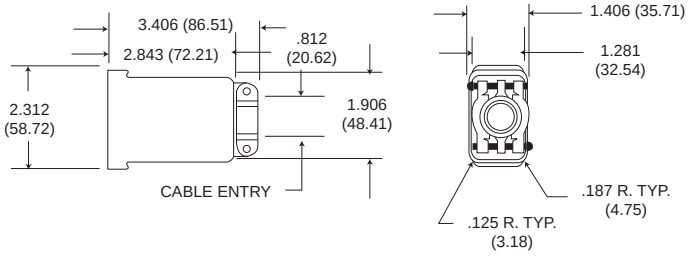

Style	Part Number
DPXA	22017-2

(DPXA ONLY)
DIECAST 90˚ ANGLE JUNCTION SHELL

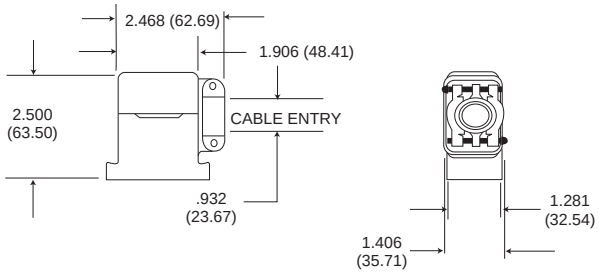

Style	Part Number
DPXA	22017-1

Diecast junction shells may be used on DPXA connectors. They have 4-40 NC-2B tapped mounting holes for attaching to the shell mounting hardware.

Dust Caps

Conductive (black)

DPXB-60-1 for 34 Shell
Conductive Dust Caps
025-0767-001
Protect Against
Static Electricity

34

Conductive (black)

DPXA-59-1 for 33 Shells
025-0749-001

33

Dimensions shown in inches (mm)
Specifications and dimensions subject to change

Coaxial Cable Reference Guide

For BKA* DPX Series (Crimp, & Solder)
Refernece MIL-C-17D & DPX NE/NA MIL-C-81659 Series

RG/U Type	Inner Conductor	Dielectric Material	DOD (Inch)	Jacket Material	O.D (Inch)	Weight (lbs/ft)	Max Oper. Temp, Range (C)	Max Oper. Voltage (Volts RMS)	Suggested Alt Cable	Code Crimp Type Coax	Code Solder Type Coax	DPX NE/NA Military	BKA* ARINC Type Coax
7	0.0359 "	Air-space PE	0.250	PVC	0.370	0.080	-40 + 80	1,000	Use RG63B	—	I	—	—
9	0.0855"	PE	0.280	PVC	0.420	0.140	-40 + 80	4,000	Use RG214	—	R,AC	—	Size 1(71W1)
55	0.0320 "	PE	0.116	PE	0.206 Max.	0.032	-55 + 80	1,900	Use RG55B	S	C, J	—	Size 1(71W1)
58	0.0320"BC	PE	0.116	PVC	0.195	0.029	-40 + 80	1,900	Use RG58B	D,P,G JAC,AD	C, J, Z AB	Size 5/9 Seal 1	Size 1(71W1) Size 5
59	0.0253 "	PE	0.146	PVC	0.242	0.032	-40 + 80	2,300	Use RG59B	A,F,T	D	—	—
59B	0.0230"	PE	0.146	PVC	0.242	0.032	-40 + 80	2,300	Use up to 1000 MHz	—	—	—	—
62	0.0253"	Air-space PE	0.146	PVC	0,242	0.038	-40 + 80	750	Use RG62A	A,F,T	E	—	—
62A	0.0253"	Air-space PE	0.146	PVC	0.242	0.038	-40 + 80	750	—	—	—	—	—
71	0.0253"	Air-space PE	0.146	PVC	0.250 Max.	0.046	-40 + 80	750	Use RG71B	—	E	—	—
115	0.0840"	PTFE	0.250	FG Braid	0.375	0.148	-55 + 250	5,000	Use RG115A	V	—	—	Size 1(71W1)
142	0.0359"	PTFE	0.116	FG Braid	0.206 Max.	0.047	-55 + 250	1,900	Use RG142A	S,AE	—	Size 5/9 Seal 1	Size 1(71W1) Size 1(71W1A)
142B	0.0390"	PTFE	0.116	FEP	0.195	0.050	-55 + 200	1,900	—	—	—		Size 1(71W1A) Size 5
174	0.0189"	PE	0.060	PVC	0.100	0.008	-40 + 80	1,500	—	D,H,U, AF	—	Size 5/9 Seal 2	Size 5 Size 12
178	0.0120"	PTFE	0.036	KEL-F	0.079 Max.	0.0054	-40 + 150	1,000	Use RG178B	ER,K,AG, L,M,AF	—	Size 5/9 Seal 1	Size 5
179	0.0120 "	PTFE	0,057	KEL-F	0.094 Max.	0.010	-55 + 150	1,200	Use RG1798	D,H,U, AF	—	Size 5/9 Seal 1 Seal 2	Size 5
179B	0.0120"	PTFE	0.063	FEP	0.100	0.010	-55 + 200	1,200					Size 5
180	0.0120"	PTFE	0.103	KEL-F	0.141 Max.	0.019	-40 + 150	1,500	Use RG180B	CAB	B	Size 5/9 Seal 1	Size 5
180B	0.0120"	PTFE	0.102	FEP	0.145 Max.	0.019	-55 + 200	1,500		AB			Size 5
187	0.0120"	PTFE	0.060	PTFE	0.110 Max .	0.010	-55 + 250	1,200	Use RG179B	D,H,U, AF	A,K	—	Size 5
188	0.0201"	PTFE	0.060	PTFE	0.110 Max.	0.011	-55 + 250	1,200	Use RG316	D,A,U AF	A,K	—	—
195	0.0120"	PTFE	0.102	PTFE	0.155 Max.	0.020	-55 + 250	1,500	Use RG180B	CAB	B	—	Size 5
196	0.0120'	PTFE	0.034	PTFE	0.080 Max.	0.006	-55 + 250	1,000	Use RG178B	E,R,K. L,AA,AG	AA	Size 5/9 Seal 1	Size 5
214	0.0888"	PE	0.285	PVC	0.425	0.126	-40 + 80	5,000	—	—	R,AC	—	Size 1(71W1) Size 1(71W1A)
223	0.035 "	pE	0.116	PVC	0.216 Max.	0.034	-40 + 80	1,900	—	—	C,J	—	—
225	0.0936"	PTFE	0.285	FG Braid	0.430	0.180	-55 + 250	5,000	—	—	—	Size 5/9 Seal 2	Size 1(71W1)
316	0.0201	PTFE	0.060	FEP	0.102	0.012	-55 + 200	1,200	Use RG188A	—	—	Size 5/9 Seal 2	—
393	0.0936"	PTFE	0.285	FEP	0.390	0.165	-55 + 200	5,000	Use RG225	—	—	—	Size 1(71W1A)
400	0.0385"	PTFE	0.116	FEP	0.195	0,050	-55 + 200	1,900		—	—	—	Size 1(71W1)
402	0.0360"	PTFE	0.119	None	0.141	0.032	-55 + 200	2.500	Use RG142B	—	—	—	Size 1(71W1) Size 1(71W1A)

NOTE: This table is shown for reference only. ITT Cannon recommends that the above information be used as a guideline and may be subject to variation between various cable manufacturers. For specific information concerning the actual physical characteristics of a specific cable, contact the manufacturer.

Mouser Electronics

Authorized Distributor

Click to View Pricing, Inventory, Delivery & Lifecycle Information:

ITT Cannon:

031-9206-004 DPX2RMA-A106P-A106P-34B-00-01