PART NAME	NEMA HEAVY DUTY PLASTIC BOX	PART No.	HD-7600	REVISION DATE	10-4-10

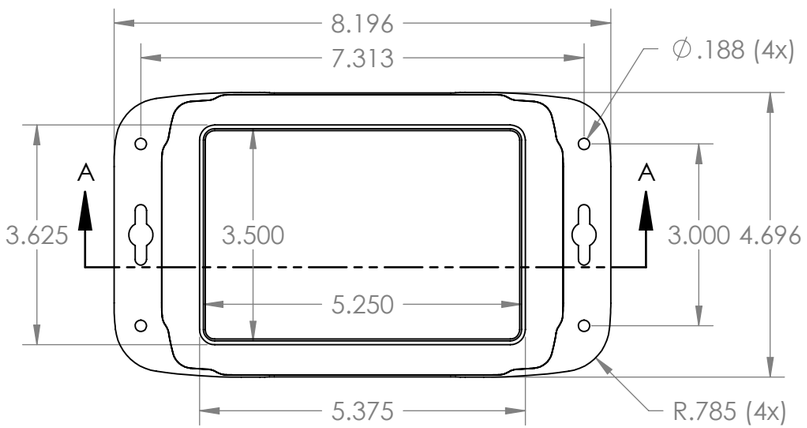

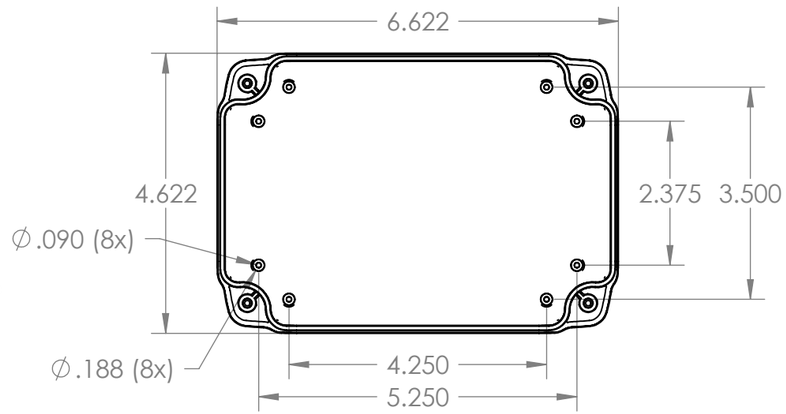

INSIDE VIEW OF COVER

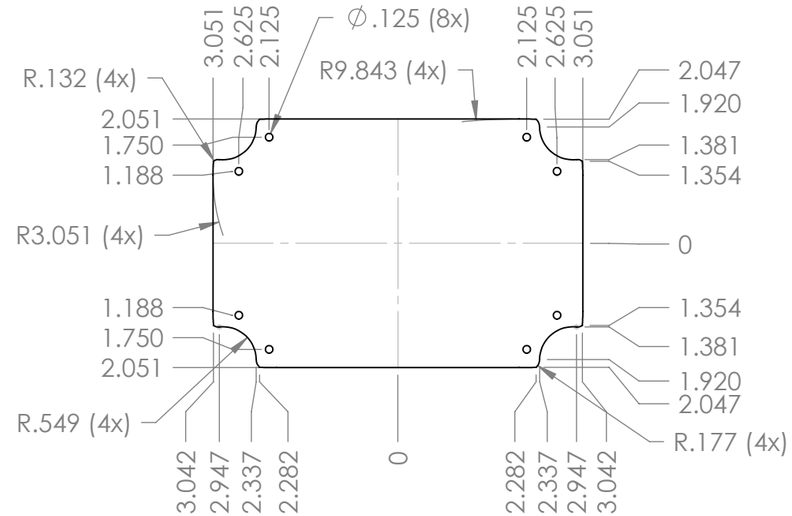

REFERENCE MAXIMUM P.C.B. SIZE.
SIZES INCLUDE .03 CLEARANCE FROM INNER WALLS AND SCREW TOWERS WHEN UTILIZING THE MOUNTING BOSSES IN THE COVER. (CUSTOMER TO PROVIDE)

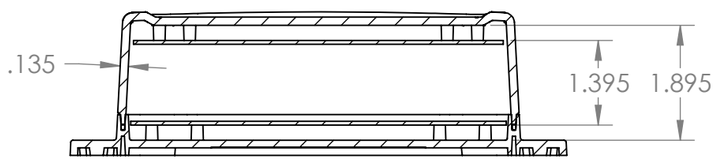

SECTION A-A

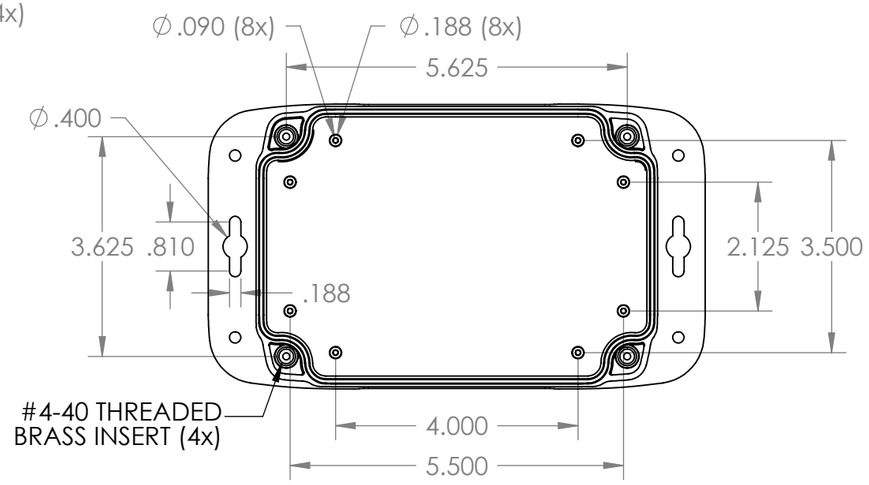

INSIDE VIEW OF BASE

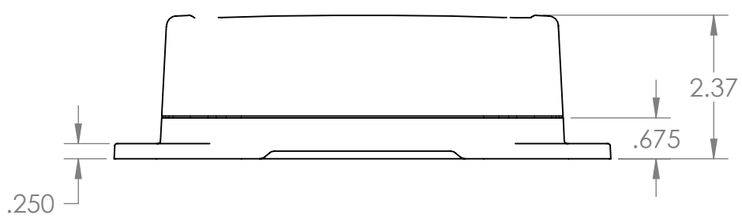

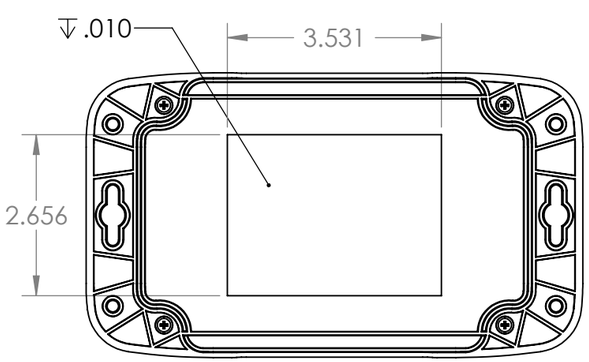

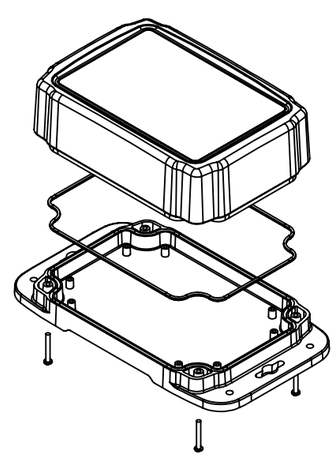

ALL DIMENSIONS HAVE ±.015 TOLERANCE

MATERIAL: BASE & COVER - POLYCARBONATE
UL94-V0 AND UV STABILIZED
FINISH: TEXTURED BLACK
GASKET SILICONE RUBBER

ENCLOSURE DESIGNED TO IP 66 OF IEC 529
AND NEMA 4, 4X, 12, 13
FOUR (4) #4-40 x 7/8 LG. PAN HEAD STAINLESS
STEEL SCREWS SUPPLIED FOR ASSEMBLY OF COVER
RECOMMENDED TORQUE SETTING FOR ASSEMBLY
SCREWS : 6.25 IN-LBS.
PCB BOSSES WILL ACCEPT A #4 x 1/4 LG. THREAD
FORMING SCREW (NOT SUPPLIED)

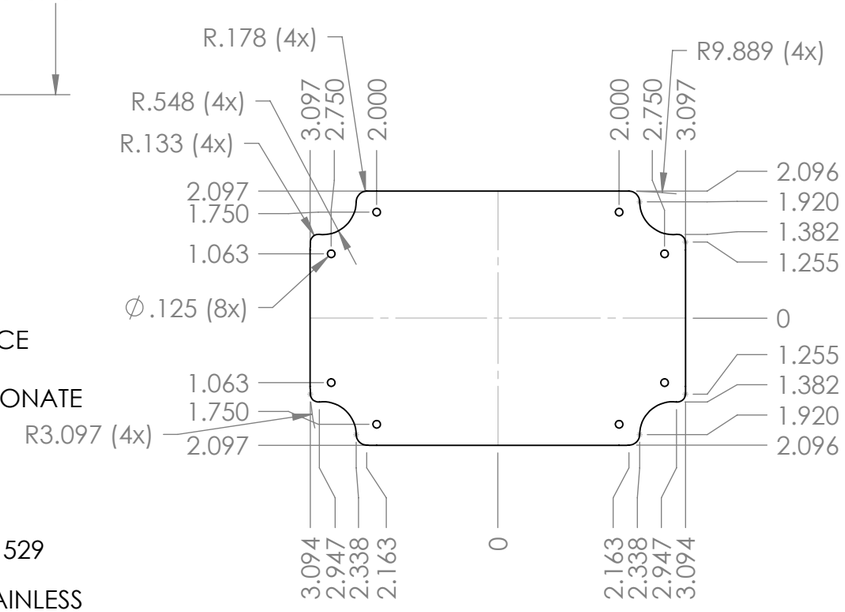

REFERENCE MAXIMUM P.C.B. SIZE.
SIZES INCLUDE .03 CLEARANCE FROM INNER WALLS AND SCREW TOWERS WHEN UTILIZING THE MOUNTING BOSSES IN THE BASE. (CUSTOMER TO PROVIDE)

Mouser Electronics

Authorized Distributor

Click to View Pricing, Inventory, Delivery & Lifecycle Information:

Bud Industries:

HD-7600