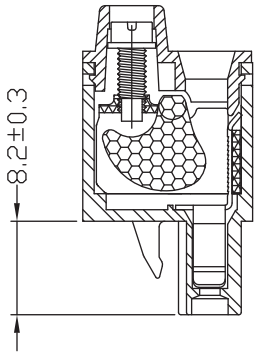

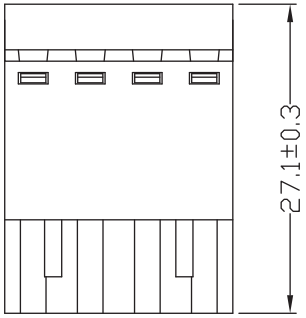

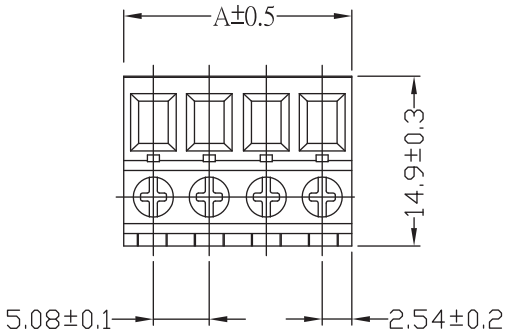

Pitch : 5.08 mm(0.200 inch)					
Poles	A(mm)	A(inch)	Poles	A(mm)	A(inch)
2	10.16	0.400	15	76.20	3.000
3	15.24	0.600	16	81.28	3.200
4	20.32	0.800	17	86.36	3.400
5	25.40	1.000	18	91.44	3.600
6	30.48	1.200	19	96.52	3.800
7	35.56	1.400	20	101.60	4.000
8	40.64	1.600	21	106.68	4.200
9	45.72	1.800	22	111.76	4.400
10	50.80	2.000	23	116.84	4.600
11	55.88	2.200	24	121.92	4.800
12	60.96	2.400			
13	66.04	2.600			
14	71.12	2.800			

TECHNICAL CHARACTERISTICS

MATERIAL
INSULATOR: PA 66
FLAMMABILITY RATING: UL94-V0
COLOR: GREEN
METAL HOUSING: STEEL ZINC PLATED
TERMINAL SCREW: STEEL ZINC PLATING
TERMINAL SCREW SLOT TYPE: "+"
WIRE GUARD: STEEL ZINC PLATING

ENVIRONMENTAL
OPERATING TEMPERATURE: -40 UP TO 105°C
COMPLIANCE: LEAD FREE AND ROHS

ELECTRICAL	cULus	VDE
CURRENT RATING:	16 A	16 A
WORKING VOLTAGE:	300 VAC	250 VAC
WITHSTANDING VOLTAGE:	2 KV	2 KV
CONTACT RESISTANCE:	20 mOhm max	

STANDARD
cULus CERTIFIED E315414
VDE CERTIFIED 40038804

MECHANICAL
SOLID WIRE: 24-12 AWG / 0.205-3.31 MM²
STRANDED WIRE: 24-12 AWG / 0.205-3.31 MM²
TORQUE: 4.5 Lb-In / 0.45 Nm

WIRE STRIPE LENGTH: 10 MM
PITCH: 5.08 MM

PACKAGING
BOX

RoHS Compliant

REV	DATE	FILE	BY
G			
F			
E			
D			
C	17-AUG-15	VDE	AK
B	02-JUN-14	VDE+REF CERTIF	AS
A	20-JUN-12	PDF	GG

PROJECTION:

APPROVAL: FBr

GENERAL TOLERANCE
.X = +/- 0.2
.XX = +/- 0.15

UNIT: MM
SCALE:
SHEET: 1/2
DRAW: MARVIN

WÜRTH ELEKTRONIK

DESCRIPTION: SERIE 373B - 5.08 mm Vertical Cable Entry with Stamping Clamp

WERI PART NO: 691 373 500 0xx B

SIZE **A4**

Cautions and Warnings:

This electronic component is designed and developed with the intention for use in general electronics equipments.
Before incorporating the components into any equipments in the field such as aerospace, aviation, nuclear control, submarine, transportation, (automotive control, train control, ship control), transportation signal, disaster prevention, medical, public information network etc. where higher safety and reliability are especially required or if there is possibility of direct damage or injury to human body, Wurth Elektronik must be asked for a written approval.
In addition, even electronic component in general electronic equipments, when used in electrical circuits that require high safety, reliability functions or performance, the sufficient reliability evaluation-check for the safety must be performed before by the user before usage.

RoHS Compliant

REV	DATE	FILE	BY
G			
F			
E			
D			
C			
B			
A	10-SEP-14	PDF	QL

PROJECTION:

APPROVAL: JC

GENERAL TOLERANCE

UNIT: MM

SCALE:

SHEET: 2/2

DRAW: QL

WÜRTH ELEKTRONIK

DESCRIPTION: DISCLAIMER

WERI PART NO: DISCLAIMER

SIZE

A4

Mouser Electronics

Authorized Distributor

Click to View Pricing, Inventory, Delivery & Lifecycle Information:

Wurth Elektronik:
691373500002B