Interconnect Solutions Worldwide

# 38999 STYLE CIRCULAR BACKSHELLS

NCAGE Code U5792 www.polamco.com

Polamco

# From 1976 beginnings to the present day.

Polamco was founded in 1976 by David Polson as a high precision manufacturing engineering company.

As a qualified design engineer, David saw the opportunity to create a company that could design and manufacture its own products. He saw the interconnection market as the way forward for Polamco, where it could offer innovative design, competitive pricing and quality products, underpinned with excellent customer service.

Today Polamco is a world renowned backshell and connector manufacturer dedicated to servicing customers through design, quality, service and reliability. A flexible workforce, 24-hour working and the latest machine tools ensures that Polamco makes continued customer requirements a reality.

Investment in state-of-the-art machine tools is essential to Polamco's business success, with CNC machines, the majority of which are under five years old.

The company invests in its own people through its in-house training courses, continuous improvement and open and honest communication between the senior management and shop floor personnel.

It's the people at Polamco that make our success possible. We provide an equal opportunity workplace and create an environment where employees share a sense of ownership. We are dedicated towards pursuing business interests worldwide in a socially and environmentally responsible manner and in accordance with high standards of legal and ethical conduct.

**Managing Director**

*"The success of the company has been the ability to react to customers' requirements in an efficient manner, turning an enquiry into a design concept and, in a matter of hours, a competitively priced product."*

**David Polson, Chairman**

# From high above the earth, to deep below the sea. From static to high speed requirements, Polamco products are proven worldwide in varied and demanding environments.

Polamco design, manufacture and supply a wide range of interconnection products to markets worldwide. These include aerospace, defence, communications, automotive, industrial, medical, mass transit, shipbuilding, oil and space.

- Circular Backshells
- Rectangular Backshells
- Aerospace Backshells
- Pull Break Connectors
- Torque Differential Connectors - High Vibration
- Integral Backshell Connectors
- RJ45 and USB Connectors
- High Temperature Connectors
- Hermetic and Filtered Connectors
- Fibre Optic Connectors
- Tooling
- Heat Shrink Kits
- Protection Covers
- Blanking Cans
- Dummy Receptacles
- Conduit Systems
- Nomex Lacing Tape
- Heat Shrink Boots
- High Temperature Sleeving
- Cable Protection
- Adhesives
- Screenbraid

# From a range of ready-to-order items...

The Polamco product range is continually being updated with new designs and technical information can be found at www.polamco.com.

The flexible manufacturing system allows Polamco's distributor network to keep the popular ranges in stock on a Kanban system allowing next day delivery to meet customers' specific demands.

Our modern, highly computerised, machine shop manufactures components and assemblies of the highest quality for customers throughout the world.

Our continuous investment programme ensures the provision of a sophisticated and highly flexible 'design-to-delivery' manufacturing facility utilising state of the art CNC multi-axis lathes and machining centres.

## NCAGE Code U5792
## NATO Stock Numbers

assigned to over 2000 of our parts.

Contact sales@polamco.com for more information.

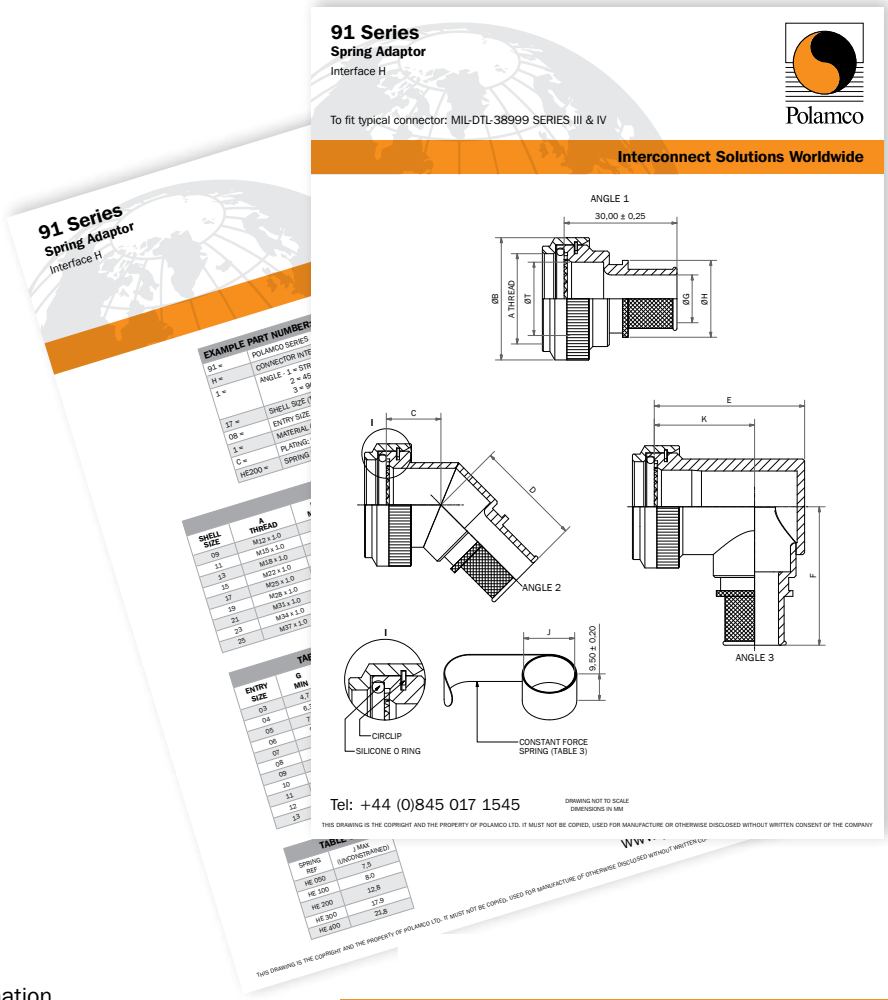

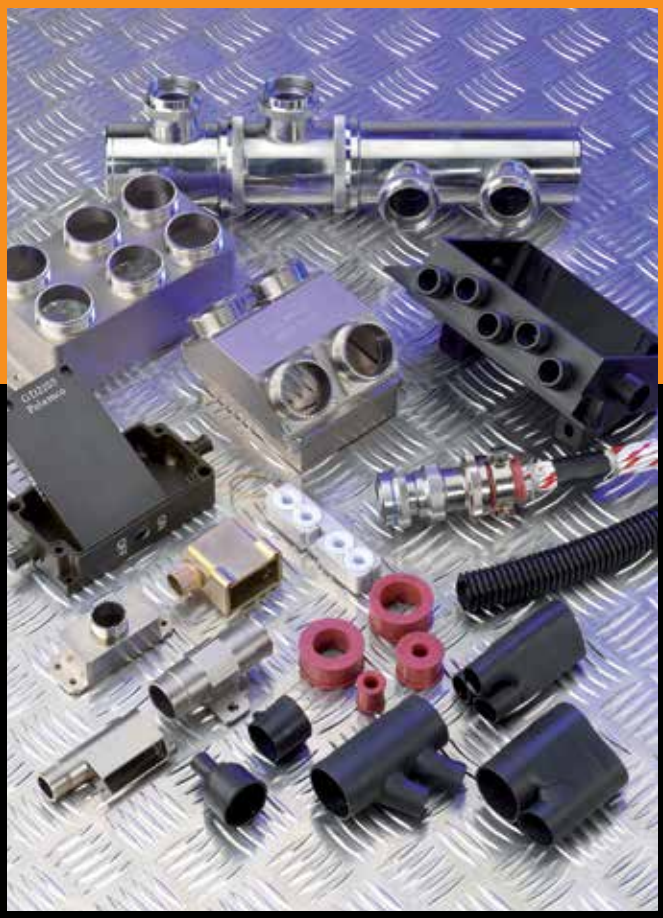

# ...to customised solutions.

Our keen awareness of our customers' changing needs has resulted in the creation of our dedicated in-house research and development engineering team. Using our CAD/CAM facilities, Polamco's design department can provide comprehensive interconnect solutions for the most demanding applications. Our experienced engineers are ready to produce 3D product development models and design drawings for customer review within hours of receiving the enquiry.

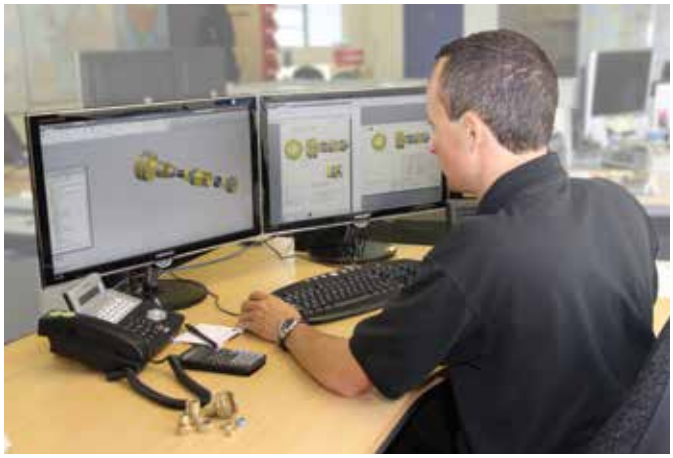

Certificate GB09/77517

SGS

Polamco Limited

Weston Lock, Lower Bristol Road,
Bath, BA2 1EP, UK

ISO 9001:2008
AS 9100 Revision C

Design, manufacture, stockholding and distribution of cable harness accessories (connector backshells for open, heatshrink, environmentally sealed, E.M.C., R.F.I. and conduit systems) circular and rectangular electrical connectors for use in the aerospace and defence industries, and sub-contract machining.

This certificate is valid from 28 May 2012 to 28 May 2015 and remains valid subject to satisfactory surveillance audits.
Re certification audit due before 22 May 2015
Issue 3. Certified since ISO 26 May 2009
Certified since ASCS 26 May 2009

ADS
aerospace sector certification scheme

UKAS MANAGEMENT SYSTEMS 005

# From AS9100 registration... to customer appreciation

Quality is at the heart of the Polamco corporate philosophy and the company holds an impressive array of customer specific and product approvals.

**AS9100-Rev C**
**ISO9001:2008**
**SC21 Bronze Award**
**VG95319-1011**

Polamco is registered to design, manufacture, stock and distribute cable harness accessories (connector backshells for open, heatshrink, environmentally sealed, EMC/RFI and conduit harnesses) and sub-contract machining, as well as circular and rectangular connectors for the aerospace and defence industries.

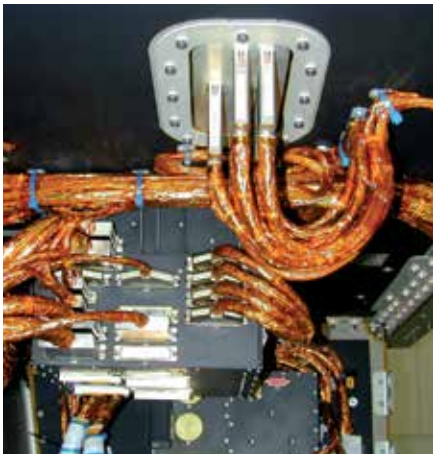

**Customer approvals include:**
BAE
General Dynamics
EADS Astrium
Northrop Grumman
Thales
Ultra
Rolls-Royce
Rockwell Collins
GKN Aerospace
Bombardier
Lockheed Martin
Cobham
UTC Aerospace Systems
General Atomics
SpaceX

*More than a supplier and manufacturer, Polamco has been central to the success of R&D programmes worldwide.*

# Product Information

Screened Backshell Product Finder ..... 8
Non-Screened Backshell Product Finder ..... 14
Part Numbering System ..... 16
Calculating Wire Bundle Diameter ..... 17
Material & Plating ..... 18
Standard Derivatives: Modification Codes ..... 20
Standard Derivatives: Style T2 & T3 Adaptors ..... 21
Connector Interface Table ..... 22
RoHS Statement ..... 27

PAGE 8

# Screened

**Screened Backshell Product Finder on page 8**

Band ..... 30
Spring ..... 106
Memory Ring ..... 126
Braid Trap ..... 144
Braid Tail ..... 156
Mesh Tape ..... 166
Cone ..... 186
TAK ..... 263

PAGE 29

# Non-Screened

**Non-Screened Backshell Product Finder on page 14**

Strain Relief ..... 1
Heat Shrink Boot ..... 25
Grommet Compression Nut ..... 45

PAGE 275



THIS DRAWING IS THE PROPERTY OF POLAMCO LTD AND MUST NOT BE USED FOR COMMERCIAL PURPOSES WITHOUT WRITTEN CONSENT OF THE COMPANY

# Catalogue Sections

Polamco

**Interconnect Solutions Worldwide**

## Conduit Backshells & Conduit


Conduit Backshells ..... 324
Non-Metallic Conduit ..... 330

PAGE 323

## Thread Adaptors & Extenders


Thread Adaptors ..... 1
Extenders ..... 11

PAGE 333

## Associated Products


Screen Termination Band ..... 2
Screenbraid ..... 3
Adhesives ..... 5
Heat Shrink Boots - Straight Shapes with Rib - VG Style ..... 7
Heat Shrink Boots - Right-Angle Shapes with Rib - VG Style ..... 8

PAGE 1

## Glossary & Index


Glossary & Terms ..... 356
Index ..... 359


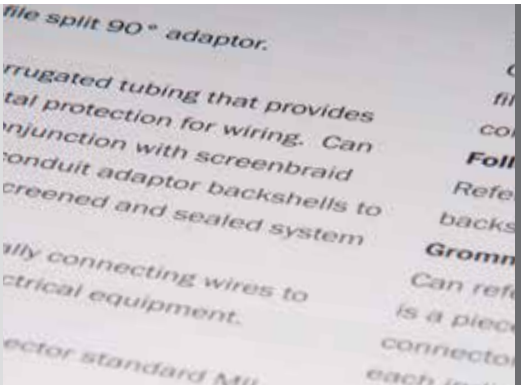

PAGE 356

THIS DRAWING IS THE PROPERTY OF POLAMCO LTD AND MUST NOT BE USED FOR COMMERCIAL PURPOSES WITHOUT WRITTEN CONSENT OF THE COMPANY

# Screened Backshell Product Finder

Polamco

## Interconnect Solutions Worldwide

| SERIES<br>STANDARD SERIES ARE HIGHLIGHTED | Screen Termination | | | | Strain Relief | | Cable Sealing | | Additional Components Required | |
|---|---|---|---|---|---|---|---|---|---|---|
| | Overall Screen | Individual or Multiple Screens | Tool-free | Reworkable | Cable Clamp | Tie Post | Heat Shrink Boot Option | Compression Grommet | Boot | Band |
| **BT**<br>• Screen termination by stainless steel band<br>• Sealing and strain relief by heat shrink boot<br>• Standard range - many sizes available from stock | • | | | | | | • | | • | • |
| **MB**<br>• Designed specifically for micro band, backshell is 5mm shorter than equivalent BT backshell<br>• Sealing and strain relief by heat shrink boot | • | | | | | | • | | • | • |
| **DB**<br>• Double band platform for optimum termination of two distinct overall screens<br>• Sealing and strain relief by heat shrink boot | • | • | | | | | • | | • | • |
| **88**<br>• Screen termination by standard stainless steel band<br>• Strain relief by screw-on cable clamp "can"<br>• "Can" provides protection of screen termination area | • | | | | • | | | | | • |
| **89**<br>• Double band platform for optimum termination of two distinct overall screens<br>• Strain relief by screw-on cable clamp "can"<br>• "Can" provides protection of screen termination area | • | • | | | • | | | | | • |
| **VG**<br>• Backshells in accordance with VG95319-1011<br>• Sealing and strain relief by heat shrink boot<br>• Optional conduit insert for VG-style conduit | • | | | | | | • | | • | • |
| **AP**<br>• Screen termination by standard stainless steel band<br>• European preferred style, without band retention lip<br>• Sealing and strain relief by heat shrink boot | • | | | | | | • | | • | • |
| **DS**<br>• Individual and overall screen termination<br>• Indivdual screens terminated inside the backshell, close to the connector in order to minimise cross-talk | • | • | | | | | • | | • | • |

BAND



THIS DRAWING IS THE PROPERTY OF POLAMCO LTD AND MUST NOT BE USED FOR COMMERCIAL PURPOSES WITHOUT WRITTEN CONSENT OF THE COMPANY

# Screened Backshell Product Finder

Polamco

## Interconnect Solutions Worldwide

| VERSION<br>STANDARD VERSIONS ARE HIGHLIGHTED | Straight | 45° | 90° | Spin Coupling | Anti-Decoupling | Low Profile | VG Approved | HE308 Standard | 38999 SERIES | | |
|---|---|---|---|---|---|---|---|---|---|---|---|
| | | | | | | | | | I | II | III & IV |
| | | | | | | | | | PAGE | | |
| BT - Band Termination | • | • | • | • | | | | | 30 | 32 | 34 |
| BT (CE) - Die Cast Swept Elbow | | | • | • | | | | | | | 36 |
| BT (LP-EB) - Low Profile EB Weld | | | • | • | | • | | | | | 37 |
| BT (SS) - Stainless Steel | • | • | • | • | | | | | | | 38 |
| BT (NB) - Nickel Aluminium Bronze | • | • | • | • | | | | | | | 40 |
| XBT - Composite | • | | | • | • | | | | 42 | 43 | 44 |
| XBT (-F) - Composite | • | | | | | | | | | | 45 |
| BT (AD) - Anti-Decoupling | • | • | • | • | • | | | | 46 | 48 | 50 |
| BT (3C) - Cobra Head | | | • | • | | • | | | 52 | | 53 |
| MB - Micro Band Termination | • | • | • | • | | | | | 54 | 56 | 58 |
| DB - Double Band Termination | • | • | • | • | | | | | 60 | 62 | 64 |
| 88 - Band-In-A-Can | • | • | • | • | | | | | 66 | 68 | 70 |
| 88 (L25) - Micro Band-In-A-Can | • | | | • | | • | | | 72 | 73 | 74 |
| 88 (3C) - Cobra Head | | | • | • | | | | | 75 | | 76 |
| 89 - Double Band-In-A-Can | • | • | • | • | | | | | 78 | 80 | 82 |
| PVG1AH1 - Band Termination | • | | | • | | | • | | | | 84 |
| PVG1BH3 - Band Termination (90°) | | | • | • | | | • | | | | 85 |
| PVG1GH1 - Band Termination | • | | | • | | | • | | | | 86 |
| PVG1HH3 - Band Termination (90°) | | | • | • | | | • | | | | 87 |
| PVG1Z - VG Conduit Adaptor Insert | | | | • | | | • | | | | 88 |
| PVG1DH1 - Low Profile / Step-Up Entry | • | | | • | | • | • | | | | 89 |
| AP - Band Termination | • | • | • | • | | | | | 90 | | 92 |
| DS - Internal & External Band Termination | • | | | • | | | | | 94 | 96 | 98 |
| DS (T3) - Style 2 | • | | | • | | | | | 100 | 102 | 104 |

THIS DRAWING IS THE PROPERTY OF POLAMCO LTD AND MUST NOT BE USED FOR COMMERCIAL PURPOSES WITHOUT WRITTEN CONSENT OF THE COMPANY

# Screened Backshell Product Finder

Polamco

## Interconnect Solutions Worldwide

| | SERIES<br>STANDARD SERIES ARE HIGHLIGHTED | Screen Termination | | | | Strain Relief | | Cable Sealing | | Additional Components Required | |
|---|---|---|---|---|---|---|---|---|---|---|---|
| | | Overall Screen | Individual or Multiple Screens | Tool-free | Reworkable | Cable Clamp | Tie Post | Heat Shrink Boot Option | Compression Grommet | Boot | Band |
| SPRING | **91**<br>• Tool-free screen termination by stainless steel constant-force spring<br>• Sealing and strain relief by heat shrink boot<br>• Standard range - many sizes available from stock<br> | • | | • | • | | | • | | • | |
| MEMORY RING | **60**<br>• Low-profile screen termination by heat-shrink memory metal ring<br>• Pre-terminated screenbraid sock version available<br>• Sealing and strain relief by heat shrink boot<br> | • | | | | | | • | | • | |
| BRAID TRAP | **95**<br>• Tool-free 360° screen termination by "barrel thread" braid trap system<br>• Sealing and strain relief by heat shrink boot<br>• Cable clamp version also available<br> | • | | • | • | • | | • | | | |
| BRAID TAIL | **70**<br>• Pre-terminated screenbraid sock<br>• High-reliability low-profile magna-form ring termination<br>• Sealing and strain relief by heat shrink boot<br> | • | | • | • | | | • | | • | |
| MESH TAPE | **KMA***<br>• 360° termination of multiple individual screens<br>• Mesh tape bundle sytem creates windowless EMI barrier even without overall screenbraid<br>• Sealing and strain relief by heat shrink boot<br> | • | • | • | • | | | • | | • | |
| MESH TAPE | **KMCC***<br>• 360° termination of multiple individual screens<br>• Mesh tape bundle sytem creates windowless EMI barrier even without overall screenbraid<br>• Strain relief by cable clamp: Tool-free assembly and re-work<br> | • | • | • | • | • | | | | | |

* MANUFACTURED UNDER LICENCE 'AGUSTAWESTLAND HELICOPTERS UK PATENT 2239358'



THIS DRAWING IS THE PROPERTY OF POLAMCO LTD AND MUST NOT BE USED FOR COMMERCIAL PURPOSES WITHOUT WRITTEN CONSENT OF THE COMPANY

# Screened Backshell Product Finder

Polamco

## Interconnect Solutions Worldwide

| VERSION<br>STANDARD VERSIONS ARE HIGHLIGHTED | Straight | 45° | 90° | Spin Coupling | Anti-Decoupling | Low Profile | VG Approved | HE308 Standard | 38999 SERIES | | |
|---|---|---|---|---|---|---|---|---|---|---|---|
| | | | | | | | | | I | II | III & IV |
| | | | | | | | | | PAGE | | |
| 91 - Spring Termination | • | • | • | • | | | | | 106 | 108 | 110 |
| 91 (CE) - Die Cast Swept Elbow | | | • | • | | | | | | | 112 |
| 91 (LP-EB) - Low Profile EB Weld | | | • | • | | • | | | | | 113 |
| 91 (SS) - Stainless Steel | • | • | • | • | | | | | | | 114 |
| 91 (NB) - Nickel Aluminium Bronze | • | • | • | • | | | | | | | 116 |
| X91 - Composite | • | | | • | • | | | | 118 | 119 | 120 |
| 91 (3C) - Cobra Head | | | • | • | | • | | | 122 | | 123 |
| 91 - 440 Profile | • | • | • | • | | | | | | | 124 |
| 60 - Memory Ring Termination | • | • | • | • | | | | | 126 | 128 | 130 |
| 60 (SS) - Stainless Steel | • | • | • | • | | | | | | | 132 |
| 60 (NB) - Nickel Aluminium Bronze | • | • | • | • | | | | | | | 134 |
| 60 (T6) - Pre-Terminated Braid Tail | • | • | • | • | | | | | 136 | 138 | 140 |
| 60 (3C) - Cobra Head | | | • | • | | • | | | | | 142 |
| 95 - Braid Trap Termination | • | • | • | • | | | | | 144 | 146 | 148 |
| 95 (SS) - Stainless Steel | • | • | • | • | | | | | | | 150 |
| 95 (NB) - Nickel Aluminium Bronze | • | • | • | • | | | | | | | 152 |
| 95 (3C) - Cobra Head | | | • | • | | • | | | 154 | | 155 |
| 70 - Braid Tail Backshell | • | • | • | • | | | | | 156 | 158 | 160 |
| 70 (SS) - Stainless Steel | • | • | • | • | | | | | | | 162 |
| 70 (NB) - Nickel Aluminium Bronze | • | • | • | • | | | | | | | 164 |
| KMA - Mesh Tape Termination | • | • | • | • | | | | | 166 | 168 | 170 |
| KMA (D) - Double Slot version | • | • | • | • | | | | | 172 | 174 | 176 |
| KMCC - Mesh Tape Cable Clamp | • | • | • | • | | | | | 178 | 180 | 182 |

THIS DRAWING IS THE PROPERTY OF POLAMCO LTD AND MUST NOT BE USED FOR COMMERCIAL PURPOSES WITHOUT WRITTEN CONSENT OF THE COMPANY

# Screened Backshell Product Finder

Polamco

## Interconnect Solutions Worldwide

| SERIES<br>STANDARD SERIES ARE HIGHLIGHTED | | Screen Termination | | | | Strain Relief | | Cable Sealing | | Additional Components Required | |
|---|---|---|---|---|---|---|---|---|---|---|---|
| | | Overall Screen | Individual or Multiple Screens | Tool-free | Reworkable | Cable Clamp | Tie Post | Heat Shrink Boot Option | Compression Grommet | Boot | Band |
| CONE | **308**<br>• Screen termination using two overlapping cones<br>• Sealing and strain relief by heat shrink boot | • | | • | • | | | • | | • | |
| CONE | **318**<br>• Individual and overall screen termination using three overlapping cones<br>• Similar space envelope to 308 series<br>• Sealing and strain relief by heat shrink boot | • | • | • | • | | | • | | • | |
| CONE | **VG**<br>• Backshells in accordance with VG95319-1011<br>• Screen termination using cone-shaped nut<br>• Sealing and strain relief by heat shrink boot | • | | • | • | | | • | | • | |
| CONE | **64**<br>• Individual screen termination using castellated cone<br>• Sealing and strain relief by heat shrink boot<br>• Cable clamp version also available | | • | • | • | • | | • | | | |
| CONE | **35**<br>• Screen termination using two cones<br>• IP68 cable sealing grommet housed in separate chamber to cones<br>• Strain relief by cable clamp: Tool-free assembly and re-work | • | | • | • | • | | | • | | |
| CONE | **36**<br>• Two or three cone option for individual plus optional overall screen termination<br>• IP68 cable sealing grommet housed in separate chamber to cones<br>• Strain relief by cable clamp: Tool-free assembly and re-work | • | • | • | • | • | | | • | | |
| CONE | **39**<br>• Screen termination using single cone<br>• IP68 cable sealing grommet housed in separate chamber to cone<br>• Strain relief by cable clamp: Tool-free assembly and re-work | • | | • | • | • | | | • | | |
| CONE | **CS64**<br>• Individual screen termination using castellated cone<br>• IP68 cable sealing grommet housed in separate chamber to cone<br>• Strain relief by cable clamp: Tool-free assembly and re-work | | • | • | • | • | | | • | | |
| TAK | **TAK**<br>• Screened backshell with pre-installed heatshrink boot<br>• Quick and easy installation<br>• High-reliability magna-form screen termination | • | | • | | | | • | | | |



THIS DRAWING IS THE PROPERTY OF POLAMCO LTD AND MUST NOT BE USED FOR COMMERCIAL PURPOSES WITHOUT WRITTEN CONSENT OF THE COMPANY

# Screened Backshell Product Finder

Polamco

## Interconnect Solutions Worldwide

| VERSION<br>STANDARD VERSIONS ARE HIGHLIGHTED | Straight | 45° | 90° | Spin Coupling | Anti-Decoupling | Low Profile | VG Approved | HE308 Standard | 38999 SERIES | | |
|---|---|---|---|---|---|---|---|---|---|---|---|
| | | | | | | | | | I | II | III & IV |
| | | | | | | | | | PAGE | | |
| 308 - Dual Cone Termination | • | • | • | • | | | | | 186 | 188 | 190 |
| 308 (NB) - Nickel Aluminium Bronze | • | • | • | • | | | | | | | 192 |
| 318 - Triple Cone Termination | • | | | • | | | | | 194 | 195 | 196 |
| PVG1CH1 - Cone Termination | | | • | • | | | • | | | | 198 |
| PVG1FH1 - Cone Termination | | | • | • | | • | • | | | | 199 |
| 64 - Cone Clamp Termination | • | • | • | • | | | | | 200 | 202 | 204 |
| 64 (SS) - Stainless Steel | • | • | • | • | | | | | | | 206 |
| 64 (NB) - Nickel Aluminium Bronze | • | • | • | • | | | | | | | 208 |
| 64 - Step-Up / Step-Down version | • | • | • | • | | | | | 210 | 212 | 214 |
| 64 (SS) - Step-Up / Step-Down version | • | • | • | • | | | | | | | 216 |
| 64 (NB) - Step-Up / Step-Down version | • | • | • | • | | | | | | | 218 |
| 35 - Cone Clamp Cable Sealing Backshell | • | • | • | • | | | | | 220 | 222 | 224 |
| 35 (NE) - Non-Environmental | • | • | • | • | | | | | 226 | 228 | 230 |
| 36 - Cone Clamp Cable Sealing Backshell | • | • | • | • | | | | | 232 | 234 | 236 |
| 36 (NE) - Non-Environmental | • | • | • | • | | | | | 238 | 240 | 242 |
| 39 - Cone Clamp Cable Sealing Backshell | • | • | • | • | | | | | 244 | 246 | 248 |
| 39 (NE) - Non-Environmental | • | • | • | • | | | | | 250 | 252 | 254 |
| CS64 - Cone Clamp Cable Sealing Backshell | • | • | • | • | | | | | 256 | 258 | 260 |
| TAK - Heat Shrink Backshell Kit | • | • | • | • | | | | | 264 | 266 | 268 |
| TAK (SS) - Stainless Steel | • | • | • | • | | | | | | | 270 |
| TAK (NB) - Nickel Aluminium Bronze | • | • | • | • | | | | | | | 272 |

THIS DRAWING IS THE PROPERTY OF POLAMCO LTD AND MUST NOT BE USED FOR COMMERCIAL PURPOSES WITHOUT WRITTEN CONSENT OF THE COMPANY

# Non-Screened Backshell Product Finder

Polamco

## Interconnect Solutions Worldwide

| SERIES (STANDARD SERIES ARE HIGHLIGHTED) | Screen Termination | | | | Strain Relief | | Cable Sealing | | Additional Components Required | |
|---|---|---|---|---|---|---|---|---|---|---|
| | Overall Screen | Individual or Multiple Screens | Tool-free | Reworkable | Cable Clamp | Tie Post | Heat Shrink Boot Option | Compression Grommet | Boot | Band |
| **STRAIN RELIEF** | | | | | | | | | | |
| **96**<br>• Lightweight open-frame cable clamp<br>• Machined from solid for maximum strength and reliability | | | | | • | | | | | |
| **77**<br>• Entry sizes to match cable bundle diameter<br>• Extended can offers protection to rear of connector | | | | | • | | | | | |
| **37**<br>• IP68 cable sealing grommet<br>• Strain relief by cable clamp: Tool-free assembly and re-work | | | | | • | | | • | | |
| **86**<br>• Lightweight strain-relief<br>• Machined from solid for maximum strength and reliability | | | | | | • | | | | • |
| **HEAT SHRINK BOOT** | | | | | | | | | | |
| **97**<br>• Profile specifically designed for optimum performance with heatshrink boot<br>• Standard range - many sizes available from stock | | | | | | | • | | • | |
| **76**<br>• Low profile form for heatshrink boot | | | | | | | • | | • | |
| **VG**<br>• Backshells in accordance with VG95319-1011<br>• Sealing and strain relief by heat shrink boot | | | | | | | • | | • | |
| **GROMMET COMPRESSION NUT** | | | | | | | | | | |
| **98**<br>• Provides protection and compression of the connector grommet | | | | | | | | | | |
| **THREAD ADAPTORS & EXTENDERS** | | | | | | | | | | |
| **THREAD ADAPTORS**<br>• Backshell providing standard Metric, Imperial, PG or NPT thread for a variety of applications | | | | | | | | | | |
| **EXTENDERS/ ANGLE ADAPTORS**<br>• Extends connector rear<br>• Used in conjunction with any screened or non-screened backshell<br>• Straight or angled versions | | | | | | | | | | |



THIS DRAWING IS THE PROPERTY OF POLAMCO LTD AND MUST NOT BE USED FOR COMMERCIAL PURPOSES WITHOUT WRITTEN CONSENT OF THE COMPANY

# Non-Screened Backshell Product Finder

Polamco

## Interconnect Solutions Worldwide

| VERSION<br>STANDARD VERSIONS ARE HIGHLIGHTED | Straight | 45° | 90° | Spin Coupling | Anti-Decoupling | Low Profile | VG Approved | HE308 Standard | 38999 SERIES | | |
|---|---|---|---|---|---|---|---|---|---|---|---|
| | | | | | | | | | I | II | III & IV |
| | | | | | | | | | PAGE | | |
| 96 - Cable Clamp Backshell | • | | • | • | | • | | | 1 | | 3 |
| 96 (SS) - Stainless Steel | • | | • | • | | • | | | | | 5 |
| 96 (NB) - Nickel Aluminium Bronze | • | | • | • | | • | | | | | 7 |
| 96 (AD) - Anti-Decoupling | | | • | • | • | • | | | 9 | | 10 |
| 77 - Cable Clamp, Optional Entry Size | • | • | • | • | | | | | 11 | | 13 |
| 37 - Cable Sealing Backshell | • | • | • | • | | | | | 15 | 17 | 19 |
| 86 - Tie Post Backshell | • | | • | • | | • | | | 21 | | 22 |
| 86 (ET) - Earth Tag Option | • | | • | • | | • | | | 23 | | 24 |
| 97 - Heat Shrink Boot Backshell | • | • | • | • | | | | | 25 | 27 | 29 |
| 97 (SS) - Stainless Steel | • | • | • | • | | | | | | | 31 |
| 97 (NB) - Nickel Aluminium Bronze | • | • | • | • | | | | | | | 33 |
| 97 (ET) - Earth Tag Option | • | • | • | • | | | | | 35 | 37 | 39 |
| 76 - Low Profile Heat Shrink Boot Backshell | • | | | • | | • | | | 41 | | 42 |
| PVG1EH1 - Heat Shrink Boot Backshell | • | | | • | | | • | | | | 43 |
| 98 - E Nut Backshell | • | | | • | | • | | | 45 | | 46 |
| Metric / Unified / PG / NPT Adaptor | • | • | • | • | | | | | 1 | 336 | 338 |
| Metric / Unified / PG / NPT Fixed Adaptor | • | | | | | | | | 340 | | 342 |
| DC - Extender / Angle Adaptor | • | • | • | • | | | | | 344 | 345 | 346 |
| DC (-F) - Fixed Extender Adaptor | • | | | | | | | | | | 347 |

THIS DRAWING IS THE PROPERTY OF POLAMCO LTD AND MUST NOT BE USED FOR COMMERCIAL PURPOSES WITHOUT WRITTEN CONSENT OF THE COMPANY

# Part Numbering System

Polamco

**Interconnect Solutions Worldwide**

95 H 1 17 08 1 C CC L50

POLAMCO SERIES

CONNECTOR INTERFACE
(F = MIL-DTL-38999 SERIES I OR II)
(H = MIL-DTL-38999 SERIES III & IV)

ANGLE
(1 = STRAIGHT)
(2 = 45°)
(3 = 90°)
(4 = 60°)
(5 = 30°)

SHELL SIZE
(09 - 25 FOR MIL-DTL-38999 SERIES I & III)
(08 - 24 FOR MIL-DTL-38999 SERIES II)
(11 - 25 FOR MIL-DTL-38999 SERIES IV)

ENTRY SIZE
(TYPICALLY 03 - 24, IN 16ths / INCH)

MATERIAL
(1 = ALUMINIUM ALLOY)
SEE MATERIAL TABLE FOR OTHER OPTIONS - PAGE 18

FINISH
SEE PLATING TABLE FOR OPTIONS - PAGE 18

SUFFIX
SPECIFIC TO EACH SERIES
SEE SERIES DATASHEET FOR MORE INFORMATION

MODIFICATION CODE
IF DESIRED
SEE MODIFICATION TABLE FOR OPTIONS - PAGE 20



THIS DRAWING IS THE PROPERTY OF POLAMCO LTD AND MUST NOT BE USED FOR COMMERCIAL PURPOSES WITHOUT WRITTEN CONSENT OF THE COMPANY

# Calculating Wire Bundle Diameter

Polamco

Interconnect Solutions Worldwide

Where it's not possible to physically measure the wire bundle diameter it can be estimated from the individual wire diameters using the following calculation.

When selecting the backshell cable entry size from provided tables, it is a good idea to err on the side of too large, as an undersized cable can always be enlarged with tape or a grommet to fit the cable clamp. When calculating wire bundle diameters, note that the gauge # of the wire describes only the diameter of the metal conductor, and not the overall diameter including insulation and/or braids. Refer to the appropriate wire specification for the actual diameter of the wire for use in the following calculations.

Steps:

(1) Determine each type of wire diameter

(2) Choose the multiplication factor from table I below

(3) Calculate the bundle diameter using the following formula:

$$[\text{Bundle Diameter}] = \text{Factor x } \sqrt{n_1 \times {d_1}^2 + n_2 \times {d_2}^2 + n_3 \times {d_3}^2 + \ \dots + n_n \times {d_n}^2}$$

Where $d_1 \dots d_n$ are diameters of each type of wire in the bundle (when using wires from different diameters)

$n_1 \dots n_n$ the quantity of wires with the same diameter

Factor is chosen in according to the total number of wires in the bundle (TABLE I)

(4) Add thickness of any shielding or jacketing to core wire bundle diameter.

[Final OD] = [Bundle Diameter] + 2 x [Shield Thickness] + 2 x [Jacket Thickness]

| TABLE I | | | | | | | |
|---|---|---|---|---|---|---|---|
| MULTIPLICATION FACTORS | | | | | | | |
| **NO OF WIRES** | 1 | 2 | 3 | 4 | 5 | 6 | 7 AND MORE |
| **FACTOR** | 1 | 1.415 | 1.242 | 1.205 | 1.208 | 1.225 | 1.15 |

THIS DRAWING IS THE PROPERTY OF POLAMCO LTD AND MUST NOT BE USED FOR COMMERCIAL PURPOSES WITHOUT WRITTEN CONSENT OF THE COMPANY

STANDARD MATERIAL AND PLATING OPTIONS ARE HIGHLIGHTED

| MATERIAL DESCRIPTION | |
|---|---|
| **1** | **ALUMINIUM ALLOY 6262 / 6082** |
| 2 | NICKEL ALUMINIUM BRONZE DGS 1043 / NES 833 (MARINE APPLICATIONS) |
| 3 | BRASS CZ 121 |
| **4** | **STAINLESS STEEL 303 S31 / 304** |
| 46 | STAINLESS STEEL 316 (MARINE APPLICATIONS) |
| 5 | H.D.H.C COPPER CA 104 |
| 6 | STAINLESS STEEL NUT / ALUMINIUM BODY |
| 7 | BLACK ACETAL (COST-EFFECTIVE PLASTIC) |
| 73 | PEEK GL30 (30% GLASS FILLED) (HIGH TEMPERATURE COMPOSITE) |
| 74 | ULTEM 2300 (30% GLASS FILLED) (STANDARD COMPOSITE) |
| **NOTE: PLEASE CONTACT SALES OFFICE FOR MATERIALS NOT LISTED ABOVE** | |

| PLATING CODE | PLATING DESCRIPTION | ROHS COMPLIANT | ENVIRONMENT PROTECTION/ CONDUCTIVITY |
|---|---|---|---|
| AB | ANODISE BLUE TO DEF 03-25 | YES | NON CONDUCTIVE |
| AR | ANODISE RED TO DEF 03-25 | YES | NON CONDUCTIVE |
| **B** | **CADMIUM, OLIVE DRAB (5-10 MICRONS) QQ-P-416, TYPE II, CLASS 3 OVER ELECTROLESS NICKEL** | **NO*** | **CONDUCTIVE 500 HRS SALT SPRAY** |
| **C** | **ELECTROLESS NICKEL, AMS-C-26074, CLASS 4, GRADE B** | **YES** | **CONDUCTIVE** |
| CHP | ELECTROLESS NICKEL, HIGH PHOSPHOR (9% - 14%), 25 MICRONS MINIMUM, BSEN ISO 4527:2003 | YES | CONDUCTIVE |
| D | BLACK ANODISE HARD PER MIL-A-8625, TYPE III, CLASS 2 | YES | NON CONDUCTIVE |
| F | 30-50 MICRONS BRIGHT ELECTROLESS NICKEL TO MIL-C-26074D, CLASS 4, GRADE C | YES | CONDUCTIVE 500 HRS SALT SPRAY |
| G | BLACK ANODISE, SULPHURIC, PER MIL-A-8625, TYPE II, CLASS 2 | YES | NON CONDUCTIVE |
| H | CADMIUM GOLD, PER QQ-P-416, TYPE II, CLASS 3 | NO* | CONDUCTIVE |
| HA | HARD ANODISE, GREY, 30-50 MICRONS | YES | NON CONDUCTIVE |
| **J** | **PASSIVATE, PER QQ-P-35 OR MI-S-5002 (STAINLESS STEEL ONLY)** | **YES** | **ROHS COMPLIANT** |
| K | CHROMIC ANODISING, DEF 151, TYPE II | NO | NON CONDUCTIVE |
| L | ALOCROM 1200 | NO | CONDUCTIVE |
| LR | IRIDITE CONVERSION ROHS COMPLIANT VERSION OF ALOCROM 1200, CLEAR/IRIDESCENT, ALUMINIUM ONLY | YES | CONDUCTIVE |

* MANY MILITARY PROGRAMS ARE EXEMPT FROM ROHS COMPLIANCE, SEE ROHS WEBSITE FOR MORE INFORMATION



THIS DRAWING IS THE PROPERTY OF POLAMCO LTD AND MUST NOT BE USED FOR COMMERCIAL PURPOSES WITHOUT WRITTEN CONSENT OF THE COMPANY

STANDARD MATERIAL AND PLATING OPTIONS ARE HIGHLIGHTED

| PLATING CODE | PLATING DESCRIPTION | ROHS COMPLIANT | ENVIRONMENT PROTECTION/ CONDUCTIVITY |
|---|---|---|---|
| LV | 5 MICRONS SILVER AND BLACKEN TO DEF 03-9 | YES | CONDUCTIVE |
| M | BRIGHT CADMIUM OVER NICKEL QQ-P-416, TYPE II, CLASS 3 | NO* | CONDUCTIVE 500 HRS SALT SPRAY |
| P | HEAVY NICKEL TO PLATING SPECIFICATION CP07 (500 HOUR SALT SPRAY FINISH) | YES | CONDUCTIVE 500 HRS SALT SPRAY |
| R | CADMIUM, OLIVE DRAB (5-10 MICRONS) QQ-P-416, TYPE II, CLASS 3 OVER ELECTROLESS NICKEL (2.5 - 7.5 MICRONS) REAR OF BACKSHELL TO HAVE SELECTIVE ELECTROLESS PLATING C-PLATE | NO* | CONDUCTIVE 500 HRS SALT SPRAY |
| T | TIN PLATE (COPPER) TO DEF 03-8 | YES | CONDUCTIVE |
| TN | NICKEL/PTFE | YES | CONDUCTIVE 500 HRS SALT SPRAY |
| U | UNPLATED CLEAN FINISH NOT SHOT BLASTED | YES | |
| V | SILVER PLATE 5 MICRONS TO DEF 03-9 | YES | CONDUCTIVE |
| Y | YELLOW CHROMATE OVER CADMIUM QQ-P-416, TYPE II, CLASS 2 | NO | CONDUCTIVE |
| Z | SHOT BLAST FOR NON-REFLECTIVE FINISH | YES | |
| **ZB** | **ZINC COBALT (5-10 MICRONS) OVER ELECTROLESS NICKEL (2.5 - 7.5 MICRONS) WITH A OLIVE DRAB CHROMATE CONVERSION** | **YES** | **CONDUCTIVE 350 HRS SALT SPRAY** |
| ZBC | ZB-NUT (ZINC COBALT OLIVE DRAB OVER ELECTROLESS NICKEL); C-FOLLOWER (ELECTROLESS NICKEL) - 91 SERIES ONLY | YES | CONDUCTIVE 350 HRS SALT SPRAY. ZB. |
| ZBBC | ZB-NUT (ZINC COBALT OLIVE DRAB OVER ELECTROLESS NICKEL); ZB-FOLLOWER (ZINC COBALT OLIVE DRAB OVER ELECTROLESS NICKEL); WITH C MASKED AREA (ELECTROLESS NICKEL - SEE ABOVE) - 91 SERIES ONLY | YES | CONDUCTIVE 350 HRS SALT SPRAY. |
| ZK | ZINC COBALT (5-10 MICRONS) OVER ELECTROLESS NICKEL (2.5 - 7.5 MICRONS) WITH A BLACK CHROMATE CONVERSION | YES | CONDUCTIVE 350 HRS SALT SPRAY. |
| **ZN** | **ZINC NICKEL BLACK PASSIVATE (5-12 MICRONS) OVER ELECTROLESS NICKEL (8-12 MICRONS), ASTM B 841 CLASS 1** | **YES** | **CONDUCTIVE 500 HRS SALT SPRAY** |
| ZNB | ELECTROLESS NICKEL 8-12 MICRONS/ZINC NICKEL 5-12/ PURE ZINC/OLIVE DRAB PASSIVATION, ASTM B 841 CLASS 1 | NO | CONDUCTIVE (NOT ROHS COMPLIANT, UNTESTED 500 HRS SALT SPRAY FINISH) |
| ZNY | ELECTROLESS NICKEL 8-12 MICRONS/ZINC NICKEL 5-12 MICRONS/YELLOW PASSIVATION, ASTM B 841 CLASS 1 | NO | CONDUCTIVE (NOT ROHS COMPLIANT, UNTESTED 500 HRS SALT SPRAY FINISH) |
| ZY | ZINC COBALT YELLOW CHROMATE (7.5 - 12.5 MICRONS) OVER ELECTROLESS NICKEL (2.5 - 7.5 MICRONS) | NO | CONDUCTIVE 500 HRS SALT SPRAY |

* MANY MILITARY PROGRAMS ARE EXEMPT FROM ROHS COMPLIANCE, SEE ROHS WEBSITE FOR MORE INFORMATION

THIS DRAWING IS THE PROPERTY OF POLAMCO LTD AND MUST NOT BE USED FOR COMMERCIAL PURPOSES WITHOUT WRITTEN CONSENT OF THE COMPANY

# Standard Derivatives

## Modification Codes

Polamco

**Interconnect Solutions Worldwide**

| STANDARD MODIFICATION SUFFIXES | | |
|---|---|---|
| **SUFFIX** | **MEANING** | **APPLIES TO SERIES** |
| L_ _ | NON-STANDARD LENGTH (LENGTH SPECIFIED IN MM) | ALL STRAIGHT |
| C_ _ | NON-STANDARD FRONT LENGTH (LENGTH SPECIFIED IN MM) | ALL 45° CIRCULAR EXCEPT 96 SERIES |
| D_ _ | NON-STANDARD REAR LENGTH (LENGTH SPECIFIED IN MM) | ALL 45° CIRCULAR EXCEPT 96 SERIES |
| E_ _ | NON-STANDARD FRONT LENGTH (LENGTH SPECIFIED IN MM) | ALL 90° CIRCULAR EXCEPT 96 SERIES |
| F_ _ | NON-STANDARD REAR LENGTH (LENGTH SPECIFIED IN MM) | ALL 90° CIRCULAR EXCEPT 96 SERIES |
| AD | ANTI-DECOUPLING | ALL CIRCULAR |
| TD | TORQUE-DIFFERENTIAL ANTI-DECOUPLING | ALL CIRCULAR |
| AP | SPANNER HOLES IN COUPLING NUT | ALL CIRCULAR EXCEPT AP SERIES, WHERE SPANNER HOLES ARE STANDARD |
| CON | CONDUCTIVE O-RING | ALL CIRCULAR EXCEPT A, B, R, W & Z INTERFACE, WHICH DON'T HAVE O-RINGS |
| DH | DRAINHOLES | BT, 91, 97 & BLANKING COVERS |
| ET | EARTH TAG | BT, 91 & 97 |
| IET | INTERNAL EARTH TAG | 95 & BLANKING COVERS |
| FN | COUPLING NUT WITH FLATS | ALL CIRCULAR |
| G | COUPLING NUT WITH GRUB SCREW | ALL CIRCULAR EXCEPT K - INTERFACE, WHERE GRUB SCREW IS STANDARD |
| HEX | COUPLING NUT HEX | ALL CIRCULAR |
| N | NICKEL PLATED BRAIDTAIL | 70 SERIES |
| NB | NO BRAIDTAIL | 70 SERIES |
| NG | NO BOOT GROOVE | ALL CIRCULAR WITH BOOT GROOVE AS STANDARD |
| NM | NO PART-MARKING | ALL |
| NS | NO SEAL | ALL CIRCULAR EXCEPT A, B, R, W & Z INTERFACE, WHICH DON'T HAVE O-RINGS |
| TH | TOOTH INSPECTION HOLES IN COUPLING NUT | ALL CIRCULAR WITH ANTI-ROTATION TEETH |

| OTHER MODIFICATIONS, WHICH AREN'T SUFFIXES ARE AS FOLLOWS: | | | |
|---|---|---|---|
| **CODE** | **MEANING** | **APPLIES TO SERIES** | **WHERE IN PART NUMBER** |
| D | DIRECT COUPLING | ALL STRAIGHT CIRCULAR | AS IN 95L1-D20-08-1-C |
| F | DIRECT COUPLING, WITH GROMMET COMPRESSION FOLLOWER | ALL STRAIGHT CIRCULAR | AS IN BTK1-F12-08-1-C-L38 |
| T2 | STYLE II ASSEMBLY WITH SPIN-COUPLING SECONDARY ADAPTOR. SEE PAGE 21 | ALL CIRCULAR WHERE ØG EXCEEDS ØT, EXCEPT 35, 36, 37 & 39 SERIES, WHERE T2 CONFIGURATION IS AUTOMATICALLY SUPPLIED BUT DOES NOT FEATURE IN PART NUMBER | AS IN BTH3-09T209-1-C |
| T3 | STYLE II ASSEMBLY WITH DIRECT-COUPLING SECONDARY ADAPTOR SEE PAGE 21 | ALL STRAIGHT CIRCULAR WHERE ØG EXCEEDS ØT, EXCEPT 35, 36, 37 & 39 SERIES, WHERE T2 CONFIGURATION IS AUTOMATICALLY SUPPLIED BUT DOES NOT FEATURE IN PART NUMBER | AS IN 95M1-10T308-1-C |
| T1 | NOT T2 OR T3 CONFIGURATION | 35, 36, 37 & 39 SERIES THAT WOULD OTHERWISE BE T2 CONFIGURATION | AS IN 39H1-23T120-1-B-L5 |



THIS DRAWING IS THE PROPERTY OF POLAMCO LTD AND MUST NOT BE USED FOR COMMERCIAL PURPOSES WITHOUT WRITTEN CONSENT OF THE COMPANY

STYLE T2 OPTION - **SPIN COUPLING REAR ADAPTOR** (STRAIGHT OR ANGLED STYLES)
ENABLES FEEDTHROUGH WHEN ØG EXCEEDS ØT

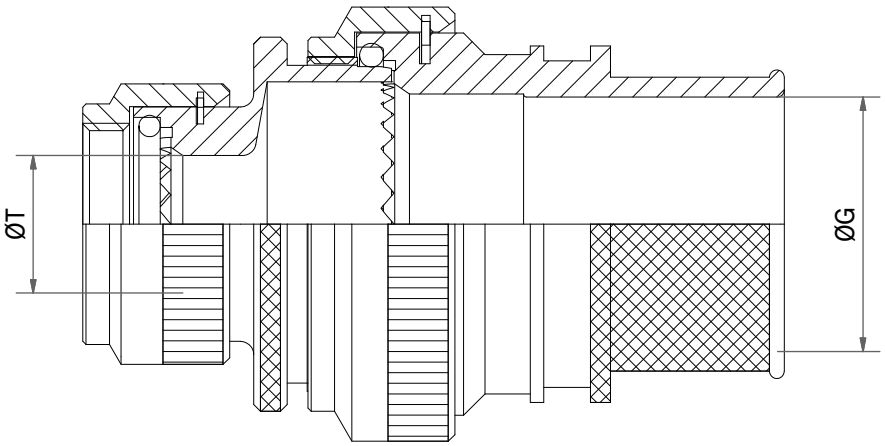


STYLE T3 OPTION - **SOLID REAR ADAPTOR** (STRAIGHT ONLY)
ENABLES FEEDTHROUGH WHEN ØG EXCEEDS ØT

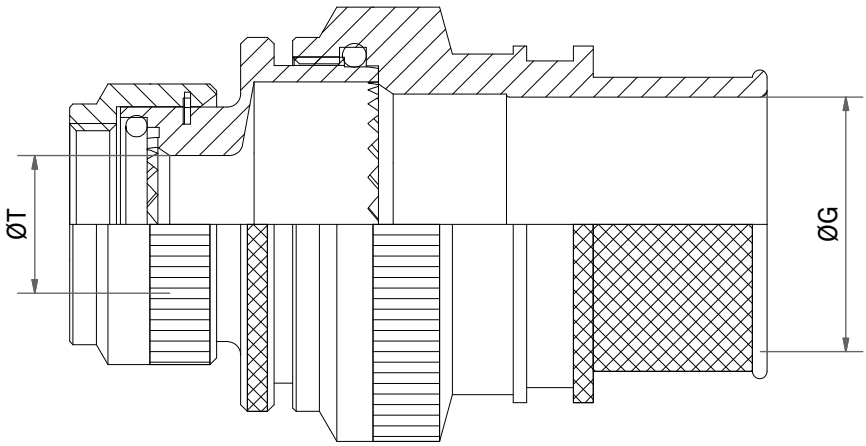


THIS DRAWING IS THE PROPERTY OF POLAMCO LTD AND MUST NOT BE USED FOR
COMMERCIAL PURPOSES WITHOUT WRITTEN CONSENT OF THE COMPANY

# Connector Interface Table

Polamco

## Interconnect Solutions Worldwide

| MANUFACTURERS PREFIX | MANUFACTURER | CONNECTOR SPECS | SERIES / CLASS | COMMENTS | POLAMCO CODE |
|---|---|---|---|---|---|
| 118 | AMPHENOL | MIL-DTL-26482 | SERIES II | | A |
| 149 | DEUTSCH | MIL-DTL-81703 | SERIES I | | Y |
| 162GB | AMPHENOL | MIL-DTL-26482 | SERIES I | | DG |
| 246 | AMPHENOL | MIL-DTL-5015D | MS310_ | | L |
| 348 | AMPHENOL | MIL-DTL-81511 | SERIES I & II | | W |
| 381 | DEUTSCH | | | | A |
| 451 | AMPHENOL (SOCAPEX) | MIL-DTL-26482 | SERIES I | | DS |
| 451 | AMPHENOL (SOCAPEX) | MIL-DTL-26482 | SERIES I | 45107 SINGLE HOLE MOUNT RECEPTACLES ONLY | DM |
| 518 | AMPHENOL | MIL-DTL-83723 | SERIES III | | A |
| 5MS | AB CONNECTORS | DEF STAN 59-35 | PATT 121A | | R |
| 602GB | AMPHENOL | DEF STAN 59-56 | PATT 602 | | A |
| 608 | AMPHENOL | BS9522-F0020 / DEF STAN 59-35 | PATT 608 | | S |
| 608 | AMPHENOL | BS9522-F0020 / DEF STAN 59-35 | PATT 608 | STYLE 37 / 57 SINGLE HOLE MOUNT RECEPTACLES ONLY | 608 |
| 62GB | AMPHENOL | DEF STAN 59-35 | PATT 105 | | D |
| 62GB | AMPHENOL | DEF STAN 59-35 | PATT 105 | STYLE 14 SINGLE HOLE MOUNT RECEPTACLES ONLY | DM |
| 69 | AMPHENOL | MIL-DTL-5015D | MS310_ | | L |
| 711 | AMPHENOL | BS9522-F0042 / -F0043 / PAN6484 / 6499 | | | A |
| 801 | AMPHENOL | | | | A |
| 83730 | DEUTSCH | MIL-DTL-83723 | SERIES III | | A |
| 851 | SOURIAU | MIL-DTL-26482 | SERIES I | | KG |
| 851 | SOURIAU | MIL-DTL-26482 | SERIES I | 02E/02R/07A RECEPTACLES ONLY | DM |
| 8525 | SOURIAU | NAS1599 | | | A |
| 8526 | SOURIAU | HE312 | | | A |
| 8533 | SOURIAU | MIL-DTL-83723 | SERIES III | | A |
| 892 SUFFIX 04 | SOURIAU | ESC004 | | | X |
| 8D | SOURIAU | MIL-DTL-38999 | SERIES III | | H |
| 8LT | SOURIAU | MIL-DTL-38999 | SERIES I | | F |
| 8ST | SOURIAU | VG96912 | | | SM |
| 8T | SOURIAU | MIL-DTL-38999 | SERIES II | | F |
| 944 | AMPHENOL (MATRIX) | MIL-DTL-5015H | MS34__ | | A |
| 97 | AMPHENOL | MIL-DTL-5015D | MS310_ | | L |
| 951 | DEUTSCH | MIL-DTL-26482 | SERIES I | | A |
| 981 | AMPHENOL (MATRIX) | MIL-DTL-5015H | MS34__ | | A |



THIS DRAWING IS THE PROPERTY OF POLAMCO LTD AND MUST NOT BE USED FOR COMMERCIAL PURPOSES WITHOUT WRITTEN CONSENT OF THE COMPANY

# Connector Interface Table

Polamco

Interconnect Solutions Worldwide

| MANUFACTURERS PREFIX | MANUFACTURER | CONNECTOR SPECS | SERIES / CLASS | COMMENTS | POLAMCO CODE |
|---|---|---|---|---|---|
| 9-815 | DEUTSCH | MIL-DTL-81511 | SERIES III & IV | | W |
| 983 | DEUTSCH | ESC 10 | | | A |
| 984 | DEUTSCH | ESC 11 | | | A |
| 999-1 | DEUTSCH | MIL-DTL-38999 | SERIES I | | F |
| A815 | DEUTSCH | MIL-DTL-81511 | SERIES III | | W |
| AB05 | AB CONNECTORS | BS9522-F0017 | | | D |
| AB06 | AB CONNECTORS | BS9522-F0017 | | | D |
| ABB | AB CONNECTORS | BS9522-F0032 | PATT 121B | | Q |
| ABCIR | AB CONNECTORS | VG95234 | | | Q |
| ACA | AMPHENOL | VG95234 | | | Q |
| ADS | DEUTSCH | MIL-DTL-81703 | SERIES I | | Y |
| AFD | DEUTSCH | MIL-DTL-83723 | SERIES I | | A |
| AIB | AMPHENOL | MIL-DTL-5015D / VG95234 | | | QD |
| B815 | DEUTSCH | MIL-DTL-81511 | SERIES IV | | W |
| BL | G & H TECHNOLOGY | MIL-DTL-38999 | SERIES IV | | H |
| BS9520-G0001 | | BS9520-G0001 | | | F |
| BS9520-G0003 | | BS9520-G0003 | | | H |
| BS9522-F0012 | | BS9522-F0012 | PATT 615 | | SM |
| BS9522-F0029 | | BS9522-F0029 | PATT 616 | | F |
| BS9522-F0039 | | BS9522-F0039 | | | H |
| BS9522-N0001 | | BS9522-N0001 | PATT 603 | | D |
| BS9522-N0001 | | BS9522-N0001 | PATT 603 | SINGLE HOLE MOUNT RECEPTACLES ONLY | DM |
| BS9522-N0003 | | BS9522-N0003 | PATT 614 | | F |
| C48 | CINCH | MIL-DTL-26500 | | | E |
| CA | ITT CANNON | MIL-DTL-5015D / VG95234 | MS310_ | | LC |
| CA | ITT CANNON | MIL-DTL-5015D / VG95234 | MS310_ | GROMMET SEALING | LCS |
| CE05 | DDK | MIL-DTL-5015D | MS310_ | | LS |
| CGK | ITT CANNON | VG96912 | | | SM |
| CIR | ITT CANNON (LITTON/ VEAM) | VG95234 | | | QV |
| CT | AB CONNECTORS | MIL-DTL-38999 | SERIES II | | F |
| CV | ITT CANNON | MIL-DTL-5015H | MS34__ | | A |
| D817 | DEUTSCH | MIL-DTL-81703 | SERIES III | | A |
| DA | DEUTSCH | | | | Y |
| DBAD | DEUTSCH | MIL-DTL-81703 | SERIES III | | AD |
| DBAS | DEUTSCH | MIL-DTL-81703 | SERIES III | | AS |

THIS DRAWING IS THE PROPERTY OF POLAMCO LTD AND MUST NOT BE USED FOR COMMERCIAL PURPOSES WITHOUT WRITTEN CONSENT OF THE COMPANY

# Connector Interface Table

Polamco

## Interconnect Solutions Worldwide

| MANUFACTURERS PREFIX | MANUFACTURER | CONNECTOR SPECS | SERIES / CLASS | COMMENTS | POLAMCO CODE |
|---|---|---|---|---|---|
| DEF STAN 59-56 | | DEF STAN 59-56 | PATT 602 | | A |
| DFE | DEUTSCH | MIL-DTL-26482 | SERIES II | | A |
| DIV | DEUTSCH | MIL-DTL-38999 | SERIES IV | | H |
| DJT | DEUTSCH | MIL-DTL-38999 | SERIES I | | F |
| DL | DEUTSCH | MIL-DTL-83723 | SERIES III | | A |
| DM | DEUTSCH | MIL-DTL-81703 | SERIES I | | Y |
| DS | DEUTSCH | | | | Y |
| DTS | DEUTSCH | MIL-DTL-38999 | SERIES III | | H |
| ELIO | SOURIAU | MIL-DTL-38999 | SERIES III | | HE |
| EN2997 | | EN2997 | | | A |
| EN3645 | | EN3645 | | | H |
| EN3646 | | EN3646 | | | A |
| ESC004 | POLAMCO | ESC004 | | | X |
| FDBA | DEUTSCH | LN29504 | | | A |
| GT | AMPHENOL | VG95234 | | | Q |
| HDJ | DEUTSCH | JN1003 | | | SM |
| HE308 | | HE308 | | | F |
| HE309 | | HE309 | | | F |
| HE312 | | HE312 | | | A |
| HE314 | | NFC93422 | | | NC |
| HTMS | AB CONNECTORS | MVEE 695 | | | R |
| IPT06A | GLENAIR (COMMITAL) | MIL-DTL-26482 | SERIES I | CLASS A ONLY (WITHOUT GROMMET) | D |
| IT | COMMITAL | MIL-DTL-5015D | MS310_ | | LM |
| JN1003 | | JN1003 | | | SM |
| JN1032 | | JN1032 | | | A |
| JN1033 | | JN1033 | | | A |
| JN1034 | | JN1034 | | | H |
| JT | AMPHENOL | MIL-DTL-38999 | SERIES II | | F |
| JVS | SOURIAU | CECC75201.002 | | NICKEL ALUMINIUM BRONZE | H |
| KJ | ITT CANNON | MIL-DTL-38999 | SERIES II | | F |
| KJA | ITT CANNON | MIL-DTL-38999 | SERIES III | | H |
| KJL | ITT CANNON | MIL-DTL-38999 | SERIES I | | F |
| KPT | ITT CANNON | MIL-DTL-26482 | SERIES I | | K |
| KPT | ITT CANNON | MIL-DTL-26482 | SERIES I | KPT07 SINGLE HOLE MOUNT RECEPTACLES ONLY | DM |
| LCT | AB CONNECTORS | MIL-DTL-38999 | SERIES I | | F |
| LJT | AMPHENOL | MIL-DTL-38999 | SERIES I | | F |
| LMB | ITT CANNON (LITTON/ VEAM) | DEF STAN 59-35 | PATT 121A | | R |



THIS DRAWING IS THE PROPERTY OF POLAMCO LTD AND MUST NOT BE USED FOR COMMERCIAL PURPOSES WITHOUT WRITTEN CONSENT OF THE COMPANY

| MANUFACTURERS PREFIX | MANUFACTURER | CONNECTOR SPECS | SERIES / CLASS | COMMENTS | POLAMCO CODE |
|---|---|---|---|---|---|
| LMF | WEALD | MK4 | | BRASS CONNECTORS AND ALUMINIUM FREE PLUGS AND SOCKETS | B |
| LMF | WEALD | MK4 | | ALUMINIUM FREE COUPLERS & ALUMINIUM FIXED UNITS ONLY | BF |
| LMG | WEALD | BS9522-F0014 | PATT 104 | BRASS CONNECTORS AND ALUMINIUM FREE PLUGS AND SOCKETS | B |
| LMG | WEALD | BS9522-F0014 | PATT 104 | ALUMINIUM FREE COUPLERS & ALUMINIUM FIXED UNITS ONLY | BG |
| LMH | WEALD | BS9522-F0017 | | | D |
| LMV | WEALD | BS9522-F0053 | | | B |
| LN29500 | | LN29500 | | | K |
| LN29729 | | LN29729 | | | SM |
| LTT | ITT CANNON (TEC) | MIL-DTL-38999 | SERIES I | | F |
| MB3 | AMPHENOL | MIL-DTL-83723 | SERIES III | | A |
| MDR | DEUTSCH | | | | Y |
| MIL-DTL-26482 | | MIL-DTL-26482 | SERIES II | | A |
| MIL-DTL-28840 | | MIL-DTL-28840 | | | Z |
| MIL-DTL-5015D | | MIL-DTL-5015D | MS310_ | FITS ON ENDBELL | LV |
| MIL-DTL-5015H | | MIL-DTL-5015H | MS34__ | | A |
| MIL-DTL-81703 | | MIL-DTL-81703 | SERIES III | | A |
| MIL-DTL-81703 | | MIL-DTL-81703 | SERIES I & II | | Y |
| MIL-DTL-83723 | | MIL-DTL-83723 | SERIES III | | A |
| MIL-DTL-83723 | | MIL-DTL-83723 | SERIES II | | LK |
| MK18 | AB CONNECTORS | DEF STAN 59-35 | MK18 | PLUGS & SQUARE FLANGE RECEPTACLES ONLY | S |
| MK18 | AB CONNECTORS | DEF STAN 59-35 | MK18 | SINGLE HOLE MOUNT RECEPTACLES ONLY | 608 |
| MK25 | AB CONNECTORS | MIL-DTL-38999 | SERIES II | | F |
| MK27 | AB CONNECTORS | MIL-DTL-38999 | SERIES I | | F |
| MK33 | AB CONNECTORS | MIL-DTL-38999 | SERIES III | | H |
| MK38 | AB CONNECTORS | MIL-DTL-38999 | SERIES I | | F |
| MQ3/MT3 | AMPHENOL | MIL-DTL-83723 | SERIES III | | A |
| MSH/MPH | SOURIAU (JUPITER) | 538C AGB/T | | | NCJ |
| NAS1599 | | NAS1599 | | | A |
| PAN6432-1 | | PAN6432-1 | | | A |
| PAN6432-2 | | PAN6432-2 | | | A |
| PAN6433-1 | | PAN6433-1 | | | F |

THIS DRAWING IS THE PROPERTY OF POLAMCO LTD AND MUST NOT BE USED FOR COMMERCIAL PURPOSES WITHOUT WRITTEN CONSENT OF THE COMPANY

# Connector Interface Table

Polamco

## Interconnect Solutions Worldwide

| MANUFACTURERS PREFIX | MANUFACTURER | CONNECTOR SPECS | SERIES / CLASS | COMMENTS | POLAMCO CODE |
|---|---|---|---|---|---|
| PAN6433-2 | | PAN6433-2 | | | SM |
| PC4 | POLAMCO | | | | H |
| PT | ITT CANNON (TEC) | BS9522-F0017 | PATT 105 | | D |
| PT | ITT CANNON (TEC) | BS9522-F0017 | PATT 105 | PT07 SINGLE HOLE MOUNT RECEPTACLES ONLY | DM |
| PT | AMPHENOL | MIL-DTL-26482 | SERIES I | | D |
| PT | AMPHENOL | MIL-DTL-26482 | SERIES I | PT07 SINGLE HOLE MOUNT RECEPTACLES ONLY | DM |
| PTS-DR | AMPHENOL | MIL-DTL-26482 | SERIES II | | A |
| PT-SE | ITT CANNON (VEAM) | BS9522-N0001 | PATT 603 | | DG |
| PT-SE | ITT CANNON (TEC) | BS9522-N0001 | PATT 603 | PT07SE SINGLE HOLE MOUNT RECEPTACLES ONLY | DM |
| PT-SE | AMPHENOL | MIL-DTL-26482 | SERIES I | | DS |
| PT-SE | AMPHENOL | MIL-DTL-26482 | SERIES I | PT07 SINGLE HOLE MOUNT RECEPTACLES ONLY | DM |
| PV | ITT CANNON | MIL-DTL-26482 | SERIES II | | A |
| PVW | ITT CANNON | | | | A |
| PVX | ITT CANNON | DEF STAN 59-56 | PATT 602 | | A |
| QRP | AB CONNECTORS | VG95234 | | | Q |
| RR | DEUTSCH | DEF STAN 59-56 | PATT 602 | | A |
| RSM | DEUTSCH | | | | Y |
| RTK | DEUTSCH | | | | Y |
| SB-104 | AB CONNECTORS | DEF STAN 59-35 | PATT 104 | BRASS CONNECTORS AND ALUMINIUM FREE PLUGS AND SOCKETS | B |
| SB-104 | AB CONNECTORS | DEF STAN 59-35 | PATT 104 | ALUMINIUM FREE COUPLERS & ALUMINIUM FIXED UNITS ONLY | BG |
| SB-MS | AB CONNECTORS | BS9522-F0030 | | | R |
| SJT | AMPHENOL | JN1003 | | | SM |
| SJT | AMPHENOL | JN1003 | | SJT07 JAM NUT RECEPTACLE - CONSULT SALES OFFICE | |
| SLPT | DEUTSCH | MIL-DTL-26482 | SERIES I | | D |
| STK | DEUTSCH | | | | Y |
| STT | ITT CANNON (TEC) | BS9522-F0012 | | | SM |
| TCT | AB CONNECTORS | MIL-DTL-38999 | SERIES III | | H |
| TT | ITT CANNON (TEC) | MIL-DTL-38999 | SERIES II | | F |
| TV | AMPHENOL | MIL-DTL-38999 | SERIES III | | H |
| UTO (“TRIM TRIO”) | SOURIAU | MIL-DTL-26482 | SERIES I | | UT |
| VG95329 | | VG95329 | | | W |
| VTT | ITT CANNON (TEC) | MIL-DTL-38999 | SERIES III | | H |
| ZZW / ZZY | AMPHENOL (PYLE) | MIL-DTL-26500 | | | E |



THIS DRAWING IS THE PROPERTY OF POLAMCO LTD AND MUST NOT BE USED FOR COMMERCIAL PURPOSES WITHOUT WRITTEN CONSENT OF THE COMPANY

# RoHS Compliance Statement

**RoHS - EU Directive 2011/65/EU**
The Directive requires that the homogeneous materials within new electrical and electronic equipment must contain less than 0.1% by weight of lead, mercury, hexavalent chromium, polybrominated biphenyls (PBB) or polybrominated diphenyl ethers (PBDE) and less than 0.01% Cadmium. A list of exemptions for the use of the above substances in specific items is given in Annexes III and IV of Directive 2011/65/EU. The Directive also allows some additional, broader exemptions, for example equipment intended for Military purposes.

Although most of Polamco's products are outside the scope of Directive 2011/65/EU, either because they are components, or as they are specifically manufactured for use in the Military or Aerospace sectors, Polamco is still committed to reducing or eliminating hazardous substances, using substitutes as and when they become available to the industry.

**Lead** - The use of lead is subject to ongoing investigation by Polamco across its present product ranges. Many customers in the Aerospace, Military and Transport sectors have requested that Polamco continue to use 'Leaded Solder' for their specific applications and wherever possible, Polamco will accommodate the requests.

**Cadmium** - Cadmium plated parts are not RoHS compliant. Alternative plating finishes to Cadmium are available from Polamco, typical products being Black Zinc Nickel, Zinc Cobalt, Nickel, Stainless Steel and Nickel Aluminium Bronze.

**Hexavalent Chromium** – Polamco has undertaken extensive research and testing to determine the RoHS compliancy of its passivated plating finishes. Following tests in accordance with the internationally recognised standard IEC 62321:2008, Polamco can confirm that its Black Zinc Nickel plating and its Zinc Cobalt plating (green, black and yellow) are RoHS compliant.

**Mercury** – Polamco does not use mercury in the construction of its product ranges or knowingly introduce any mercury content.

**Polybrominated Diphenyl Ethers (PBDE), including Deca-BDE, and Polybrominated Biphenyls (PBB)** - The vast majority of Polamco products do not contain PBDEs or PBBs; however at this time Polamco is unable to provide a 'blanket' RoHS compliancy statement with respect to these substances for its entire range of products.

If you have any questions, please contact the *Quality Manager* at Polamco.
Further information with regard to the RoHS directive

1. DTI update **www.dti.gov.uk** or **www.dti.gov.uk/sustainability/weee/index.htm**

2. Envirowise **www.envirowise.gov.uk**

RoHS

THIS DRAWING IS THE PROPERTY OF POLAMCO LTD AND MUST NOT BE USED FOR COMMERCIAL PURPOSES WITHOUT WRITTEN CONSENT OF THE COMPANY

# Section Index


8 Backshell Product Finder

16 Product Information

29 Screened Backshells

275 Non-Screened Backshells

323 Conduit Backshells & Conduit

333 Thread Adaptors & Extenders

1 Associated Products

356 Glossary & Terms

# Screened Backshells

Polamco design and manufacture the following Screened Backshells:

## Screened

BT Series
MB Series
DB Series
88 Series
89 Series
VG Series
AP Series
DS Series
91 Series
60 Series
95 Series
70 Series
KMA Series*
KMCC Series*
308 Series
318 Series
64 Series
35 Series
36 Series
39 Series
CS64 Series
TAK Series

## Characteristics

- Backshells for individual or overall 360° screening options
- All parts machined from solid material for reliable strength and performance**
- Available in all materials and straight, 45 or 90° options
- Compatible with Mil-Spec dimensions and performance
- Options to use Heat Shrink Boots
- Options on low profile, extended length and alternative angles

* Manufactured under licence 'AgustaWestland Helicopters UK Patent 2239358'

** With the exception of pages 36 and 112

91 Series

95 Series

64 Series

70 Series

BT Series

# BTF - Standard Band Termination

## Interface F - MIL-DTL-38999 SERIES I

Polamco

**Interconnect Solutions Worldwide**

BAND TERMINATION

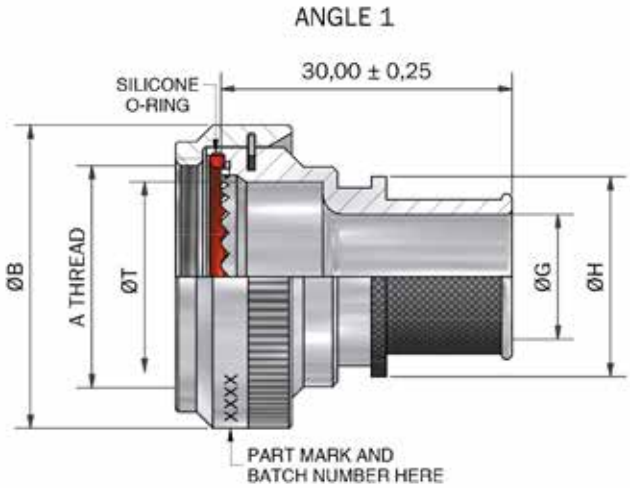


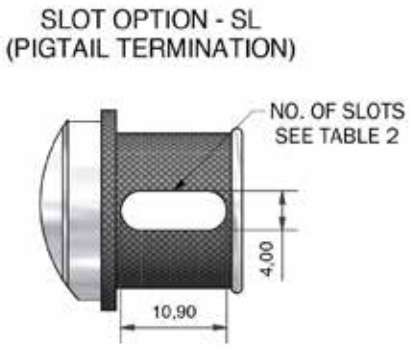


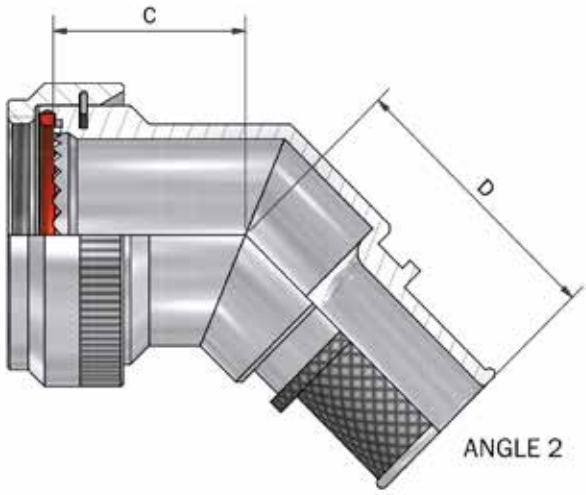


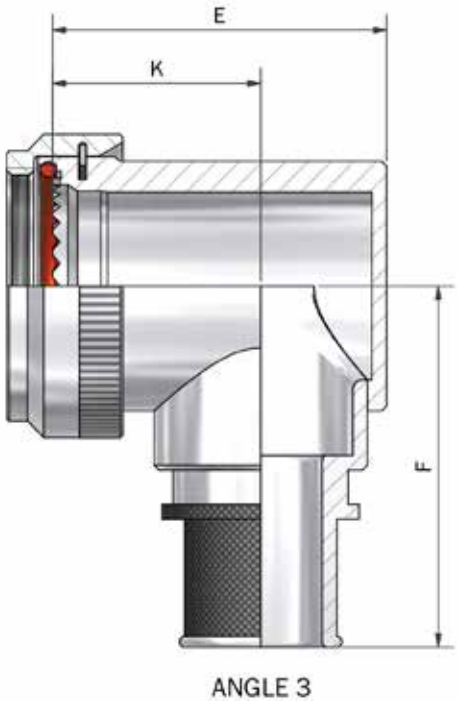


DRAWING NOT TO SCALE, DIMENSIONS IN MM

SEE PAGES 18-26 FOR COMPLETE LIST OF AVAILABLE MATERIALS, FINISHES AND CONNECTOR INTERFACES
(DIMENSIONS, FORM AND O RING SUBJECT TO CHANGE DEPENDING ON BACKSHELL MATERIAL AND CONNECTOR INTERFACE)



THIS DRAWING IS THE PROPERTY OF POLAMCO LTD AND MUST NOT BE USED FOR COMMERCIAL PURPOSES WITHOUT WRITTEN CONSENT OF THE COMPANY

# BTF - Standard Band Termination

## Interface F - MIL-DTL-38999 SERIES I

Polamco

**Interconnect Solutions Worldwide**



TABLE 1

| SHELL SIZE | A THREAD | ØB MAX | ØT MIN | C ±0,5 | D ±0,5 | E MAX | F MAX | K ±0,5 |
|---|---|---|---|---|---|---|---|---|
| 09 | 7/16-28 UNEF | 18,0 | 6,8 | 16,4 | 25,7 | 22,7 | 30,5 | 15,0 |
| 11 | 9/16-24 UNEF | 21,0 | 10,2 | 17,2 | 26,9 | 26,2 | 32,2 | 17,0 |
| 13 | 11/16-24 UNEF | 24,5 | 13,1 | 17,6 | 27,3 | 29,2 | 33,7 | 18,0 |
| 15 | 13/16-20 UNEF | 27,8 | 16,2 | 18,5 | 28,2 | 32,2 | 35,2 | 20,0 |
| 17 | 15/16-20 UNEF | 30,8 | 19,3 | 19,2 | 29,0 | 35,7 | 36,9 | 21,5 |
| 19 | 1 1/16-18 UNEF | 34,1 | 22,3 | 19,6 | 29,3 | 39,7 | 38,5 | 23,0 |
| 21 | 1 3/16-18 UNEF | 37,3 | 25,8 | 20,4 | 30,1 | 42,2 | 41,1 | 25,0 |
| 23 | 1 5/16-18 UNEF | 41,0 | 28,3 | 20,8 | 30,5 | 45,2 | 41,6 | 26,0 |
| 25 | 1 7/16-18 UNEF | 43,7 | 31,5 | 21,7 | 31,4 | 48,2 | 43,1 | 28,0 |

TABLE 2

| ENTRY SIZE | ØG MIN | ØH MAX | NO. OF SLOTS * |
|---|---|---|---|
| 03 | 4,7 | 13,9 | 1 |
| 04 | 6,3 | 13,9 | 1 |
| 05 | 7,9 | 15,5 | 1 |
| 06 | 9,5 | 17,2 | 2 |
| 07 | 11,1 | 18,7 | 2 |
| 08 | 12,7 | 20,3 | 2 |
| 09 | 14,2 | 21,9 | 2 |
| 10 | 15,8 | 23,5 | 2 |
| 11 | 17,4 | 25,1 | 2 |
| 12 | 19,0 | 26,7 | 2 |
| 13 | 20,6 | 28,3 | 2 |
| 14 | 22,2 | 29,9 | 4 |
| 15 | 23,8 | 31,5 | 4 |
| 16 | 25,4 | 33,1 | 4 |
| 17 | 27,0 | 34,7 | 4 |
| 18 | 28,6 | 36,3 | 4 |
| 19 | 30,2 | 37,9 | 4 |
| 20 | 31,8 | 39,5 | 4 |
| 21 | 33,3 | 41,1 | 4 |
| 22 | 35,0 | 42,7 | 4 |
| 23 | 36,5 | 44,3 | 4 |
| 24 | 38,1 | 45,9 | 4 |

TABLE 3

| CODE | FINISH |
|---|---|
| C | ELECTROLESS NICKEL |
| B | CADMIUM OLIVE DRAB OVER ELECTROLESS NICKEL |
| ZB | ZINC COBALT OLIVE DRAB OVER ELECTROLESS NICKEL |
| ZN | ZINC NICKEL BLACK PASSIVATE OVER ELECTROLESS NICKEL |

LIST NOT EXHAUSTIVE, SEE PLATING TABLE FOR OTHER OPTIONS

BTF1-17-08-1-C

SERIES
CONNECTOR INTERFACE
ANGLE
SHELL SIZE (TABLE 1)
ENTRY SIZE (TABLE 2)
MATERIAL
ALUMINIUM ALLOY
FINISH (TABLE 3)
*INSERT SL FOR SLOT OPTION
OMIT FOR STANDARD

**For tooling and assembly instructions see www.polamco.com**

Backshell supplied without Band (see page 349)
Sealing and strain relief achieved with Heat Shrink Boot (see page 354)
Adhesive if required for assembly (see page 352)
Screenbraid for EMC/RFI screening (see page 350)

DRAWING NOT TO SCALE, DIMENSIONS IN MM

SEE PAGES 18-26 FOR COMPLETE LIST OF AVAILABLE MATERIALS, FINISHES AND CONNECTOR INTERFACES
(DIMENSIONS, FORM AND O RING SUBJECT TO CHANGE DEPENDING ON BACKSHELL MATERIAL AND CONNECTOR INTERFACE)

THIS DRAWING IS THE PROPERTY OF POLAMCO LTD AND MUST NOT BE USED FOR COMMERCIAL PURPOSES WITHOUT WRITTEN CONSENT OF THE COMPANY

# BTF - Standard Band Termination

## Interface F - MIL-DTL-38999 SERIES II

Polamco

**Interconnect Solutions Worldwide**

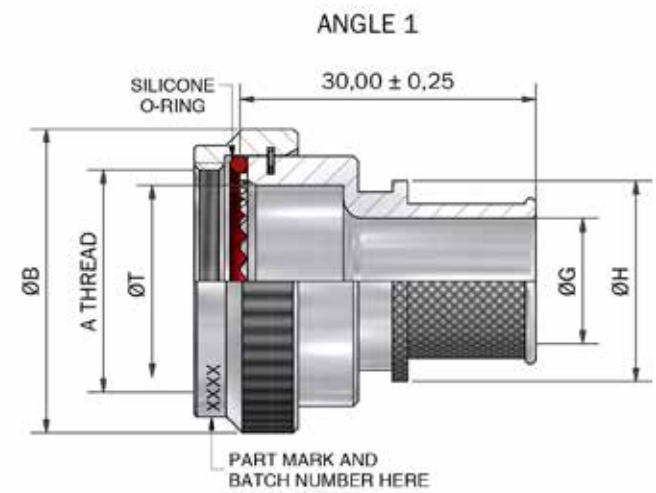


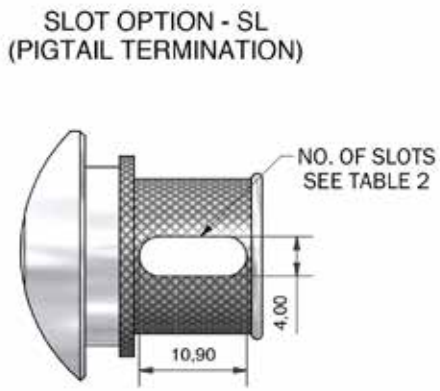


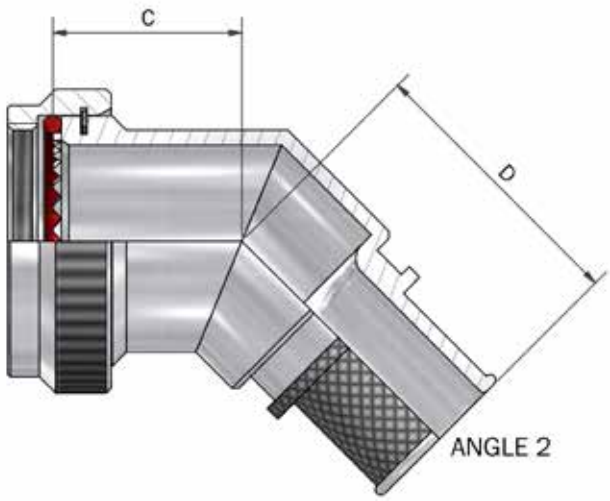


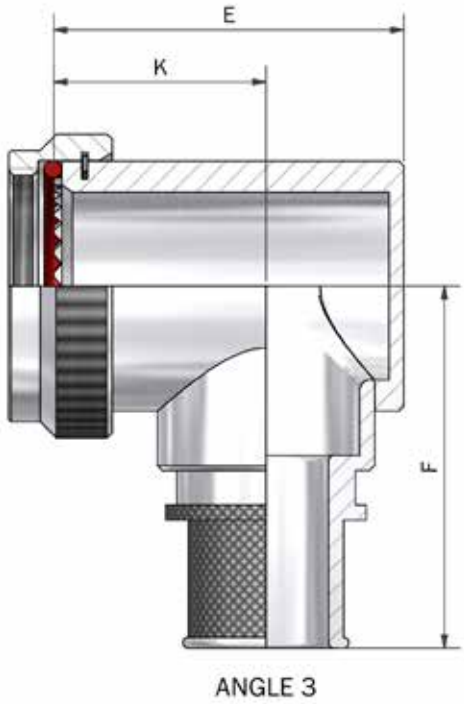


DRAWING NOT TO SCALE, DIMENSIONS IN MM

SEE PAGES 18-26 FOR COMPLETE LIST OF AVAILABLE MATERIALS, FINISHES AND CONNECTOR INTERFACES
(DIMENSIONS, FORM AND O RING SUBJECT TO CHANGE DEPENDING ON BACKSHELL MATERIAL AND CONNECTOR INTERFACE)



THIS DRAWING IS THE PROPERTY OF POLAMCO LTD AND MUST NOT BE USED FOR COMMERCIAL PURPOSES WITHOUT WRITTEN CONSENT OF THE COMPANY

# BTF - Standard Band Termination

## Interface F - MIL-DTL-38999 SERIES II

Polamco

**Interconnect Solutions Worldwide**



TABLE 1

| SHELL SIZE | A THREAD | ØB MAX | ØT MIN | C ±0,5 | D MAX | E MAX | F MAX | K ±0,5 |
|---|---|---|---|---|---|---|---|---|
| 08 | 7/16-28 UNEF | 18,3 | 6,6 | 16,4 | 25,7 | 22,7 | 30,5 | 15,0 |
| 10 | 9/16-24 UNEF | 21,5 | 10,1 | 17,2 | 26,9 | 26,2 | 32,2 | 17,0 |
| 12 | 11/16-24 UNEF | 24,5 | 12,9 | 17,6 | 27,3 | 29,2 | 33,7 | 18,0 |
| 14 | 13/16-20 UNEF | 27,8 | 16,1 | 18,5 | 28,2 | 32,2 | 35,2 | 20,0 |
| 16 | 15/16-20 UNEF | 30,8 | 19,3 | 19,2 | 29,0 | 35,7 | 36,9 | 21,5 |
| 18 | 1 1/16-18 UNEF | 34,1 | 21,7 | 19,6 | 29,3 | 39,7 | 38,5 | 23,0 |
| 20 | 1 3/16-18 UNEF | 37,3 | 24,9 | 20,4 | 30,1 | 42,2 | 41,1 | 25,0 |
| 22 | 1 5/16-18 UNEF | 40,5 | 28,1 | 20,8 | 30,5 | 45,2 | 41,6 | 26,0 |
| 24 | 1 7/16-18 UNEF | 43,7 | 31,3 | 21,7 | 31,4 | 48,2 | 43,1 | 28,0 |

TABLE 2

| ENTRY SIZE | ØG MIN | ØH MAX | NO. OF SLOTS * |
|---|---|---|---|
| 03 | 4,7 | 13,9 | 1 |
| 04 | 6,3 | 13,9 | 1 |
| 05 | 7,9 | 15,5 | 1 |
| 06 | 9,5 | 17,2 | 2 |
| 07 | 11,1 | 18,7 | 2 |
| 08 | 12,7 | 20,3 | 2 |
| 09 | 14,2 | 21,9 | 2 |
| 10 | 15,8 | 23,5 | 2 |
| 11 | 17,4 | 25,1 | 2 |
| 12 | 19,0 | 26,7 | 2 |
| 13 | 20,6 | 28,3 | 2 |
| 14 | 22,2 | 29,9 | 4 |
| 15 | 23,8 | 31,5 | 4 |
| 16 | 25,4 | 33,1 | 4 |
| 17 | 27,0 | 34,7 | 4 |
| 18 | 28,6 | 36,3 | 4 |
| 19 | 30,2 | 37,9 | 4 |
| 20 | 31,8 | 39,5 | 4 |
| 21 | 33,3 | 41,1 | 4 |
| 22 | 35,0 | 42,7 | 4 |
| 23 | 36,5 | 44,3 | 4 |
| 24 | 38,1 | 45,9 | 4 |

TABLE 3

| CODE | FINISH |
|---|---|
| C | ELECTROLESS NICKEL |
| B | CADMIUM OLIVE DRAB OVER ELECTROLESS NICKEL |
| ZB | ZINC COBALT OLIVE DRAB OVER ELECTROLESS NICKEL |
| ZN | ZINC NICKEL BLACK PASSIVATE OVER ELECTROLESS NICKEL |

LIST NOT EXHAUSTIVE, SEE PLATING TABLE FOR OTHER OPTIONS

BTF1-16-08-1-C

- SERIES
- CONNECTOR INTERFACE
- ANGLE
- SHELL SIZE (TABLE 1)
- ENTRY SIZE (TABLE 2)
- MATERIAL
  - ALUMINIUM ALLOY
- FINISH (TABLE 3)
- *INSERT SL FOR SLOT OPTION
  - OMIT FOR STANDARD

**For tooling and assembly instructions see www.polamco.com**

Backshell supplied without Band (see page 349)
Sealing and strain relief achieved with Heat Shrink Boot (see page 354)
Adhesive if required for assembly (see page 352)
Screenbraid for EMC/RFI screening (see page 350)

DRAWING NOT TO SCALE, DIMENSIONS IN MM

SEE PAGES 18-26 FOR COMPLETE LIST OF AVAILABLE MATERIALS, FINISHES AND CONNECTOR INTERFACES
(DIMENSIONS, FORM AND O RING SUBJECT TO CHANGE DEPENDING ON BACKSHELL MATERIAL AND CONNECTOR INTERFACE)

THIS DRAWING IS THE PROPERTY OF POLAMCO LTD AND MUST NOT BE USED FOR COMMERCIAL PURPOSES WITHOUT WRITTEN CONSENT OF THE COMPANY

# BTH - Standard Band Termination

## Interface H - MIL-DTL-38999 SERIES III & IV

Polamco

**Interconnect Solutions Worldwide**

BAND TERMINATION

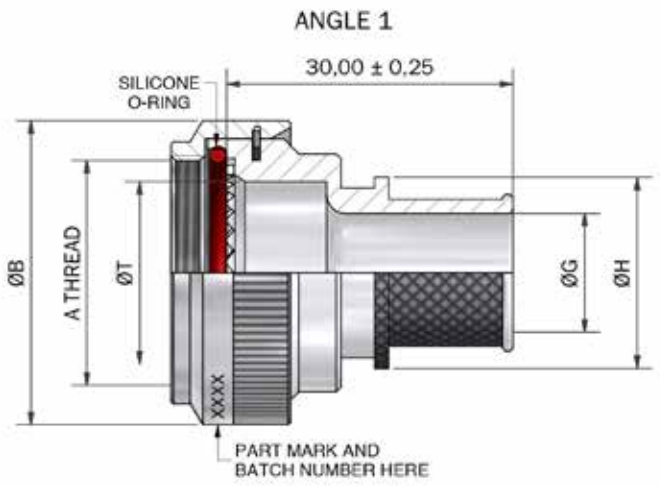


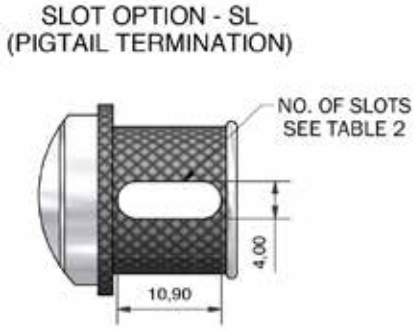


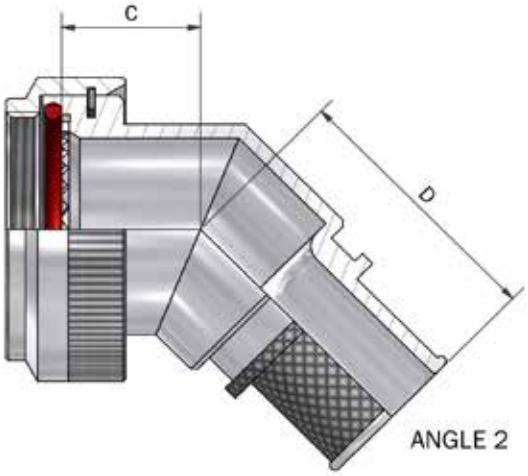


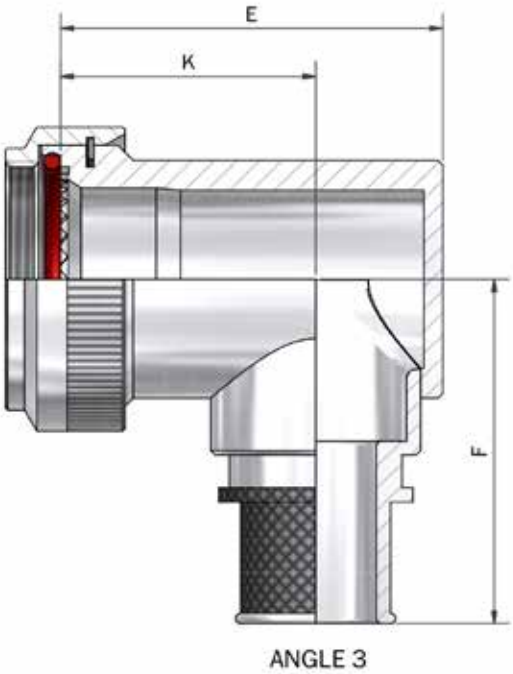


DRAWING NOT TO SCALE, DIMENSIONS IN MM

SEE PAGES 18-26 FOR COMPLETE LIST OF AVAILABLE MATERIALS, FINISHES AND CONNECTOR INTERFACES
(DIMENSIONS, FORM AND O RING SUBJECT TO CHANGE DEPENDING ON BACKSHELL MATERIAL AND CONNECTOR INTERFACE)



THIS DRAWING IS THE PROPERTY OF POLAMCO LTD AND MUST NOT BE USED FOR COMMERCIAL PURPOSES WITHOUT WRITTEN CONSENT OF THE COMPANY

# BTH - Standard Band Termination

## Interface H - MIL-DTL-38999 SERIES III & IV

Polamco

**Interconnect Solutions Worldwide**

TABLE 1

| SHELL SIZE | A THREAD | ØB MAX | ØT MIN | C MAX | D MAX | E MAX | F MAX | K ±0,5 |
|---|---|---|---|---|---|---|---|---|
| 09 | M12 x 1.0 | 18,0 | 6,7 | 13,1 | 25,7 | 25,7 | 30,5 | 17,5 |
| 11 | M15 x 1.0 | 21,0 | 10,2 | 13,9 | 26,9 | 26,7 | 32,2 | 17,5 |
| 13 | M18 x 1.0 | 24,5 | 13,5 | 14,5 | 27,3 | 31,2 | 33,7 | 20,0 |
| 15 | M22 x 1.0 | 29,0 | 16,2 | 15,5 | 28,2 | 37,2 | 35,2 | 24,5 |
| 17 | M25 x 1.0 | 32,5 | 19,4 | 16,1 | 29,0 | 40,2 | 36,9 | 26,7 |
| 19 | M28 x 1.0 | 35,5 | 21,8 | 16,8 | 29,3 | 44,7 | 38,5 | 27,0 |
| 21 | M31 x 1.0 | 37,0 | 25,1 | 17,1 | 30,1 | 49,2 | 40,1 | 30,5 |
| 23 | M34 x 1.0 | 40,0 | 28,2 | 17,7 | 30,5 | 51,7 | 41,6 | 31,5 |
| 25 | M37 x 1.0 | 43,5 | 31,4 | 18,4 | 31,4 | 53,2 | 43,1 | 28,5 |

TABLE 2

| ENTRY SIZE | ØG MIN | ØH MAX | NO. OF SLOTS * |
|---|---|---|---|
| 03 | 4,7 | 13,9 | 1 |
| 04 | 6,3 | 13,9 | 1 |
| 05 | 7,9 | 15,5 | 1 |
| 06 | 9,5 | 17,2 | 2 |
| 07 | 11,1 | 18,7 | 2 |
| 08 | 12,7 | 20,3 | 2 |
| 09 | 14,2 | 21,9 | 2 |
| 10 | 15,8 | 23,5 | 2 |
| 11 | 17,4 | 25,1 | 2 |
| 12 | 19,0 | 26,7 | 2 |
| 13 | 20,6 | 28,3 | 2 |
| 14 | 22,2 | 29,9 | 4 |
| 15 | 23,8 | 31,5 | 4 |
| 16 | 25,4 | 33,1 | 4 |
| 17 | 27,0 | 34,7 | 4 |
| 18 | 28,6 | 36,3 | 4 |
| 19 | 30,2 | 37,9 | 4 |
| 20 | 31,8 | 39,5 | 4 |
| 21 | 33,3 | 41,1 | 4 |
| 22 | 35,0 | 42,7 | 4 |
| 23 | 36,5 | 44,3 | 4 |
| 24 | 38,1 | 45,9 | 4 |

TABLE 3

| CODE | FINISH |
|---|---|
| C | ELECTROLESS NICKEL |
| B | CADMIUM OLIVE DRAB OVER ELECTROLESS NICKEL |
| ZB | ZINC COBALT OLIVE DRAB OVER ELECTROLESS NICKEL |
| ZN | ZINC NICKEL BLACK PASSIVATE OVER ELECTROLESS NICKEL |

LIST NOT EXHAUSTIVE, SEE PLATING TABLE FOR OTHER OPTIONS

BTH1-17-08-1-C

- SERIES
- CONNECTOR INTERFACE
- ANGLE
- SHELL SIZE (TABLE 1)
- ENTRY SIZE (TABLE 2)
- MATERIAL
  - ALUMINIUM ALLOY
- FINISH (TABLE 3)
- *INSERT SL FOR SLOT OPTION
  - OMIT FOR STANDARD

**For tooling and assembly instructions see www.polamco.com**

Backshell supplied without Band (see page 349)
Sealing and strain relief achieved with Heat Shrink Boot (see page 354)
Adhesive if required for assembly (see page 352)
Screenbraid for EMC/RFI screening (see page 350)

DRAWING NOT TO SCALE, DIMENSIONS IN MM

SEE PAGES 18-26 FOR COMPLETE LIST OF AVAILABLE MATERIALS, FINISHES AND CONNECTOR INTERFACES
(DIMENSIONS, FORM AND O RING SUBJECT TO CHANGE DEPENDING ON BACKSHELL MATERIAL AND CONNECTOR INTERFACE)

THIS DRAWING IS THE PROPERTY OF POLAMCO LTD AND MUST NOT BE USED FOR COMMERCIAL PURPOSES WITHOUT WRITTEN CONSENT OF THE COMPANY

# BTH3 (CE) - Band Termination Die Cast Swept Elbow

## Interface H - MIL-DTL-38999 SERIES III & IV

Polamco

**Interconnect Solutions Worldwide**

BAND TERMINATION

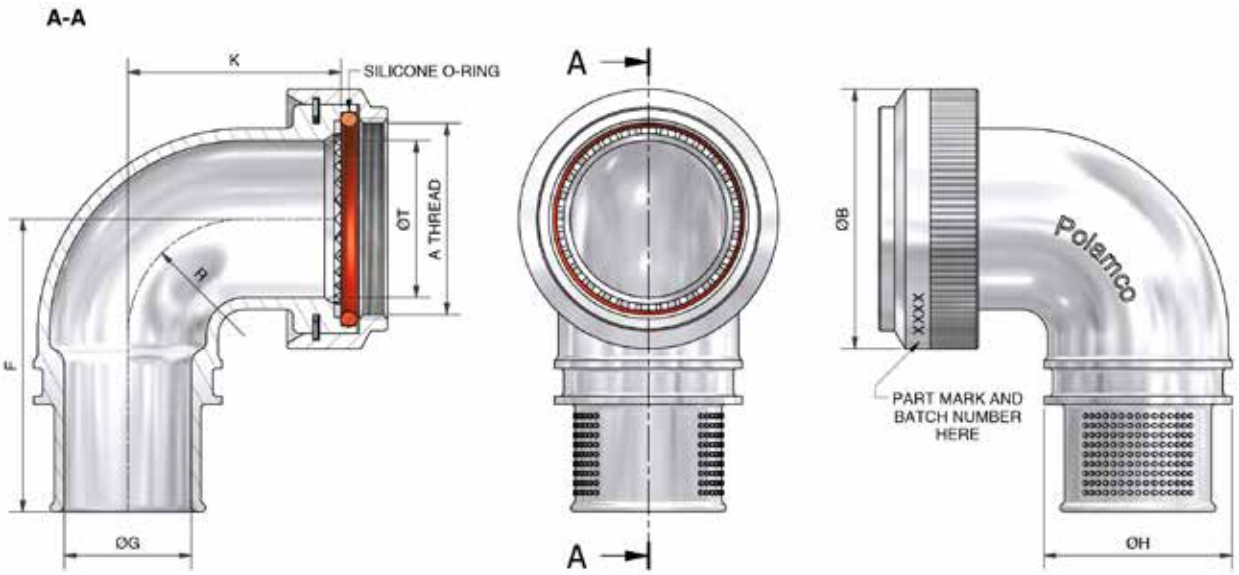


TABLE 1

| SIZE | A THREAD | ØB MAX | ØT MIN | F MAX | K +/-0.5 | R REF. | ØG MIN | ØH MAX |
|---|---|---|---|---|---|---|---|---|
| 09-04 | M12 x 1.0 | 18,0 | 6,7 | 30,5 | 17,5 | 8,35 | 6,40 | 14,2 |
| 11-05 | M15 x 1.0 | 21,0 | 10,2 | 32,3 | 17,5 | 9,95 | 7,92 | 15,7 |
| 13-07 | M18 x 1.0 | 24,5 | 13,5 | 33,8 | 20,0 | 11,40 | 11,12 | 19,0 |
| 15-08 | M22 x 1.0 | 29,0 | 16,2 | 35,7 | 24,5 | 13,00 | 12,70 | 20,5 |
| 17-10 | M25 x 1.0 | 32,5 | 19,4 | 37,0 | 26,7 | 14,60 | 15,88 | 23,7 |
| 19-12 | M28 x 1.0 | 35,5 | 21,8 | 38,6 | 27,0 | 15,70 | 19,05 | 26,9 |
| 21-14 | M31 x 1.0 | 37,0 | 25,1 | 40,3 | 30,5 | 17,30 | 22,23 | 30,1 |
| 23-16 | M34 x 1.0 | 40,0 | 28,2 | 41,9 | 31,5 | 18,85 | 25,40 | 33,2 |
| 25-16 | M37 x 1.0 | 43,5 | 31,4 | 43,3 | 31,5 | 20,45 | 25,40 | 33,3 |

TABLE 2

| CODE | PLATING |
|---|---|
| B | CADMIUM OLIVE DRAB OVER ELECTROLESS NICKEL |
| C | ELECTROLESS NICKEL |
| G | BLACK ANODISE |
| ZB | ZINC COBALT OLIVE DRAB OVER ELECTROLESS NICKEL |
| ZN | ZINC NICKEL BLACK PASSIVATE OVER ELECTROLESS NICKEL |

LIST NOT EXHAUSTIVE, SEE PLATING TABLE FOR OTHER OPTIONS

BTH3-17-10-1-C-CE

- SERIES
- CONNECTOR INTERFACE
- ANGLE (3 - 90°)
- SIZE (TABLE 1)
- MATERIAL
  - ALUMINIUM ALLOY
- FINISH (TABLE 2)
- CAST ELBOW OPTION

**For tooling and assembly instructions see www.polamco.com**

Backshell supplied without Band (see page 349)
Sealing and strain relief achieved with Heat Shrink Boot (see page 354)
Adhesive if required for assembly (see page 352)
Screenbraid for EMC/RFI screening (see page 350)

DRAWING NOT TO SCALE, DIMENSIONS IN MM

SEE PAGES 18-26 FOR COMPLETE LIST OF AVAILABLE MATERIALS, FINISHES AND CONNECTOR INTERFACES
(DIMENSIONS, FORM AND O RING SUBJECT TO CHANGE DEPENDING ON BACKSHELL MATERIAL AND CONNECTOR INTERFACE)



THIS DRAWING IS THE PROPERTY OF POLAMCO LTD AND MUST NOT BE USED FOR COMMERCIAL PURPOSES WITHOUT WRITTEN CONSENT OF THE COMPANY

# BTH3 (LP-EB) - Band Termination Low Profile EB Weld

## Interface H - MIL-DTL-38999 SERIES III & IV

Polamco

**Interconnect Solutions Worldwide**



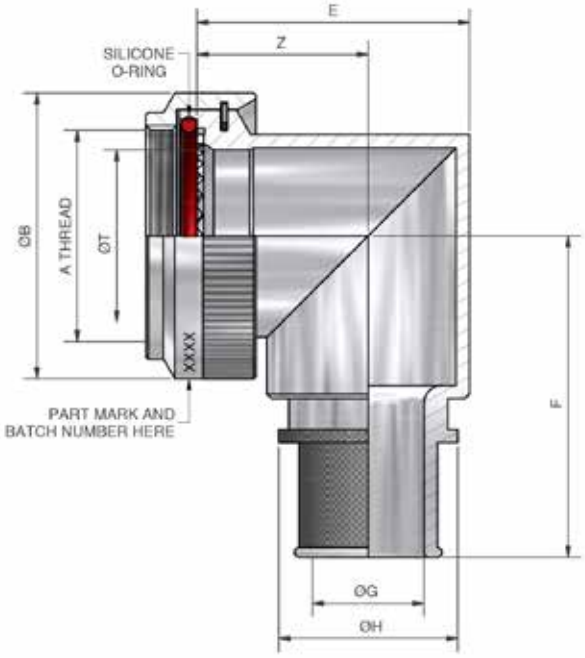


TABLE 1

| SHELL SIZE | A THREAD | ØB MAX | E MAX | F MAX | ØT | Z | MAX ENTRY |
|---|---|---|---|---|---|---|---|
| 09 | M12 x 1.0 | 18,0 | 18,0 | 30,5 | 6,8 | 12,8 | 07 |
| 11 | M15 x 1.0 | 21,0 | 21,5 | 32,2 | 10,3 | 14,1 | 09 |
| 13 | M18 x 1.0 | 24,5 | 25,0 | 33,7 | 13,6 | 15,8 | 11 |
| 15 | M22 x 1.0 | 29,0 | 28,5 | 35,2 | 16,3 | 18,1 | 13 |
| 17 | M25 x 1.0 | 32,5 | 31,5 | 36,9 | 19,5 | 19,7 | 15 |
| 19 | M28 x 1.0 | 35,5 | 35,0 | 38,5 | 21,9 | 21,5 | 17 |
| 21 | M31 x 1.0 | 37,0 | 37,0 | 40,1 | 25,2 | 22,0 | 19 |
| 23 | M34 x 1.0 | 40,0 | 40,5 | 41,6 | 28,3 | 24,1 | 21 |
| 25 | M37 x 1.0 | 43,5 | 43,5 | 43,1 | 31,5 | 25,8 | 22 |

TABLE 2

| ENTRY SIZE | ØG | ØH MAX |
|---|---|---|
| 03 | 4,77 | 13,9 |
| 04 | 6,35 | 13,9 |
| 05 | 7,92 | 15,5 |
| 06 | 9,52 | 17,2 |
| 07 | 11,10 | 18,7 |
| 08 | 12,70 | 20,3 |
| 09 | 14,27 | 21,9 |
| 10 | 15,88 | 23,5 |
| 11 | 17,47 | 25,1 |
| 12 | 19,05 | 26,7 |
| 13 | 20,62 | 28,3 |
| 14 | 22,23 | 29,9 |
| 15 | 23,82 | 31,5 |
| 16 | 25,40 | 33,1 |
| 17 | 27,00 | 34,7 |
| 18 | 28,60 | 36,3 |
| 19 | 30,20 | 37,9 |
| 20 | 31,80 | 39,5 |
| 21 | 33,38 | 41,1 |
| 22 | 35,00 | 42,7 |

TABLE 3

| CODE | MATERIAL / PLATING |
|---|---|
| 1-C | ALUMINIUM / ELECTROLESS NICKEL |
| 1-B | ALUMINIUM / CADMIUM OLIVE DRAB OVER ELECTROLESS NICKEL |
| 1-ZB | ALUMINIUM / ZINC COBALT OLIVE DRAB OVER ELECTROLESS NICKEL |
| 1-ZN | ALUMINIUM / ZINC NICKEL BLACK PASSIVATE OVER ELECTROLESS NICKEL |
| 4-J | STAINLESS STEEL / PASSIVATE |
| 2-Z | NICKEL ALUMINIUM BRONZE / SHOT BLAST |

LIST NOT EXHAUSTIVE, SEE PLATING TABLE FOR OTHER OPTIONS

BTH3-17-08-1-C-LP-EB

- SERIES
- CONNECTOR INTERFACE
- ANGLE (3 - 90°)
- SHELL SIZE (TABLE 1)
- ENTRY SIZE (TABLE 2)
- MATERIAL (TABLE 3)
- FINISH (TABLE 3)
- LOW PROFILE VARIANT
- E.B. WELD VARIANT

**For tooling and assembly instructions see www.polamco.com**

Backshell supplied without Band (see page 349)
Sealing and strain relief achieved with Heat Shrink Boot (see page 354)
Adhesive if required for assembly (see page 352)
Screenbraid for EMC/RFI screening (see page 350)

DRAWING NOT TO SCALE, DIMENSIONS IN MM

SEE PAGES 18-26 FOR COMPLETE LIST OF AVAILABLE MATERIALS, FINISHES AND CONNECTOR INTERFACES
(DIMENSIONS, FORM AND O RING SUBJECT TO CHANGE DEPENDING ON BACKSHELL MATERIAL AND CONNECTOR INTERFACE)

THIS DRAWING IS THE PROPERTY OF POLAMCO LTD AND MUST NOT BE USED FOR COMMERCIAL PURPOSES WITHOUT WRITTEN CONSENT OF THE COMPANY

# BT (SS) - Band Termination Stainless Steel

## Interface H - MIL-DTL-38999 SERIES III & IV

Polamco

**Interconnect Solutions Worldwide**

BAND TERMINATION

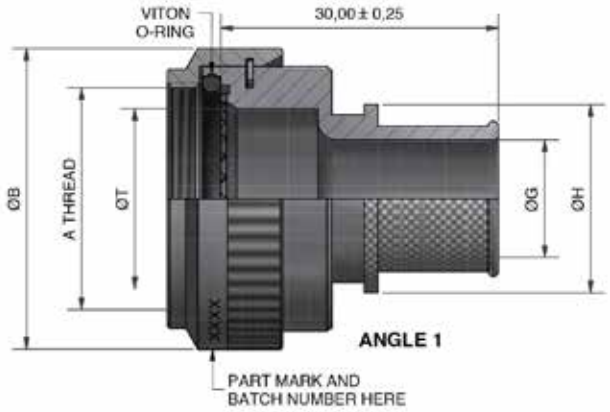


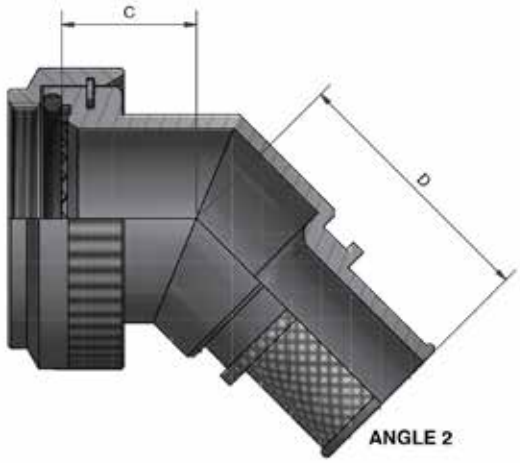


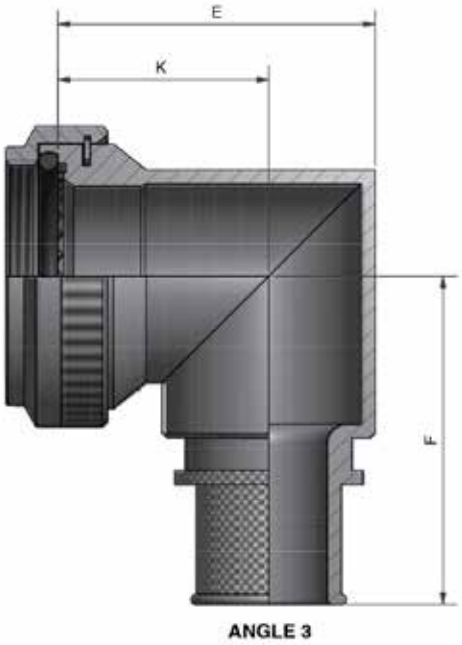


DRAWING NOT TO SCALE, DIMENSIONS IN MM

SEE PAGES 18-26 FOR COMPLETE LIST OF AVAILABLE MATERIALS, FINISHES AND CONNECTOR INTERFACES
(DIMENSIONS, FORM AND O RING SUBJECT TO CHANGE DEPENDING ON BACKSHELL MATERIAL AND CONNECTOR INTERFACE)



THIS DRAWING IS THE PROPERTY OF POLAMCO LTD AND MUST NOT BE USED FOR COMMERCIAL PURPOSES WITHOUT WRITTEN CONSENT OF THE COMPANY

# BT (SS) - Band Termination Stainless Steel

## Interface H - MIL-DTL-38999 SERIES III & IV

Polamco

**Interconnect Solutions Worldwide**



TABLE 1

| SHELL SIZE | A THREAD | ØB MAX | ØT MIN | C MAX | D MAX | E MAX | F MAX | K ± 0,5 |
|---|---|---|---|---|---|---|---|---|
| 09 | M12 x 1.0 | 18,0 | 6,7 | 13,1 | 25,7 | 21,5 | 29,1 | 16,3 |
| 11 | M15 x 1.0 | 21,0 | 10,2 | 13,9 | 26,9 | 24,6 | 31,3 | 17,2 |
| 13 | M18 x 1.0 | 24,5 | 13,5 | 14,5 | 27,3 | 28,6 | 33,1 | 19,4 |
| 15 | M22 x 1.0 | 29,0 | 16,2 | 15,5 | 28,2 | 31,3 | 35,0 | 21,0 |
| 17 | M25 x 1.0 | 32,5 | 19,4 | 16,1 | 29,0 | 34,5 | 35,7 | 22,8 |
| 19 | M28 x 1.0 | 35,5 | 21,8 | 16,8 | 29,3 | 38,7 | 37,2 | 25,3 |
| 21 | M31 x 1.0 | 37,0 | 25,1 | 17,1 | 30,1 | 41,0 | 38,9 | 26,1 |
| 23 | M34 x 1.0 | 40,0 | 28,2 | 17,7 | 30,5 | 43,9 | 40,3 | 27,6 |
| 25 | M37 x 1.0 | 43,5 | 31,4 | 18,4 | 31,4 | 46,7 | 45,1 | 29,1 |

TABLE 2

| ENTRY SIZE | ØG MIN | ØH MAX |
|---|---|---|
| 03 | 4,7 | 13,9 |
| 04 | 6,3 | 13,9 |
| 05 | 7,9 | 15,5 |
| 06 | 9,5 | 17,2 |
| 07 | 11,1 | 18,7 |
| 08 | 12,7 | 20,3 |
| 09 | 14,2 | 21,9 |
| 10 | 15,8 | 23,5 |
| 11 | 17,4 | 25,1 |
| 12 | 19,0 | 26,7 |
| 13 | 20,6 | 28,3 |
| 14 | 22,2 | 29,9 |
| 15 | 23,8 | 31,5 |
| 16 | 25,4 | 33,1 |
| 17 | 27,0 | 34,7 |
| 18 | 28,6 | 36,3 |
| 19 | 30,2 | 37,9 |
| 20 | 31,8 | 39,5 |
| 21 | 33,3 | 41,1 |
| 22 | 35,0 | 42,7 |
| 23 | 36,5 | 44,3 |
| 24 | 38,1 | 45,9 |

TABLE 3

| CODE | MATERIAL / PLATING |
|---|---|
| 4-J | STAINLESS STEEL 303 S31 / PASSIVATE |
| 46-J | STAINLESS STEEL 316 / PASSIVATE |

LIST NOT EXHAUSTIVE, FOR COMPREHENSIVE LIST AND SPECS, SEE WEBSITE

BTH1-17-08-4-J

- SERIES
- CONNECTOR INTERFACE
- ANGLE
- SHELL SIZE (TABLE 1)
- ENTRY SIZE (TABLE 2)
- MATERIAL (TABLE 3)
- FINISH (TABLE 3)

**For tooling and assembly instructions see www.polamco.com**

Backshell supplied without Band (see page 349)
Sealing and strain relief achieved with Heat Shrink Boot (see page 354)
Adhesive if required for assembly (see page 352)
Screenbraid for EMC/RFI screening (see page 350)

DRAWING NOT TO SCALE, DIMENSIONS IN MM

SEE PAGES 18-26 FOR COMPLETE LIST OF AVAILABLE MATERIALS, FINISHES AND CONNECTOR INTERFACES
(DIMENSIONS, FORM AND O RING SUBJECT TO CHANGE DEPENDING ON BACKSHELL MATERIAL AND CONNECTOR INTERFACE)

THIS DRAWING IS THE PROPERTY OF POLAMCO LTD AND MUST NOT BE USED FOR COMMERCIAL PURPOSES WITHOUT WRITTEN CONSENT OF THE COMPANY

# BTH (NB) - Band Termination
# Nickel Aluminium Bronze

## Interface H - MIL-DTL-38999 SERIES III & IV

Polamco

**Interconnect Solutions Worldwide**

BAND TERMINATION

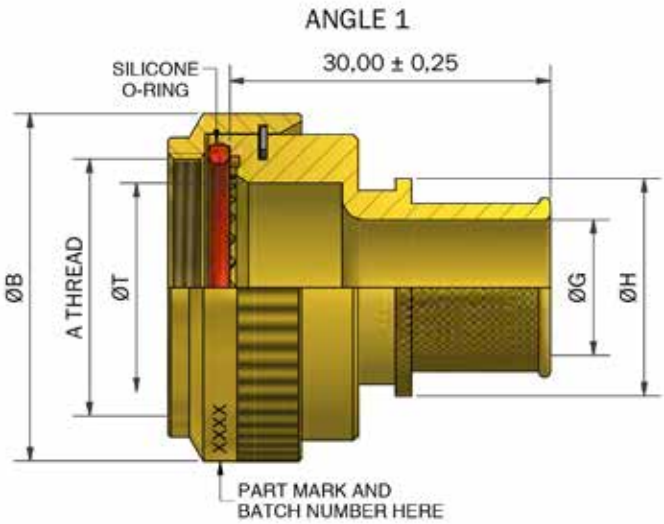


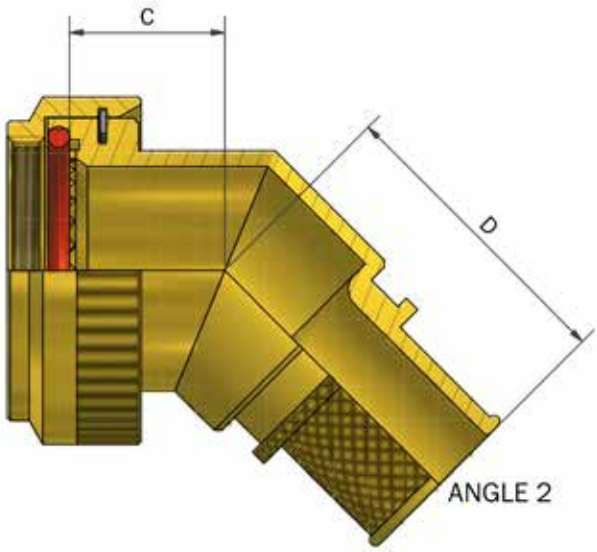


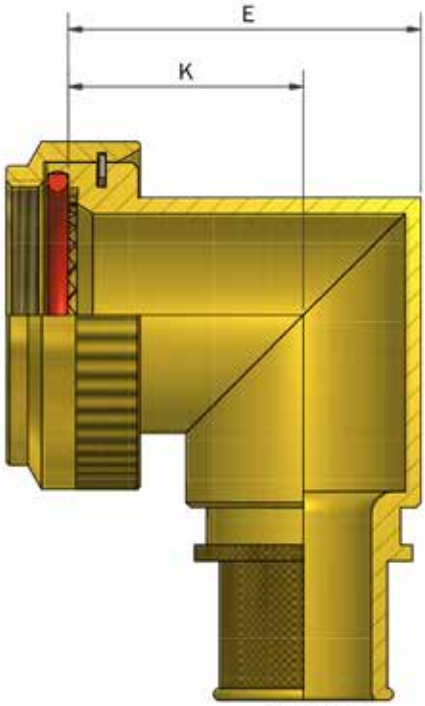


DRAWING NOT TO SCALE, DIMENSIONS IN MM

SEE PAGES 18-26 FOR COMPLETE LIST OF AVAILABLE MATERIALS, FINISHES AND CONNECTOR INTERFACES
(DIMENSIONS, FORM AND O RING SUBJECT TO CHANGE DEPENDING ON BACKSHELL MATERIAL AND CONNECTOR INTERFACE)



THIS DRAWING IS THE PROPERTY OF POLAMCO LTD AND MUST NOT BE USED FOR COMMERCIAL PURPOSES WITHOUT WRITTEN CONSENT OF THE COMPANY

# BTH (NB) - Band Termination
# Nickel Aluminium Bronze
## Interface H - MIL-DTL-38999 SERIES III & IV

Polamco

**Interconnect Solutions Worldwide**



TABLE 1

| SHELL SIZE | A THREAD | ØB MAX | ØT MIN | C MAX | D MAX | E MAX | F MAX | K ±0,5 |
|---|---|---|---|---|---|---|---|---|
| 09 | M12 x 1.0 | 18,0 | 6,7 | 13,1 | 24,7 | 21,5 | 29,1 | 16,3 |
| 11 | M15 x 1.0 | 21,0 | 10,2 | 13,9 | 25,9 | 24,6 | 31,3 | 17,2 |
| 13 | M18 x 1.0 | 24,5 | 13,5 | 14,5 | 26,3 | 28,6 | 33,1 | 19,4 |
| 15 | M22 x 1.0 | 29,0 | 16,2 | 15,5 | 27,2 | 31,3 | 35,0 | 21,0 |
| 17 | M25 x 1.0 | 32,5 | 19,4 | 16,1 | 28,0 | 34,5 | 35,7 | 22,8 |
| 19 | M28 x 1.0 | 35,5 | 21,8 | 16,8 | 28,0 | 38,7 | 37,2 | 25,3 |
| 21 | M31 x 1.0 | 37,0 | 25,1 | 17,1 | 29,1 | 41,0 | 38,9 | 26,1 |
| 23 | M34 x 1.0 | 40,0 | 28,2 | 17,7 | 29,5 | 43,9 | 40,3 | 27,6 |
| 25 | M37 x 1.0 | 43,5 | 31,4 | 18,4 | 30,4 | 46,7 | 45,1 | 29,1 |

TABLE 2

| ENTRY SIZE | ØG MIN | ØH MAX |
|---|---|---|
| 03 | 4,7 | 13,9 |
| 04 | 6,3 | 13,9 |
| 05 | 7,9 | 15,5 |
| 06 | 9,5 | 17,2 |
| 07 | 11,1 | 18,7 |
| 08 | 12,7 | 20,3 |
| 09 | 14,2 | 21,9 |
| 10 | 15,8 | 23,5 |
| 11 | 17,4 | 25,1 |
| 12 | 19,0 | 26,7 |
| 13 | 20,6 | 28,3 |
| 14 | 22,2 | 29,9 |
| 15 | 23,8 | 31,5 |
| 16 | 25,4 | 33,1 |
| 17 | 27,0 | 34,7 |
| 18 | 28,6 | 36,3 |
| 19 | 30,2 | 37,9 |
| 20 | 31,8 | 39,5 |
| 21 | 33,3 | 41,1 |
| 22 | 35,0 | 42,7 |
| 23 | 36,5 | 44,3 |
| 24 | 38,1 | 45,9 |

BTH1-17-08-2-Z

- SERIES
- CONNECTOR INTERFACE
- ANGLE
- SHELL SIZE (TABLE 1)
- ENTRY SIZE (TABLE 2)
- MATERIAL
  - NICKEL ALUMINIUM BRONZE
- FINISH
  - SHOT BLAST

**For tooling and assembly instructions see www.polamco.com**

Backshell supplied without Band (see page 349)
Sealing and strain relief achieved with Heat Shrink Boot (see page 354)
Adhesive if required for assembly (see page 352)
Screenbraid for EMC/RFI screening (see page 350)

DRAWING NOT TO SCALE, DIMENSIONS IN MM

SEE PAGES 18-26 FOR COMPLETE LIST OF AVAILABLE MATERIALS, FINISHES AND CONNECTOR INTERFACES
(DIMENSIONS, FORM AND O RING SUBJECT TO CHANGE DEPENDING ON BACKSHELL MATERIAL AND CONNECTOR INTERFACE)

THIS DRAWING IS THE PROPERTY OF POLAMCO LTD AND MUST NOT BE USED FOR COMMERCIAL PURPOSES WITHOUT WRITTEN CONSENT OF THE COMPANY

# XBTF1 - Band Termination Composite

## Interface F - MIL-DTL-38999 SERIES I

Polamco

**Interconnect Solutions Worldwide**

BAND TERMINATION

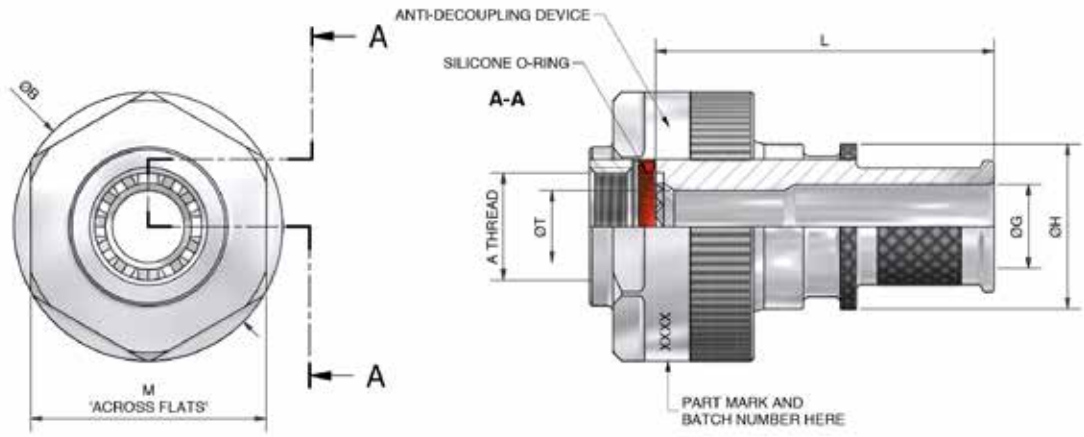


TABLE 1

| SHELL SIZE | A THREAD | ØB MAX | ØT MIN | M A/F |
|---|---|---|---|---|
| 09 | 7/16-28UNEF | 25,4 | 6,8 | 22,2 |
| 11 | 9/16-24UNEF | 26,6 | 10,2 | 22,2 |
| 13 | 11/16-24UNEF | 29,5 | 13,1 | 25,4 |
| 15 | 13/16-20UNEF | 32,6 | 16,2 | 28,6 |
| 17 | 15/16-20UNEF | 37,6 | 19,3 | 31,8 |
| 19 | 1 1/16-18UNEF | 40,8 | 22,3 | 35,1 |
| 21 | 1 3/16-18UNEF | 42,1 | 25,8 | 38,1 |
| 23 | 1 5/16-18UNEF | 45,2 | 28,3 | 41,3 |
| 25 | 1 7/16-18UNEF | 47,5 | 31,5 | 44,5 |

TABLE 2

| ENTRY SIZE | ØG MIN | ØH MAX |
|---|---|---|
| 03 | 4,7 | 13,9 |
| 04 | 6,3 | 13,9 |
| 05 | 7,9 | 15,5 |
| 06 | 9,5 | 17,2 |
| 07 | 11,1 | 18,7 |
| 08 | 12,7 | 20,3 |
| 09 | 14,2 | 21,9 |
| 10 | 15,8 | 23,5 |
| 11 | 17,4 | 25,1 |
| 12 | 19,0 | 26,7 |
| 13 | 20,6 | 28,3 |
| 14 | 22,2 | 29,9 |
| 15 | 23,8 | 31,5 |
| 16 | 25,4 | 33,1 |
| 17 | 27,0 | 34,7 |
| 18 | 28,6 | 36,3 |
| 19 | 30,2 | 37,9 |
| 20 | 31,8 | 39,5 |
| 21 | 33,3 | 41,1 |
| 22 | 35,0 | 42,7 |
| 23 | 36,5 | 44,3 |
| 24 | 38,1 | 45,9 |

TABLE 3

| CODE | MATERIAL / PLATING |
|---|---|
| 74-C | ULTEM / ELECTROLESS NICKEL |
| 74-B | ULTEM / CADMIUM OLIVE DRAB OVER ELECTROLESS NICKEL |
| 74-ZB | ULTEM / ZINC COBALT OLIVE DRAB OVER ELECTROLESS NICKEL |
| 74-ZN | ULTEM / ZINC NICKEL BLACK PASSIVATE OVER ELECTROLESS NICKEL |
| 74-U | ULTEM / UNPLATED |

LIST NOT EXHAUSTIVE, SEE PLATING TABLE FOR OTHER OPTIONS

XBTF1-15-08-74-C-TD-L40

SERIES
CONNECTOR INTERFACE
ANGLE
SHELL SIZE (TABLE 1)
ENTRY SIZE (TABLE 2)
MATERIAL
ULTEM 2300
FINISH (TABLE 3)
TORQUE DIFFERENTIAL ANTI-DECOUPLING
LENGTH CODE IN MM
OMIT FOR STANDARD 32,00 MM

**For tooling and assembly instructions see www.polamco.com**

Backshell supplied without Band (see page 349)
Sealing and strain relief achieved with Heat Shrink Boot (see page 354)
Adhesive if required for assembly (see page 352)
Screenbraid for EMC/RFI screening (see page 350)

DRAWING NOT TO SCALE, DIMENSIONS IN MM

SEE PAGES 18-26 FOR COMPLETE LIST OF AVAILABLE MATERIALS, FINISHES AND CONNECTOR INTERFACES
(DIMENSIONS, FORM AND O RING SUBJECT TO CHANGE DEPENDING ON BACKSHELL MATERIAL AND CONNECTOR INTERFACE)



THIS DRAWING IS THE PROPERTY OF POLAMCO LTD AND MUST NOT BE USED FOR COMMERCIAL PURPOSES WITHOUT WRITTEN CONSENT OF THE COMPANY

# XBTF1 - Band Termination Composite

## Interface F - MIL-DTL-38999 SERIES II

Polamco

**Interconnect Solutions Worldwide**



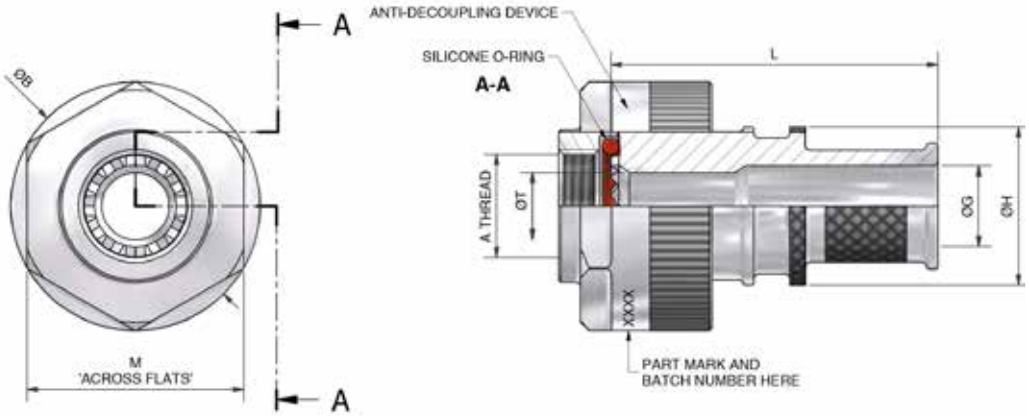


TABLE 1

| SHELL SIZE | A THREAD | ØB MAX | ØT MIN | M A/F |
|---|---|---|---|---|
| 08 | 7/16-28UNEF | 24,4 | 6,6 | 21,2 |
| 10 | 9/16-24UNEF | 25,6 | 10,1 | 21,2 |
| 12 | 11/16-24UNEF | 28,5 | 12,9 | 24,4 |
| 14 | 13/16-20UNEF | 31,6 | 16,1 | 27,6 |
| 16 | 15/16-20UNEF | 36,6 | 19,3 | 30,8 |
| 18 | 1 1/16-18UNEF | 39,8 | 21,7 | 34,1 |
| 20 | 1 3/16-18UNEF | 41,1 | 24,9 | 37,1 |
| 22 | 1 5/16-18UNEF | 44,2 | 28,1 | 40,3 |
| 24 | 1 7/16-18UNEF | 46,5 | 31,3 | 43,5 |

TABLE 2

| ENTRY SIZE | ØG MIN | ØH MAX |
|---|---|---|
| 03 | 4,7 | 13,9 |
| 04 | 6,3 | 13,9 |
| 05 | 7,9 | 15,5 |
| 06 | 9,5 | 17,2 |
| 07 | 11,1 | 18,7 |
| 08 | 12,7 | 20,3 |
| 09 | 14,2 | 21,9 |
| 10 | 15,8 | 23,5 |
| 11 | 17,4 | 25,1 |
| 12 | 19,0 | 26,7 |
| 13 | 20,6 | 28,3 |
| 14 | 22,2 | 29,9 |
| 15 | 23,8 | 31,5 |
| 16 | 25,4 | 33,1 |
| 17 | 27,0 | 34,7 |
| 18 | 28,6 | 36,3 |
| 19 | 30,2 | 37,9 |
| 20 | 31,8 | 39,5 |
| 21 | 33,3 | 41,1 |
| 22 | 35,0 | 42,7 |
| 23 | 36,5 | 44,3 |
| 24 | 38,1 | 45,9 |

TABLE 3

| CODE | MATERIAL / PLATING |
|---|---|
| 74-C | ULTEM / ELECTROLESS NICKEL |
| 74-B | ULTEM / CADMIUM OLIVE DRAB OVER ELECTROLESS NICKEL |
| 74-ZB | ULTEM / ZINC COBALT OLIVE DRAB OVER ELECTROLESS NICKEL |
| 74-ZN | ULTEM / ZINC NICKEL BLACK PASSIVATE OVER ELECTROLESS NICKEL |
| 74-U | ULTEM / UNPLATED |

LIST NOT EXHAUSTIVE, SEE PLATING TABLE FOR OTHER OPTIONS

XBTF1-14-08-74-C-TD-L40

- SERIES
- CONNECTOR INTERFACE
- ANGLE
- SHELL SIZE (TABLE 1)
- ENTRY SIZE (TABLE 2)
- MATERIAL
  - ULTEM 2300
- FINISH (TABLE 3)
- TORQUE DIFFERENTIAL ANTI-DECOUPLING
- LENGTH CODE IN MM
  - OMIT FOR STANDARD 32,00 MM

**For tooling and assembly instructions see www.polamco.com**

Backshell supplied without Band (see page 349)
Sealing and strain relief achieved with Heat Shrink Boot (see page 354)
Adhesive if required for assembly (see page 352)
Screenbraid for EMC/RFI screening (see page 350)

DRAWING NOT TO SCALE, DIMENSIONS IN MM

SEE PAGES 18-26 FOR COMPLETE LIST OF AVAILABLE MATERIALS, FINISHES AND CONNECTOR INTERFACES
(DIMENSIONS, FORM AND O RING SUBJECT TO CHANGE DEPENDING ON BACKSHELL MATERIAL AND CONNECTOR INTERFACE)

THIS DRAWING IS THE PROPERTY OF POLAMCO LTD AND MUST NOT BE USED FOR
COMMERCIAL PURPOSES WITHOUT WRITTEN CONSENT OF THE COMPANY

# XBTH1 - Band Termination Composite

## Interface H - MIL-DTL-38999 SERIES III & IV

Polamco

**Interconnect Solutions Worldwide**

BAND TERMINATION

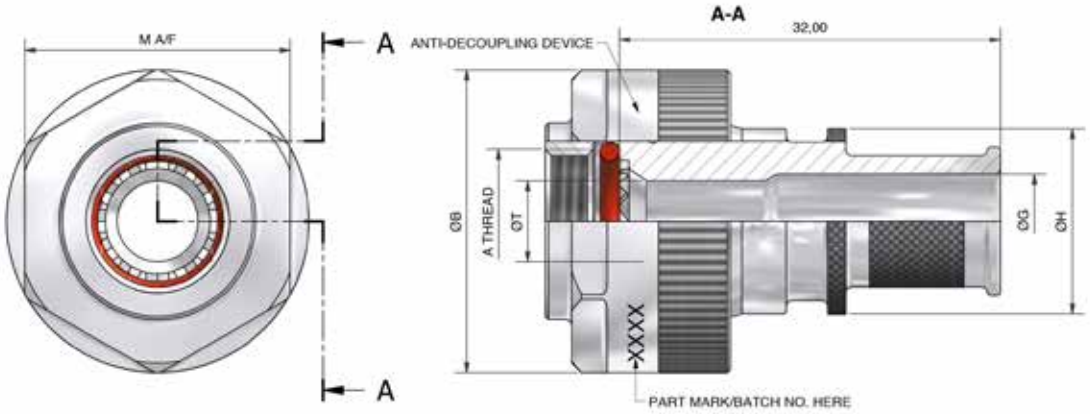


XBTH1-15-08-74-C-TD

- SERIES
- INTERFACE (H = MIL-DTL-38999 SERIES III & IV)
- ANGLE (1 = STRAIGHT)
- SHELL SIZE
- ENTRY SIZE
- MATERIAL (74 = ULTEM 2300)
- FINISH (SEE TABLE 3 FOR OPTIONS)
- TORQUE DIFFERENTIAL ANTI-DECOUPLING OPTION

| TABLE 1 | | | | |
|---|---|---|---|---|
| SHELL SIZE | A THREAD | B MAX | T MIN | M A/F |
| 09 | M12 x 1.0 | 25,4 | 6,7 | 22,2 |
| 11 | M15 x 1.0 | 26,6 | 10,2 | 22,2 |
| 13 | M18 x 1.0 | 29,5 | 13,5 | 25,4 |
| 15 | M22 x 1.0 | 32,6 | 16,2 | 28,6 |
| 17 | M25 x 1.0 | 37,6 | 19,4 | 31,8 |
| 19 | M28 x 1.0 | 40,8 | 21,8 | 35,1 |
| 21 | M31 x 1.0 | 42,1 | 25,1 | 38,1 |
| 23 | M34 x 1.0 | 45,2 | 28,2 | 41,3 |
| 25 | M37 x 1.0 | 47,5 | 31,4 | 44,5 |

| TABLE 2 | | |
|---|---|---|
| ENTRYSIZE | GMIN | HMAX |
| 03 | 4,7 | 13,9 |
| 04 | 6,3 | 13,9 |
| 05 | 7,9 | 15,5 |
| 06 | 9,5 | 17,2 |
| 07 | 11,1 | 18,7 |
| 08 | 12,7 | 20,3 |
| 09 | 14,2 | 21,9 |
| 10 | 15,8 | 23,5 |
| 11 | 17,4 | 25,1 |
| 12 | 19,0 | 26,7 |
| 13 | 20,6 | 28,3 |
| 14 | 22,2 | 29,9 |
| 15 | 23,8 | 31,5 |
| 16 | 25,4 | 33,1 |
| 17 | 27,0 | 34,7 |
| 18 | 28,6 | 36,3 |
| 19 | 30,2 | 37,9 |
| 20 | 31,8 | 39,5 |
| 21 | 33,3 | 41,1 |
| 22 | 35,0 | 42,7 |
| 23 | 36,5 | 44,3 |
| 24 | 38,1 | 45,9 |

| TABLE 3 | |
|---|---|
| CODE | MATERIAL / PLATING |
| 74-C | ULTEM / ELECTROLESS NICKEL |
| 74-B | ULTEM / CADMIUM OLIVE DRAB OVER ELECTROLESS NICKEL |
| 74-ZB | ULTEM / ZINC COBALT OLIVE DRAB OVER ELECTROLESS NICKEL |
| 74-ZN | ULTEM / ZINC NICKEL BLACK PASSIVATE OVER ELECTROLESS NICKEL |
| 74 - U | ULTEM / UNPLATED |

**For tooling and assembly instructions see www.polamco.com**

Backshell supplied without Band (see page 349)
Sealing and strain relief achieved with Heat Shrink Boot (see page 354)
Adhesive if required for assembly (see page 352)
Screenbraid for EMC/RFI screening (see page 350)

DRAWING NOT TO SCALE, DIMENSIONS IN MM

SEE PAGES 18-26 FOR COMPLETE LIST OF AVAILABLE MATERIALS, FINISHES AND CONNECTOR INTERFACES
(DIMENSIONS, FORM AND O RING SUBJECT TO CHANGE DEPENDING ON BACKSHELL MATERIAL AND CONNECTOR INTERFACE)



THIS DRAWING IS THE PROPERTY OF POLAMCO LTD AND MUST NOT BE USED FOR COMMERCIAL PURPOSES WITHOUT WRITTEN CONSENT OF THE COMPANY

# XBTH1-F - Band Termination Composite

## Interface H - MIL-DTL-38999 SERIES III & IV

Polamco

**Interconnect Solutions Worldwide**



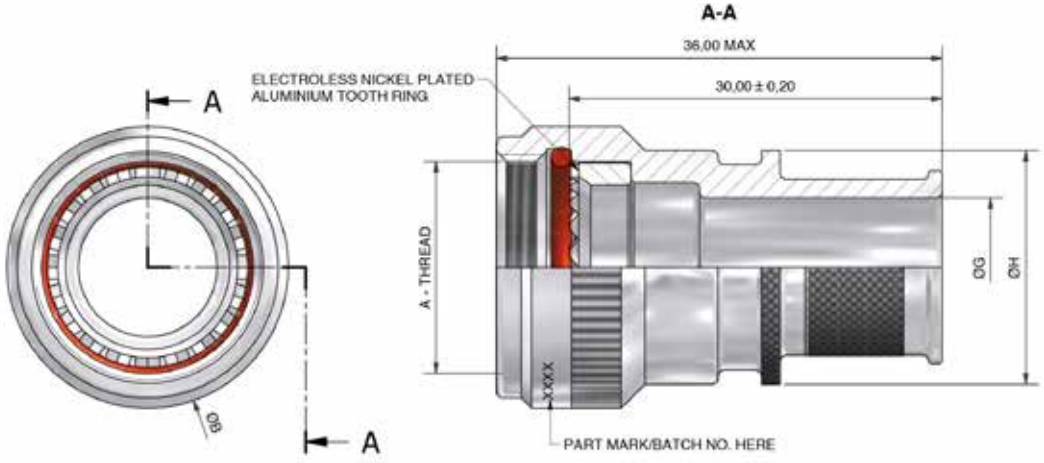


TABLE 1

| SHELL SIZE | A THREAD | B MAX |
|---|---|---|
| 09 | M12 x 1.0 | 16,5 |
| 11 | M15 x 1.0 | 19,6 |
| 13 | M18 x 1.0 | 22,6 |
| 15 | M22 x 1.0 | 26,2 |
| 17 | M25 x 1.0 | 29,2 |
| 19 | M28 x 1.0 | 32,5 |
| 21 | M31 x 1.0 | 35,8 |
| 23 | M34 x 1.0 | 38,9 |
| 25 | M37 x 1.0 | 42,2 |

TABLE 2

| ENTRYSIZE | GMIN | HMAX |
|---|---|---|
| 03 | 4,7 | 13,9 |
| 04 | 6,3 | 13,9 |
| 05 | 7,9 | 15,5 |
| 06 | 9,5 | 17,2 |
| 07 | 11,1 | 18,7 |
| 08 | 12,7 | 20,3 |
| 09 | 14,2 | 21,9 |
| 10 | 15,8 | 23,5 |
| 11 | 17,4 | 25,1 |
| 12 | 19,0 | 26,7 |
| 13 | 20,6 | 28,3 |
| 14 | 22,2 | 29,9 |
| 15 | 23,8 | 31,5 |
| 16 | 25,4 | 33,1 |
| 17 | 27,0 | 34,7 |
| 18 | 28,6 | 36,3 |
| 19 | 30,2 | 37,9 |
| 20 | 31,8 | 39,5 |
| 21 | 33,3 | 41,1 |
| 22 | 35,0 | 42,7 |
| 23 | 36,5 | 44,3 |
| 24 | 38,1 | 45,9 |

TABLE 3

| CODE | MATERIAL / PLATING |
|---|---|
| 74-C | ULTEM / ELECTROLESS NICKEL |
| 74-B | ULTEM / CADMIUM OLIVE DRAB OVER ELECTROLESS NICKEL |
| 74-ZB | ULTEM / ZINC COBALT OLIVE DRAB OVER ELECTROLESS NICKEL |
| 74-ZN | ULTEM / ZINC NICKEL BLACK PASSIVATE OVER ELECTROLESS NICKEL |
| 74 - U | ULTEM / UNPLATED |

LIST NOT EXHAUSTIVE, SEE PLATING TABLE FOR OTHER OPTIONS

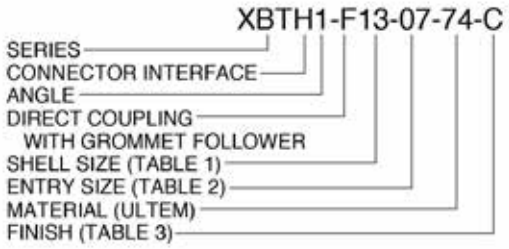


**For tooling and assembly instructions see www.polamco.com**

Backshell supplied without Band (see page 349)
Sealing and strain relief achieved with Heat Shrink Boot (see page 354)
Adhesive if required for assembly (see page 352)
Screenbraid for EMC/RFI screening (see page 350)

DRAWING NOT TO SCALE, DIMENSIONS IN MM

SEE PAGES 18-26 FOR COMPLETE LIST OF AVAILABLE MATERIALS, FINISHES AND CONNECTOR INTERFACES
(DIMENSIONS, FORM AND O RING SUBJECT TO CHANGE DEPENDING ON BACKSHELL MATERIAL AND CONNECTOR INTERFACE)

THIS DRAWING IS THE PROPERTY OF POLAMCO LTD AND MUST NOT BE USED FOR
COMMERCIAL PURPOSES WITHOUT WRITTEN CONSENT OF THE COMPANY

# BTF (AD) - Band Termination Anti-Decoupling

## Interface F - MIL-DTL-38999 SERIES I

Polamco

**Interconnect Solutions Worldwide**

BAND TERMINATION

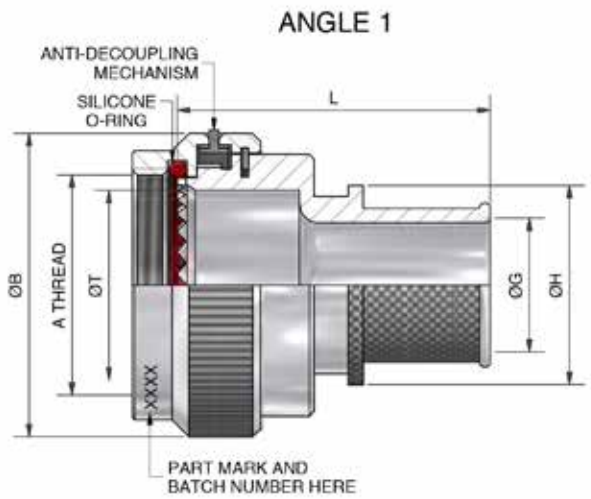


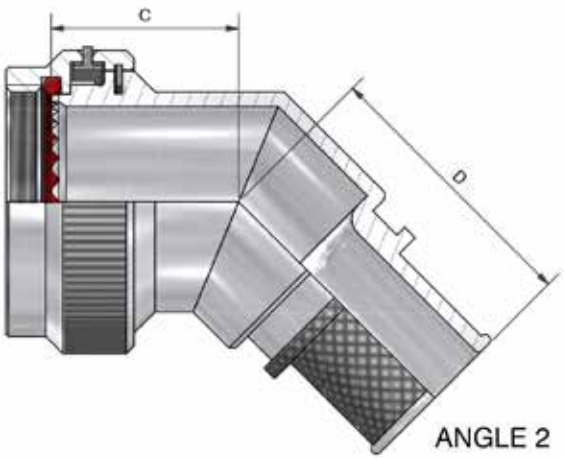


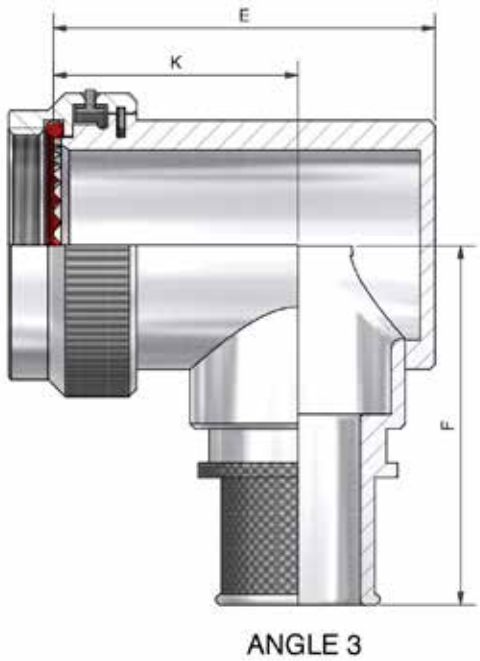


DRAWING NOT TO SCALE, DIMENSIONS IN MM

SEE PAGES 18-26 FOR COMPLETE LIST OF AVAILABLE MATERIALS, FINISHES AND CONNECTOR INTERFACES
(DIMENSIONS, FORM AND O RING SUBJECT TO CHANGE DEPENDING ON BACKSHELL MATERIAL AND CONNECTOR INTERFACE)



THIS DRAWING IS THE PROPERTY OF POLAMCO LTD AND MUST NOT BE USED FOR COMMERCIAL PURPOSES WITHOUT WRITTEN CONSENT OF THE COMPANY

# BTF (AD) - Band Termination Anti-Decoupling

## Interface F - MIL-DTL-38999 SERIES I

Polamco

**Interconnect Solutions Worldwide**



TABLE 1

| SHELL SIZE | A THREAD | ØB MAX | ØT MIN | C ± 0,5 | D ± 0,5 | E MAX | F MAX | K ± 0,5 | L ±0,25 |
|---|---|---|---|---|---|---|---|---|---|
| 08 | 7/16 - 28UNEF | 17,3 | 6,7 | 16,4 | 25,7 | 26,0 | 30,5 | 18,5 | 32,0 |
| 10 | 9/16 - 24UNEF | 20,3 | 10,2 | 17,2 | 26,9 | 29,5 | 32,2 | 20,5 | 32,0 |
| 12 | 11/16 - 24UNEF | 23,8 | 13,1 | 17,6 | 27,3 | 32,5 | 33,7 | 21,5 | 32,0 |
| 14 | 13/16 - 20UNEF | 26,8 | 16,2 | 18,5 | 28,2 | 35,5 | 35,2 | 23,5 | 32,0 |
| 16 | 15/16 - 20UNEF | 29,8 | 19,3 | 19,2 | 29,0 | 39,0 | 36,9 | 25,0 | 32,0 |
| 18 | 1 1/16 - 18UNEF | 33,3 | 22,3 | 19,6 | 29,3 | 43,0 | 38,5 | 26,5 | 32,0 |
| 20 | 1 3/16 - 18UNEF | 36,3 | 25,3 | 20,4 | 30,1 | 45,5 | 41,1 | 28,5 | 32,0 |
| 22 | 1 5/16 - 18UNEF | 39,8 | 28,4 | 20,8 | 30,5 | 48,5 | 41,6 | 29,5 | 32,0 |
| 24 | 1 7/16 - 18UNEF | 42,8 | 31,5 | 21,7 | 31,4 | 51,5 | 43,1 | 31,5 | 32,0 |

TABLE 2

| ENTRY SIZE | ØG MIN | ØH MAX |
|---|---|---|
| 03 | 4,7 | 13,9 |
| 04 | 6,3 | 13,9 |
| 05 | 7,9 | 15,5 |
| 06 | 9,5 | 17,2 |
| 07 | 11,1 | 18,7 |
| 08 | 12,7 | 20,3 |
| 09 | 14,2 | 21,9 |
| 10 | 15,8 | 23,5 |
| 11 | 17,4 | 25,1 |
| 12 | 19,0 | 26,7 |
| 13 | 20,6 | 28,3 |
| 14 | 22,2 | 29,9 |
| 15 | 23,8 | 31,5 |
| 16 | 25,4 | 33,1 |
| 17 | 27,0 | 34,7 |
| 18 | 28,6 | 36,3 |
| 19 | 30,2 | 37,9 |
| 20 | 31,8 | 39,5 |
| 21 | 33,3 | 41,1 |
| 22 | 35,0 | 42,7 |
| 23 | 36,5 | 44,3 |
| 24 | 38,1 | 45,9 |

TABLE 3

| CODE | FINISH |
|---|---|
| C | ELECTROLESS NICKEL |
| B | CADMIUM OLIVE DRAB OVER ELECTROLESS NICKEL |
| ZB | ZINC COBALT OLIVE DRAB OVER ELECTROLESS NICKEL |
| ZN | ZINC NICKEL BLACK PASSIVATE OVER ELECTROLESS NICKEL |

LIST NOT EXHAUSTIVE, SEE PLATING TABLE FOR OTHER OPTIONS

BTF1-16-08-1-B-AD-L50

- SERIES
- CONNECTOR INTERFACE
- ANGLE
- SHELL SIZE (TABLE 1)
- ENTRY SIZE (TABLE 2)
- MATERIAL
  - ALUMINIUM ALLOY
- FINISH (TABLE 3)
- ANTI-DECOUPLING
- OPTIONAL LENGTH (STRAIGHT ONLY)
  - IN MM - OMIT FOR STANDARD

**For tooling and assembly instructions see www.polamco.com**

Backshell supplied without Band (see page 349)
Sealing and strain relief achieved with Heat Shrink Boot (see page 354)
Adhesive if required for assembly (see page 352)
Screenbraid for EMC/RFI screening (see page 350)

DRAWING NOT TO SCALE, DIMENSIONS IN MM

SEE PAGES 18-26 FOR COMPLETE LIST OF AVAILABLE MATERIALS, FINISHES AND CONNECTOR INTERFACES
(DIMENSIONS, FORM AND O RING SUBJECT TO CHANGE DEPENDING ON BACKSHELL MATERIAL AND CONNECTOR INTERFACE)

THIS DRAWING IS THE PROPERTY OF POLAMCO LTD AND MUST NOT BE USED FOR COMMERCIAL PURPOSES WITHOUT WRITTEN CONSENT OF THE COMPANY

# BTF (AD) - Band Termination Anti-Decoupling

## Interface F - MIL-DTL-38999 SERIES II

Polamco

**Interconnect Solutions Worldwide**

BAND TERMINATION

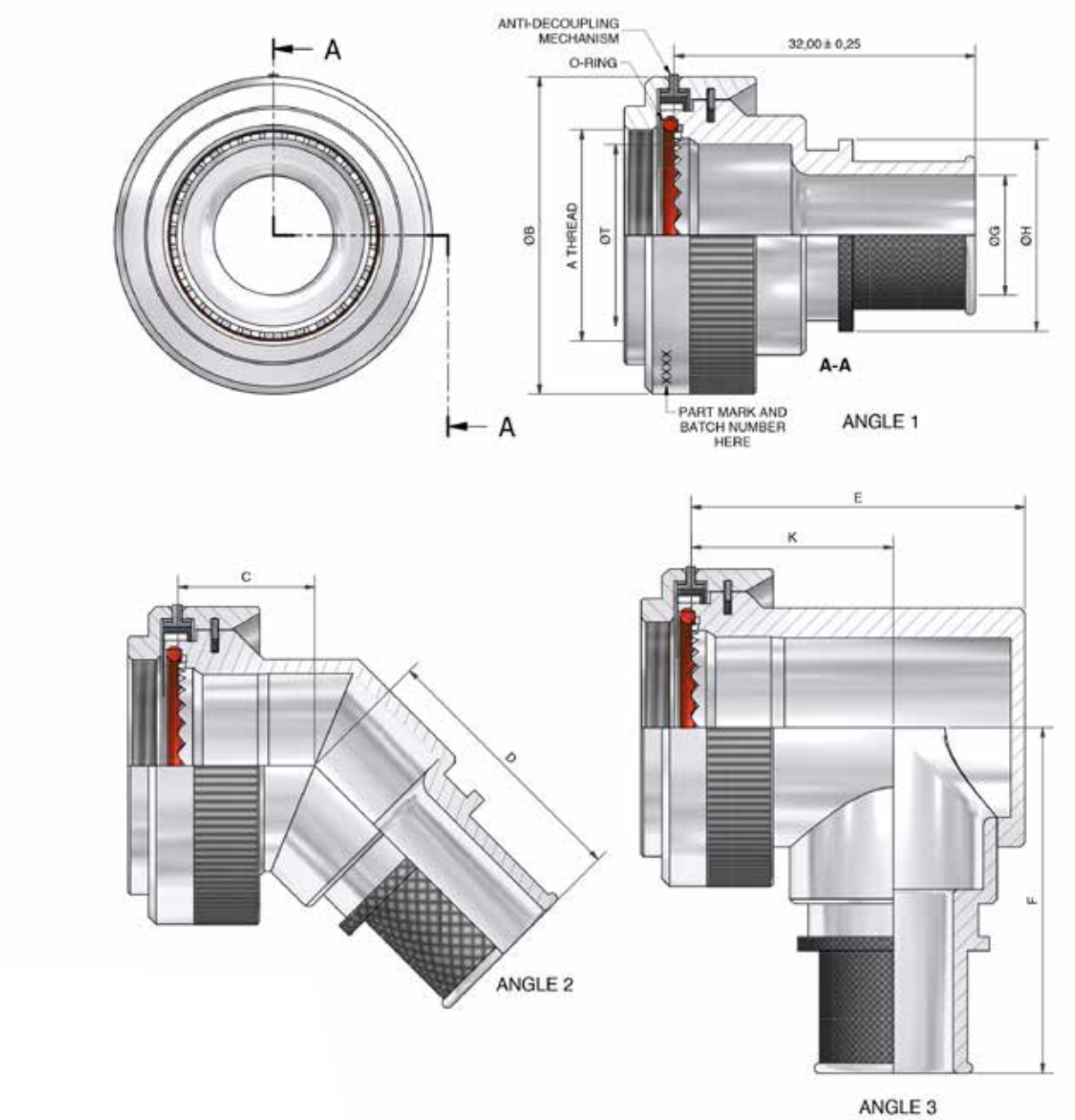


DRAWING NOT TO SCALE, DIMENSIONS IN MM

SEE PAGES 18-26 FOR COMPLETE LIST OF AVAILABLE MATERIALS, FINISHES AND CONNECTOR INTERFACES
(DIMENSIONS, FORM AND O RING SUBJECT TO CHANGE DEPENDING ON BACKSHELL MATERIAL AND CONNECTOR INTERFACE)



THIS DRAWING IS THE PROPERTY OF POLAMCO LTD AND MUST NOT BE USED FOR COMMERCIAL PURPOSES WITHOUT WRITTEN CONSENT OF THE COMPANY

# BTF (AD) - Band Termination Anti-Decoupling

## Interface F - MIL-DTL-38999 SERIES II

Polamco

**Interconnect Solutions Worldwide**



TABLE 1

| SHELL SIZE | A THREAD | ØB MAX | ØT MIN | C ±0,5 | D MAX | E MAX | F MAX | K ±0,5 |
|---|---|---|---|---|---|---|---|---|
| 09 | 7/16-28UNEF | 20,3 | 6,7 | 16,4 | 25,7 | 22,7 | 30,5 | 15,0 |
| 11 | 9/16-24UNEF | 23,9 | 10,2 | 17,2 | 26,9 | 26,2 | 32,2 | 17,0 |
| 13 | 11/16-24UNEF | 28,3 | 13,1 | 17,6 | 27,3 | 29,2 | 33,7 | 18,0 |
| 15 | 13/16-20UNEF | 31,3 | 16,0 | 18,5 | 28,2 | 32,2 | 35,2 | 20,0 |
| 17 | 15/16-20UNEF | 33,7 | 19,2 | 19,2 | 29,0 | 35,7 | 36,9 | 21,5 |
| 19 | 1 1/16-18UNEF | 36,0 | 21,7 | 19,6 | 29,3 | 39,7 | 38,5 | 23,0 |
| 21 | 1 3/16-18UNEF | 38,6 | 25,0 | 20,4 | 30,1 | 42,2 | 40,1 | 25,0 |
| 23 | 1 5/16-18UNEF | 42,0 | 28,3 | 20,8 | 30,5 | 45,2 | 41,6 | 26,0 |
| 25 | 1 7/16-18UNEF | 46,0 | 31,5 | 21,7 | 31,4 | 48,2 | 43,1 | 28,0 |

TABLE 2

| ENTRY SIZE | ØG MIN | ØH MAX |
|---|---|---|
| 03 | 4,7 | 13,9 |
| 04 | 6,3 | 13,9 |
| 05 | 7,9 | 15,5 |
| 06 | 9,5 | 17,2 |
| 07 | 11,1 | 18,7 |
| 08 | 12,7 | 20,3 |
| 09 | 14,2 | 21,9 |
| 10 | 15,8 | 23,5 |
| 11 | 17,4 | 25,1 |
| 12 | 19,0 | 26,7 |
| 13 | 20,6 | 28,3 |
| 14 | 22,2 | 29,9 |
| 15 | 23,8 | 31,5 |
| 16 | 25,4 | 33,1 |
| 17 | 27,0 | 34,7 |
| 18 | 28,6 | 36,3 |
| 19 | 30,2 | 37,9 |
| 20 | 31,8 | 39,5 |
| 21 | 33,3 | 41,1 |
| 22 | 35,0 | 42,7 |
| 23 | 36,5 | 44,3 |
| 24 | 38,1 | 45,9 |

TABLE 3

| CODE | FINISH |
|---|---|
| C | ELECTROLESS NICKEL |
| B | CADMIUM OLIVE DRAB OVER ELECTROLESS NICKEL |
| ZB | ZINC COBALT OLIVE DRAB OVER ELECTROLESS NICKEL |
| ZN | ZINC NICKEL BLACK PASSIVATE OVER ELECTROLESS NICKEL |

LIST NOT EXHAUSTIVE, SEE PLATING TABLE FOR OTHER OPTIONS

BTF1-17-08-1-B-AD

- SERIES
- CONNECTOR INTERFACE
- ANGLE
- SHELL SIZE (TABLE 1)
- ENTRY SIZE (TABLE 2)
- MATERIAL (ALUMINIUM ALLOY)
- FINISH (TABLE 3)
- ANTI-DECOUPLING

**For tooling and assembly instructions see www.polamco.com**

Backshell supplied without Band (see page 349)
Sealing and strain relief achieved with Heat Shrink Boot (see page 354)
Adhesive if required for assembly (see page 352)
Screenbraid for EMC/RFI screening (see page 350)

DRAWING NOT TO SCALE, DIMENSIONS IN MM

SEE PAGES 18-26 FOR COMPLETE LIST OF AVAILABLE MATERIALS, FINISHES AND CONNECTOR INTERFACES
(DIMENSIONS, FORM AND O RING SUBJECT TO CHANGE DEPENDING ON BACKSHELL MATERIAL AND CONNECTOR INTERFACE)

THIS DRAWING IS THE PROPERTY OF POLAMCO LTD AND MUST NOT BE USED FOR COMMERCIAL PURPOSES WITHOUT WRITTEN CONSENT OF THE COMPANY

# BTH (AD) - Band Termination Anti-Decoupling

## Interface H - MIL-DTL-38999 SERIES III & IV

Polamco

**Interconnect Solutions Worldwide**

BAND TERMINATION

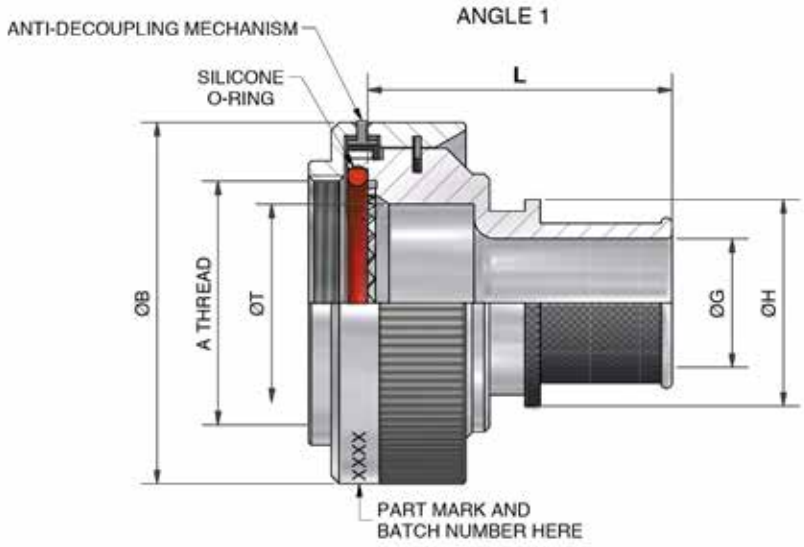


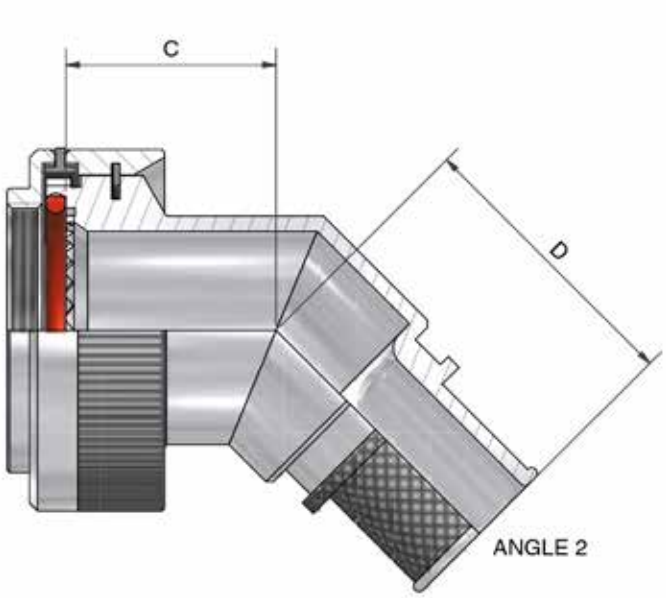


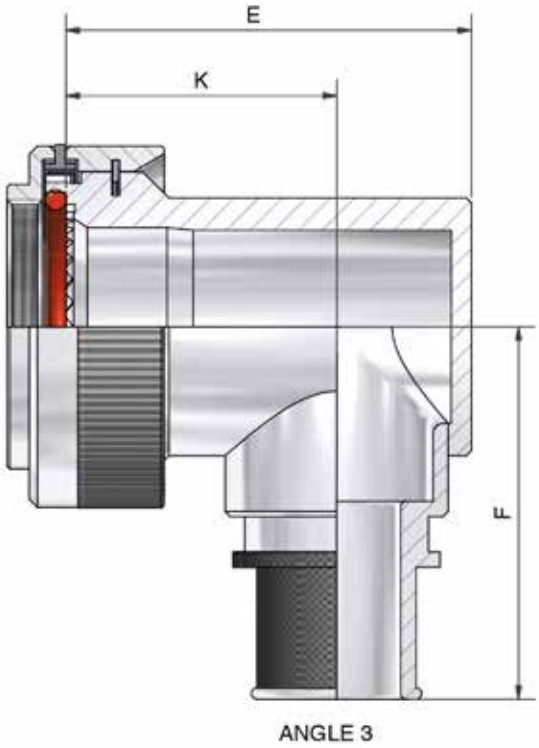


DRAWING NOT TO SCALE, DIMENSIONS IN MM

SEE PAGES 18-26 FOR COMPLETE LIST OF AVAILABLE MATERIALS, FINISHES AND CONNECTOR INTERFACES
(DIMENSIONS, FORM AND O RING SUBJECT TO CHANGE DEPENDING ON BACKSHELL MATERIAL AND CONNECTOR INTERFACE)



THIS DRAWING IS THE PROPERTY OF POLAMCO LTD AND MUST NOT BE USED FOR COMMERCIAL PURPOSES WITHOUT WRITTEN CONSENT OF THE COMPANY

# BTH (AD) - Band Termination Anti-Decoupling

## Interface H - MIL-DTL-38999 SERIES III & IV

Polamco

**Interconnect Solutions Worldwide**



TABLE 1

| SHELL SIZE | A THREAD | ØB MAX | ØT MIN | C MAX | D MAX | E MAX | F MAX | K ±0,5 | L ±0,25 |
|---|---|---|---|---|---|---|---|---|---|
| 09 | M12 x 1.0 | 21,5 | 6,7 | 18,6 | 24,7 | 25,5 | 30,5 | 17,5 | 32,0 |
| 11 | M15 x 1.0 | 24,6 | 10,2 | 19,2 | 25,9 | 26,5 | 32,2 | 17,5 | 32,0 |
| 13 | M18 x 1.0 | 28,3 | 13,5 | 19,8 | 26,3 | 31,0 | 33,7 | 20,0 | 32,0 |
| 15 | M22 x 1.0 | 32,4 | 16,2 | 20,2 | 27,2 | 37,0 | 35,2 | 24,5 | 32,0 |
| 17 | M25 x 1.0 | 35,6 | 19,4 | 21,0 | 28,0 | 40,0 | 36,9 | 26,7 | 32,0 |
| 19 | M28 x 1.0 | 38,5 | 21,8 | 21,3 | 28,3 | 44,5 | 38,5 | 27,0 | 32,0 |
| 21 | M31 x 1.0 | 41,7 | 25,1 | 22,0 | 29,6 | 49,0 | 40,1 | 30,5 | 32,0 |
| 23 | M34 x 1.0 | 43,9 | 28,2 | 22,7 | 29,5 | 51,5 | 41,6 | 31,5 | 32,0 |
| 25 | M37 x 1.0 | 47,0 | 31,4 | 23,3 | 30,4 | 53,0 | 43,1 | 28,5 | 32,0 |

TABLE 2

| ENTRY SIZE | ØG MIN | ØH MAX |
|---|---|---|
| 03 | 4,7 | 13,9 |
| 04 | 6,3 | 13,9 |
| 05 | 7,9 | 15,5 |
| 06 | 9,5 | 17,2 |
| 07 | 11,1 | 18,7 |
| 08 | 12,7 | 20,3 |
| 09 | 14,2 | 21,9 |
| 10 | 15,8 | 23,5 |
| 11 | 17,4 | 25,1 |
| 12 | 19,0 | 26,7 |
| 13 | 20,6 | 28,3 |
| 14 | 22,2 | 29,9 |
| 15 | 23,8 | 31,5 |
| 16 | 25,4 | 33,1 |
| 17 | 27,0 | 34,7 |
| 18 | 28,6 | 36,3 |
| 19 | 30,2 | 37,9 |
| 20 | 31,8 | 39,5 |
| 21 | 33,3 | 41,1 |
| 22 | 35,0 | 42,7 |
| 23 | 36,5 | 44,3 |
| 24 | 38,1 | 45,9 |

TABLE 3

| CODE | FINISH |
|---|---|
| C | ELECTROLESS NICKEL |
| B | CADMIUM OLIVE DRAB OVER ELECTROLESS NICKEL |
| ZB | ZINC COBALT OLIVE DRAB OVER ELECTROLESS NICKEL |
| ZN | ZINC NICKEL BLACK PASSIVATE OVER ELECTROLESS NICKEL |

LIST NOT EXHAUSTIVE, SEE PLATING TABLE FOR OTHER OPTIONS

BTH1-17-08-1-C-AD-L50

- SERIES
- CONNECTOR INTERFACE
- ANGLE
- SHELL SIZE (TABLE 1)
- ENTRY SIZE (TABLE 2)
- MATERIAL
  - ALUMINIUM ALLOY
- FINISH (TABLE 3)
- ANTI-DECOUPLING
- OPTIONAL LENGTH (STRAIGHT ONLY)
  - IN MM - OMIT FOR STANDARD

**For tooling and assembly instructions see www.polamco.com**

Backshell supplied without Band (see page 349)
Sealing and strain relief achieved with Heat Shrink Boot (see page 354)
Adhesive if required for assembly (see page 352)
Screenbraid for EMC/RFI screening (see page 350)

DRAWING NOT TO SCALE, DIMENSIONS IN MM

SEE PAGES 18-26 FOR COMPLETE LIST OF AVAILABLE MATERIALS, FINISHES AND CONNECTOR INTERFACES
(DIMENSIONS, FORM AND O RING SUBJECT TO CHANGE DEPENDING ON BACKSHELL MATERIAL AND CONNECTOR INTERFACE)

THIS DRAWING IS THE PROPERTY OF POLAMCO LTD AND MUST NOT BE USED FOR COMMERCIAL PURPOSES WITHOUT WRITTEN CONSENT OF THE COMPANY

# BTF3C - Band Termination Cobra Head

## Interface F - MIL-DTL-38999 SERIES I & II

Polamco

**Interconnect Solutions Worldwide**

BAND TERMINATION

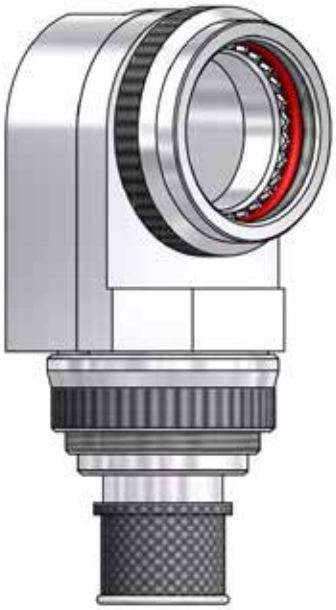

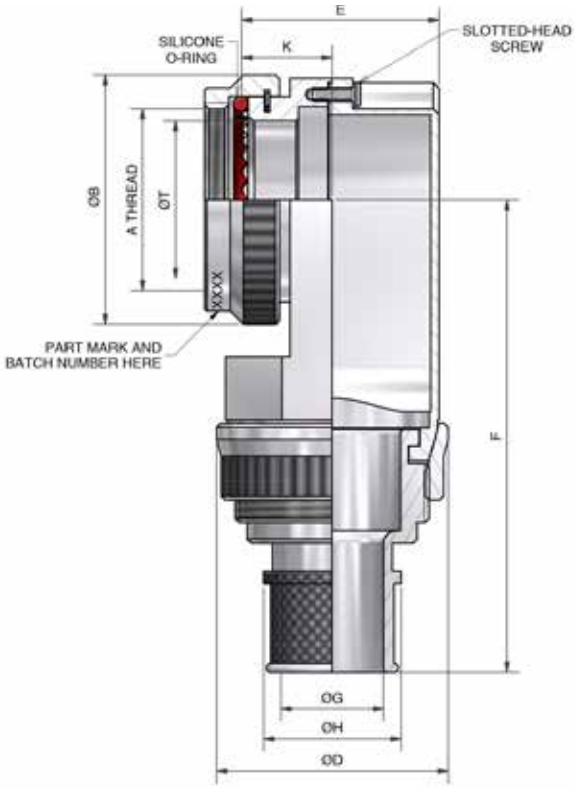


TABLE 1

| DASH NO. | SHELL SIZE SERIES I | SHELL SIZE SERIES II | A THREAD | ØB MAX | ØT MIN | ØD MAX | E MAX | F MAX | K +/-0,5 | MAX ENTRY |
|---|---|---|---|---|---|---|---|---|---|---|
| 08 | 09 | 08 | 7/16-28 UNEF | 18,3 | 6,6 | 18,7 | 17,7 | 48,6 | 8,7 | 04 |
| 10 | 11 | 10 | 9/16-24 UNEF | 21,5 | 10,1 | 21,7 | 19,0 | 52,7 | 8,7 | 06 |
| 12 | 13 | 12 | 11/16-24 UNEF | 24,5 | 12,9 | 24,7 | 22,1 | 52,7 | 8,7 | 08 |
| 14 | 15 | 14 | 13/16-20 UNEF | 27,8 | 16,1 | 24,7 | 22,1 | 56,5 | 10,2 | 08 |
| 16 | 17 | 16 | 15/16-20 UNEF | 30,8 | 19,3 | 28,7 | 25,1 | 58,8 | 11,2 | 10 |
| 18 | 19 | 18 | 1 1/16-18 UNEF | 34,1 | 21,7 | 28,7 | 25,1 | 61,5 | 11,2 | 10 |
| 20 | 21 | 20 | 1 3/16-18 UNEF | 37,3 | 24,9 | 28,7 | 25,1 | 62,5 | 11,2 | 10 |
| 22 | 23 | 22 | 1 5/16-18 UNEF | 40,5 | 28,1 | 31,7 | 28,1 | 65,0 | 12,7 | 12 |
| 24 | 25 | 24 | 1 7/16-18 UNEF | 43,7 | 31,3 | 31,7 | 28,1 | 66,5 | 12,7 | 12 |

TABLE 2

| ENTRY SIZE | ØG MIN | ØH MAX |
|---|---|---|
| 03 | 4,77 | 9,4 |
| 04 | 6,35 | 11,0 |
| 05 | 7,92 | 12,6 |
| 06 | 9,52 | 14,0 |
| 07 | 11,10 | 15,7 |
| 08 | 12,70 | 17,0 |
| 09 | 14,27 | 19,9 |
| 10 | 15,88 | 20,4 |
| 11 | 17,47 | 22,1 |
| 12 | 19,05 | 23,6 |

BTF3C-16-08-1-C

- SERIES
- CONNECTOR INTERFACE
- ANGLE (3 - 90°)
- COBRA HEAD STYLE
- DASH NO. (TABLE 1)
- ENTRY SIZE (TABLE 2)
- MATERIAL (TABLE 3)
- PLATING (TABLE 3)

TABLE 3

| CODE | MATERIAL / PLATING |
|---|---|
| 1-C | ALUMINIUM / ELECTROLESS NICKEL |
| 1-B | ALUMINIUM / CADMIUM OLIVE DRAB OVER ELECTROLESS NICKEL |
| 1-ZB | ALUMINIUM / ZINC COBALT OLIVE DRAB OVER ELECTROLESS NICKEL |
| 1-ZN | ALUMINIUM / ZINC NICKEL BLACK PASSIVATE OVER ELECTROLESS NICKEL |
| 4-J | STAINLESS STEEL / PASSIVATE |
| 2-Z | NICKEL ALUMINIUM BRONZE / SHOT BLAST NON REFLECTIVE |

LIST NOT EXHAUSTIVE, SEE PLATING TABLE FOR OTHER OPTIONS

**For tooling and assembly instructions see www.polamco.com**

Backshell supplied without Band (see page 349)
Sealing and strain relief achieved with Heat Shrink Boot (see page 354)
Adhesive if required for assembly (see page 352)
Screenbraid for EMC/RFI screening (see page 350)

DRAWING NOT TO SCALE, DIMENSIONS IN MM

SEE PAGES 18-26 FOR COMPLETE LIST OF AVAILABLE MATERIALS, FINISHES AND CONNECTOR INTERFACES
(DIMENSIONS, FORM AND O RING SUBJECT TO CHANGE DEPENDING ON BACKSHELL MATERIAL AND CONNECTOR INTERFACE)



THIS DRAWING IS THE PROPERTY OF POLAMCO LTD AND MUST NOT BE USED FOR COMMERCIAL PURPOSES WITHOUT WRITTEN CONSENT OF THE COMPANY

# BTH3C - Band Termination Cobra Head

## Interface H - MIL-DTL-38999 SERIES III & IV

Polamco

**Interconnect Solutions Worldwide**

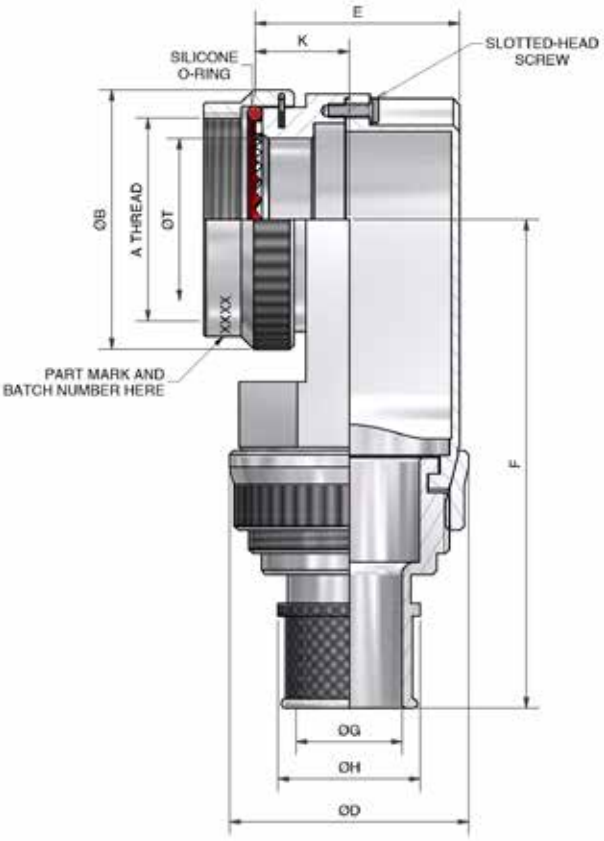


TABLE 1

| SHELL SIZE | A THREAD | ØB MAX | ØT MIN | ØD MAX | E MAX | F MAX | K +/-0,5 | MAX ENTRY |
|---|---|---|---|---|---|---|---|---|
| 09 | M12 x 1,0 | 18,0 | 6,7 | 18,7 | 17,7 | 48,6 | 8,7 | 04 |
| 11 | M15 x 1,0 | 21,0 | 10,2 | 21,7 | 19,0 | 52,7 | 8,7 | 06 |
| 13 | M18 x 1,0 | 24,5 | 13,5 | 24,7 | 22,1 | 52,7 | 8,7 | 08 |
| 15 | M22 x 1,0 | 27,5 | 16,2 | 24,7 | 22,1 | 56,5 | 10,2 | 08 |
| 17 | M25 x 1,0 | 31,0 | 19,4 | 28,7 | 25,1 | 58,8 | 11,2 | 10 |
| 19 | M28 x 1,0 | 34,0 | 21,8 | 28,7 | 25,1 | 61,5 | 11,2 | 10 |
| 21 | M31 x 1,0 | 37,0 | 25,1 | 28,7 | 25,1 | 62,5 | 11,2 | 10 |
| 23 | M34 x 1,0 | 40,0 | 28,2 | 31,7 | 28,1 | 65,0 | 12,7 | 12 |
| 25 | M37 x 1,0 | 43,5 | 31,4 | 31,7 | 28,1 | 66,5 | 12,7 | 12 |

TABLE 2

| ENTRY SIZE | ØG MIN | ØH MAX |
|---|---|---|
| 03 | 4,77 | 9,4 |
| 04 | 6,35 | 11,0 |
| 05 | 7,92 | 12,6 |
| 06 | 9,52 | 14,0 |
| 07 | 11,10 | 15,7 |
| 08 | 12,70 | 17,0 |
| 09 | 14,27 | 19,9 |
| 10 | 15,88 | 20,4 |
| 11 | 17,47 | 22,1 |
| 12 | 19,05 | 23,6 |

TABLE 3

| CODE | MATERIAL / PLATING |
|---|---|
| 1-C | ALUMINIUM / ELECTROLESS NICKEL |
| 1-B | ALUMINIUM / CADMIUM OLIVE DRAB OVER ELECTROLESS NICKEL |
| 1-ZB | ALUMINIUM / ZINC COBALT OLIVE DRAB OVER ELECTROLESS NICKEL |
| 1-ZN | ALUMINIUM / ZINC NICKEL BLACK PASSIVATE OVER ELECTROLESS NICKEL |
| 4-J | STAINLESS STEEL / PASSIVATE |
| 2-Z | NICKEL ALUMINIUM BRONZE / SHOT BLAST NON REFLECTIVE |

LIST NOT EXHAUSTIVE, SEE PLATING TABLE FOR OTHER OPTIONS

BTH3C-17-08-1-C

- SERIES
- CONNECTOR INTERFACE
- ANGLE (3 - 90°)
- COBRA HEAD STYLE
- SHELL SIZE (TABLE 1)
- ENTRY SIZE (TABLE 2)
- MATERIAL (TABLE 3)
- PLATING (TABLE 3)

**For tooling and assembly instructions see www.polamco.com**

Backshell supplied without Band (see page 349)
Sealing and strain relief achieved with Heat Shrink Boot (see page 354)
Adhesive if required for assembly (see page 352)
Screenbraid for EMC/RFI screening (see page 350)

DRAWING NOT TO SCALE, DIMENSIONS IN MM

SEE PAGES 18-26 FOR COMPLETE LIST OF AVAILABLE MATERIALS, FINISHES AND CONNECTOR INTERFACES
(DIMENSIONS, FORM AND O RING SUBJECT TO CHANGE DEPENDING ON BACKSHELL MATERIAL AND CONNECTOR INTERFACE)

THIS DRAWING IS THE PROPERTY OF POLAMCO LTD AND MUST NOT BE USED FOR COMMERCIAL PURPOSES WITHOUT WRITTEN CONSENT OF THE COMPANY

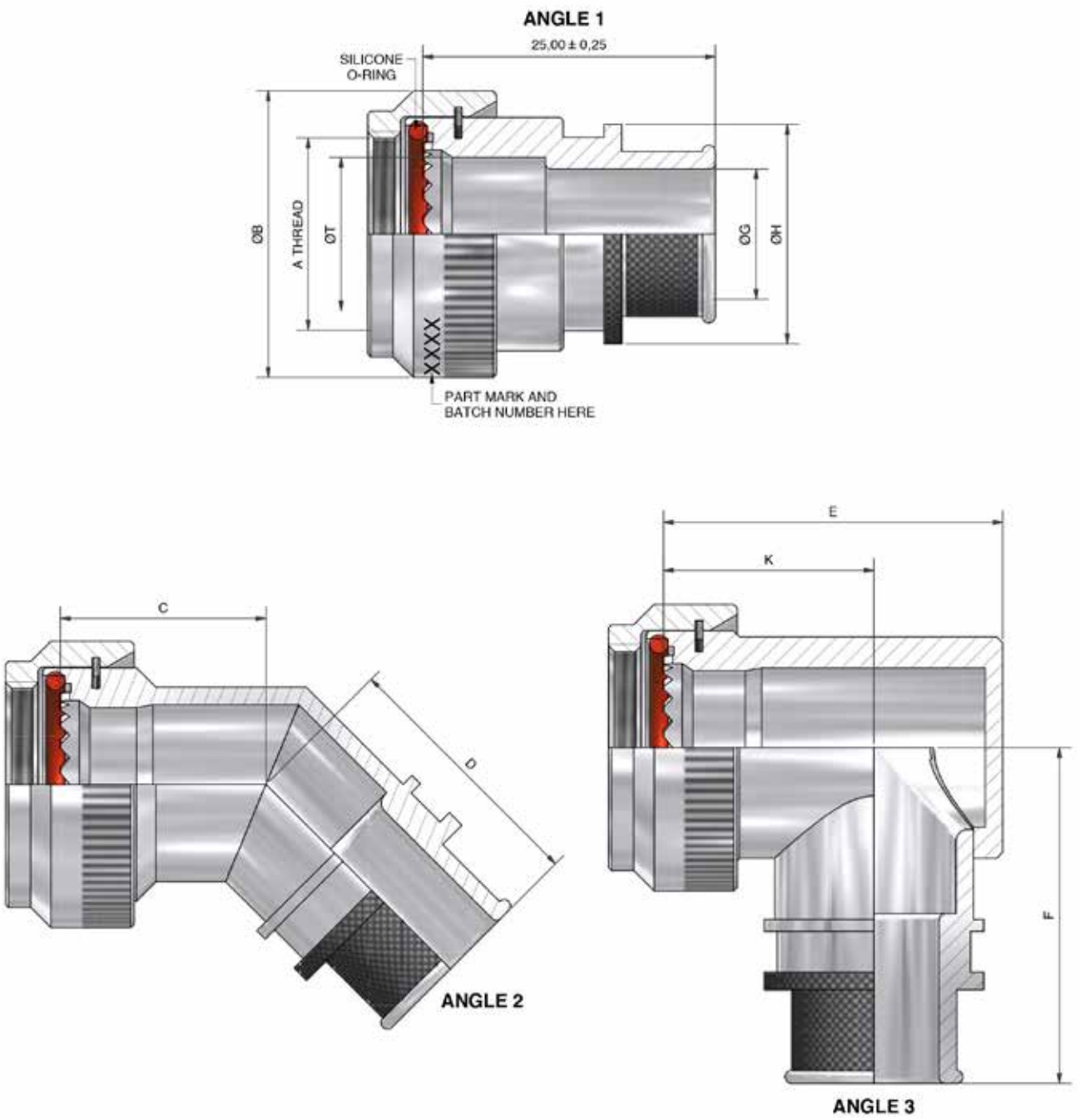


DRAWING NOT TO SCALE, DIMENSIONS IN MM

SEE PAGES 18-26 FOR COMPLETE LIST OF AVAILABLE MATERIALS, FINISHES AND CONNECTOR INTERFACES
(DIMENSIONS, FORM AND O RING SUBJECT TO CHANGE DEPENDING ON BACKSHELL MATERIAL AND CONNECTOR INTERFACE)




THIS DRAWING IS THE PROPERTY OF POLAMCO LTD AND MUST NOT BE USED FOR COMMERCIAL PURPOSES WITHOUT WRITTEN CONSENT OF THE COMPANY

TABLE 1

| SHELL SIZE | A THREAD | ØB MAX | ØT MIN | C ±0,5 | D MAX | E MAX | F MAX | K ±0,5 |
|---|---|---|---|---|---|---|---|---|
| 09 | 7/16-28 UNEF | 18,0 | 6,8 | 16,4 | 20,7 | 22,7 | 25,5 | 15,0 |
| 11 | 9/16-24 UNEF | 21,0 | 10,2 | 17,2 | 21,9 | 26,2 | 27,2 | 17,0 |
| 13 | 11/16-24 UNEF | 24,5 | 13,1 | 17,6 | 22,3 | 29,2 | 28,7 | 18,0 |
| 15 | 13/16-20 UNEF | 27,8 | 16,2 | 18,5 | 23,2 | 32,2 | 30,2 | 20,0 |
| 17 | 15/16-20 UNEF | 30,8 | 19,3 | 19,2 | 24,0 | 35,7 | 31,9 | 21,5 |
| 19 | 1 1/16-18 UNEF | 34,1 | 22,3 | 19,6 | 24,3 | 39,7 | 33,5 | 23,0 |
| 21 | 1 3/16-18 UNEF | 37,3 | 25,8 | 20,4 | 25,1 | 42,2 | 36,1 | 25,0 |
| 23 | 1 5/16-18 UNEF | 41,0 | 28,3 | 20,8 | 25,5 | 45,2 | 36,6 | 26,0 |
| 25 | 1 7/16-18 UNEF | 43,7 | 31,5 | 21,7 | 26,4 | 48,2 | 38,1 | 28,0 |

TABLE 2

| ENTRY SIZE | ØG MIN | ØH MAX |
|---|---|---|
| 03 | 4,7 | 13,9 |
| 04 | 6,3 | 13,9 |
| 05 | 7,9 | 15,5 |
| 06 | 9,5 | 17,2 |
| 07 | 11,1 | 18,7 |
| 08 | 12,7 | 20,3 |
| 09 | 14,2 | 21,9 |
| 10 | 15,8 | 23,5 |
| 11 | 17,4 | 25,1 |
| 12 | 19,0 | 26,7 |
| 13 | 20,6 | 28,3 |
| 14 | 22,2 | 29,9 |
| 15 | 23,8 | 31,5 |
| 16 | 25,4 | 33,1 |
| 17 | 27,0 | 34,7 |
| 18 | 28,6 | 36,3 |
| 19 | 30,2 | 37,9 |
| 20 | 31,8 | 39,5 |
| 21 | 33,3 | 41,1 |
| 22 | 35,0 | 42,7 |
| 23 | 36,5 | 44,3 |
| 24 | 38,1 | 45,9 |

TABLE 3

| CODE | MATERIAL / PLATING |
|---|---|
| 1-C | ALUMINIUM / ELECTROLESS NICKEL |
| 1-B | ALUMINIUM / CADMIUM OLIVE DRAB OVER ELECTROLESS NICKEL |
| 1-ZB | ALUMINIUM / ZINC COBALT OLIVE DRAB OVER ELECTROLESS NICKEL |
| 1-ZN | ALUMINIUM / ZINC NICKEL BLACK PASSIVATE OVER ELECTROLESS NICKEL |

LIST NOT EXHAUSTIVE, SEE PLATING TABLE FOR OTHER OPTIONS

MBF1-13-07-1-C

SERIES
CONNECTOR INTERFACE
ANGLE
SHELL SIZE (TABLE 1)
ENTRY SIZE (TABLE 2)
MATERIAL
ALUMINIUM ALLOY
FINISH (TABLE 3)

**For tooling and assembly instructions see www.polamco.com**

Backshell supplied without Band (see page 349)
Sealing and strain relief achieved with Heat Shrink Boot (see page 354)
Adhesive if required for assembly (see page 352)
Screenbraid for EMC/RFI screening (see page 350)

DRAWING NOT TO SCALE, DIMENSIONS IN MM

SEE PAGES 18-26 FOR COMPLETE LIST OF AVAILABLE MATERIALS, FINISHES AND CONNECTOR INTERFACES
(DIMENSIONS, FORM AND O RING SUBJECT TO CHANGE DEPENDING ON BACKSHELL MATERIAL AND CONNECTOR INTERFACE)


THIS DRAWING IS THE PROPERTY OF POLAMCO LTD AND MUST NOT BE USED FOR COMMERCIAL PURPOSES WITHOUT WRITTEN CONSENT OF THE COMPANY

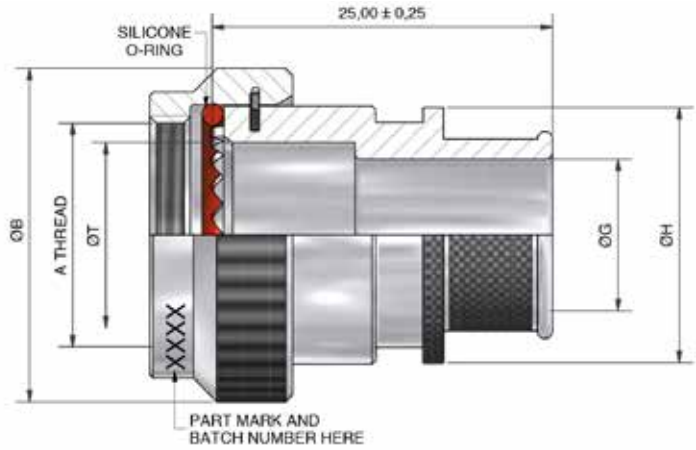


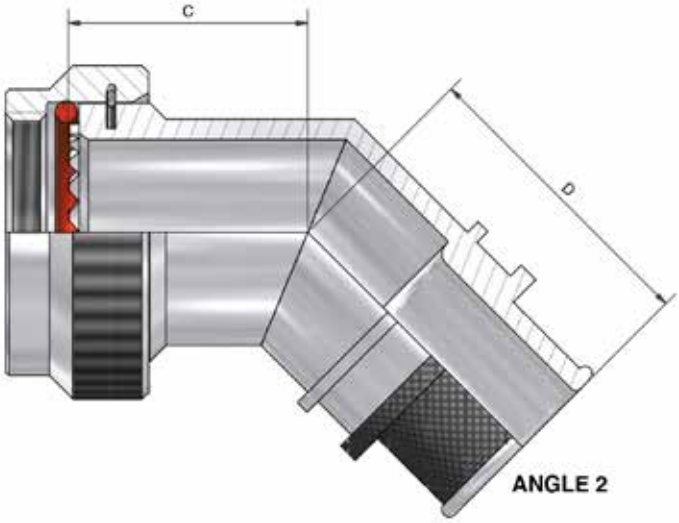


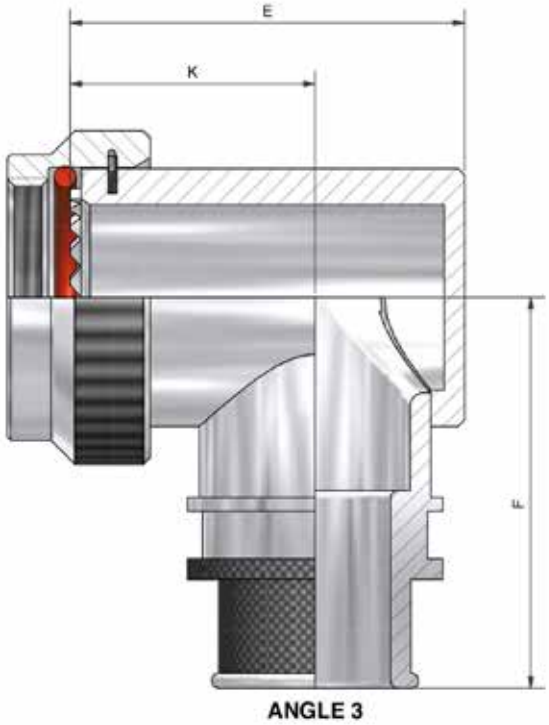


DRAWING NOT TO SCALE, DIMENSIONS IN MM

SEE PAGES 18-26 FOR COMPLETE LIST OF AVAILABLE MATERIALS, FINISHES AND CONNECTOR INTERFACES
(DIMENSIONS, FORM AND O RING SUBJECT TO CHANGE DEPENDING ON BACKSHELL MATERIAL AND CONNECTOR INTERFACE)




THIS DRAWING IS THE PROPERTY OF POLAMCO LTD AND MUST NOT BE USED FOR COMMERCIAL PURPOSES WITHOUT WRITTEN CONSENT OF THE COMPANY

TABLE 1

| SHELL SIZE | A THREAD | ØB MAX | ØT MIN | C ±0,5 | D MAX | E MAX | F MAX | K ±0,5 |
|---|---|---|---|---|---|---|---|---|
| 08 | 7/16-28 UNEF | 18,3 | 6,6 | 16,4 | 20,7 | 22,7 | 25,5 | 15,0 |
| 10 | 9/16-24 UNEF | 21,5 | 10,1 | 17,2 | 21,9 | 26,2 | 27,2 | 17,0 |
| 12 | 11/16-24 UNEF | 24,5 | 12,9 | 17,6 | 22,3 | 29,2 | 28,7 | 18,0 |
| 14 | 13/16-20 UNEF | 27,8 | 16,1 | 18,5 | 23,2 | 32,2 | 30,2 | 20,0 |
| 16 | 15/16-20 UNEF | 30,8 | 19,3 | 19,2 | 24,0 | 35,7 | 31,9 | 21,5 |
| 18 | 1 1/16-18 UNEF | 34,1 | 21,7 | 19,6 | 24,3 | 39,7 | 33,5 | 23,0 |
| 20 | 1 3/16-18 UNEF | 37,3 | 24,9 | 20,4 | 25,1 | 42,2 | 36,1 | 25,0 |
| 22 | 1 5/16-18 UNEF | 40,5 | 28,1 | 20,8 | 25,5 | 45,2 | 36,6 | 26,0 |
| 24 | 1 7/16-18 UNEF | 43,7 | 31,3 | 21,7 | 26,4 | 48,2 | 38,1 | 28,0 |

TABLE 2

| ENTRY SIZE | ØG MIN | ØH MAX |
|---|---|---|
| 03 | 4,7 | 13,9 |
| 04 | 6,3 | 13,9 |
| 05 | 7,9 | 15,5 |
| 06 | 9,5 | 17,2 |
| 07 | 11,1 | 18,7 |
| 08 | 12,7 | 20,3 |
| 09 | 14,2 | 21,9 |
| 10 | 15,8 | 23,5 |
| 11 | 17,4 | 25,1 |
| 12 | 19,0 | 26,7 |
| 13 | 20,6 | 28,3 |
| 14 | 22,2 | 29,9 |
| 15 | 23,8 | 31,5 |
| 16 | 25,4 | 33,1 |
| 17 | 27,0 | 34,7 |
| 18 | 28,6 | 36,3 |
| 19 | 30,2 | 37,9 |
| 20 | 31,8 | 39,5 |
| 21 | 33,3 | 41,1 |
| 22 | 35,0 | 42,7 |
| 23 | 36,5 | 44,3 |
| 24 | 38,1 | 45,9 |

TABLE 3

| CODE | MATERIAL / PLATING |
|---|---|
| 1-C | ALUMINIUM / ELECTROLESS NICKEL |
| 1-B | ALUMINIUM / CADMIUM OLIVE DRAB OVER ELECTROLESS NICKEL |
| 1-ZB | ALUMINIUM / ZINC COBALT OLIVE DRAB OVER ELECTROLESS NICKEL |
| 1-ZN | ALUMINIUM / ZINC NICKEL BLACK PASSIVATE OVER ELECTROLESS NICKEL |

LIST NOT EXHAUSTIVE, SEE PLATING TABLE FOR OTHER OPTIONS

MBF1-12-07-1-C

- SERIES
- CONNECTOR INTERFACE
- ANGLE
- SHELL SIZE (TABLE 1)
- ENTRY SIZE (TABLE 2)
- MATERIAL
  - ALUMINIUM ALLOY
- FINISH (TABLE 3)

**For tooling and assembly instructions see www.polamco.com**

Backshell supplied without Band (see page 349)
Sealing and strain relief achieved with Heat Shrink Boot (see page 354)
Adhesive if required for assembly (see page 352)
Screenbraid for EMC/RFI screening (see page 350)

DRAWING NOT TO SCALE, DIMENSIONS IN MM

SEE PAGES 18-26 FOR COMPLETE LIST OF AVAILABLE MATERIALS, FINISHES AND CONNECTOR INTERFACES
(DIMENSIONS, FORM AND O RING SUBJECT TO CHANGE DEPENDING ON BACKSHELL MATERIAL AND CONNECTOR INTERFACE)


THIS DRAWING IS THE PROPERTY OF POLAMCO LTD AND MUST NOT BE USED FOR COMMERCIAL PURPOSES WITHOUT WRITTEN CONSENT OF THE COMPANY

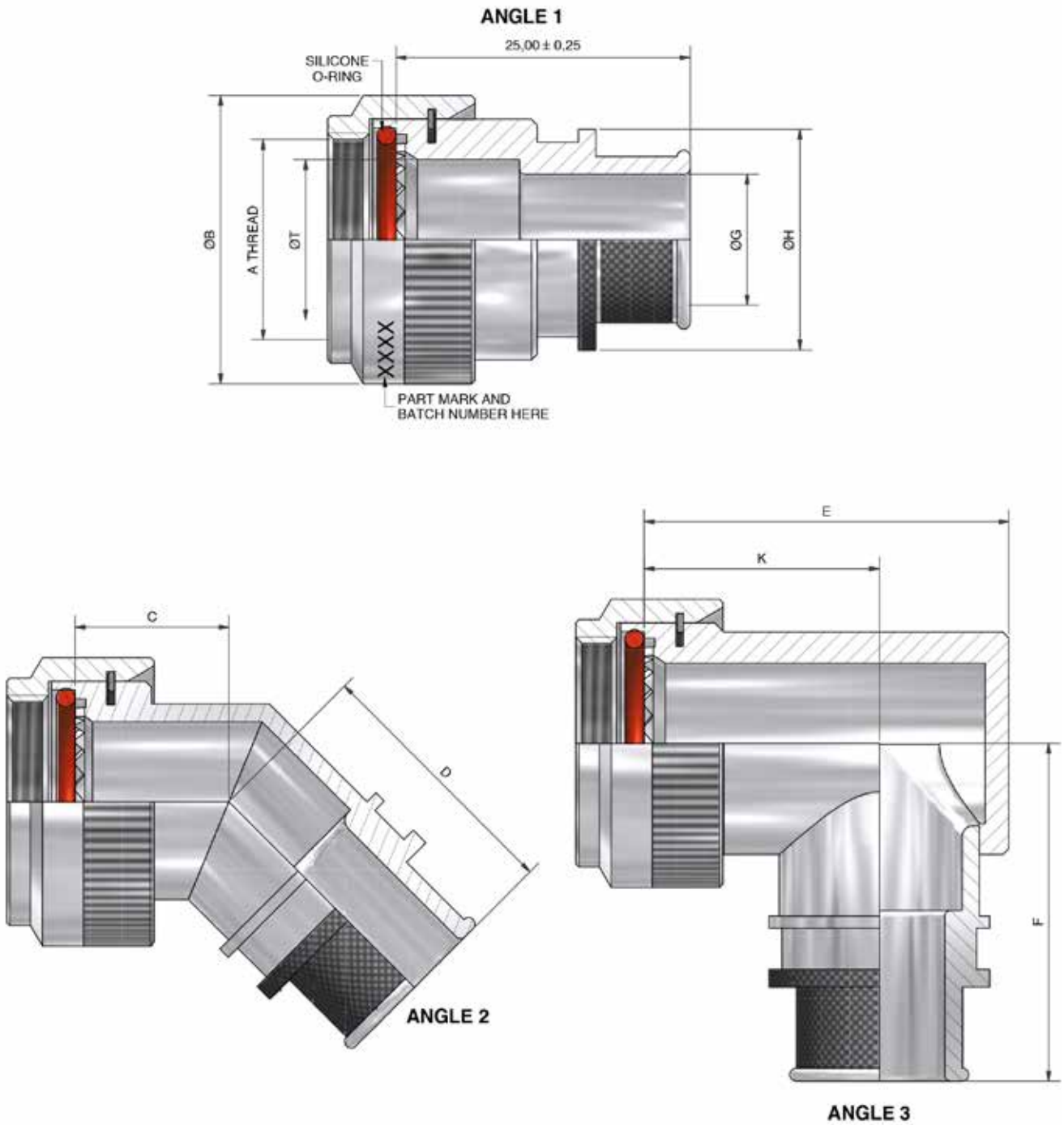


DRAWING NOT TO SCALE, DIMENSIONS IN MM

SEE PAGES 18-26 FOR COMPLETE LIST OF AVAILABLE MATERIALS, FINISHES AND CONNECTOR INTERFACES
(DIMENSIONS, FORM AND O RING SUBJECT TO CHANGE DEPENDING ON BACKSHELL MATERIAL AND CONNECTOR INTERFACE)




THIS DRAWING IS THE PROPERTY OF POLAMCO LTD AND MUST NOT BE USED FOR COMMERCIAL PURPOSES WITHOUT WRITTEN CONSENT OF THE COMPANY

TABLE 1

| SHELL SIZE | A THREAD | ØB MAX | ØT MIN | C ±0,5 | D MAX | E MAX | F MAX | K ±0,5 |
|---|---|---|---|---|---|---|---|---|
| 09 | M12x1.0 | 18,0 | 6,7 | 13,1 | 20,7 | 25,7 | 25,5 | 17,5 |
| 11 | M15x1.0 | 21,0 | 10,2 | 13,9 | 21,9 | 26,7 | 27,2 | 17,5 |
| 13 | M18x1.0 | 24,5 | 13,5 | 14,5 | 22,3 | 31,2 | 28,7 | 20,0 |
| 15 | M22x1.0 | 29,0 | 16,2 | 15,5 | 23,2 | 37,2 | 30,2 | 24,5 |
| 17 | M25x1.0 | 32,5 | 19,4 | 16,1 | 24,0 | 40,2 | 31,9 | 26,7 |
| 19 | M28x1.0 | 35,5 | 21,8 | 16,8 | 24,3 | 44,7 | 33,5 | 27,0 |
| 21 | M31x1.0 | 37,0 | 25,1 | 17,1 | 25,1 | 49,2 | 36,1 | 30,5 |
| 23 | M34x1.0 | 40,0 | 28,2 | 17,7 | 25,5 | 51,7 | 36,6 | 31,5 |
| 25 | M37x1.0 | 43,5 | 31,4 | 18,4 | 26,4 | 53,2 | 38,1 | 28,5 |

TABLE 2

| ENTRY SIZE | ØG MIN | ØH MAX |
|---|---|---|
| 03 | 4,7 | 13,9 |
| 04 | 6,3 | 13,9 |
| 05 | 7,9 | 15,5 |
| 06 | 9,5 | 17,2 |
| 07 | 11,1 | 18,7 |
| 08 | 12,7 | 20,3 |
| 09 | 14,2 | 21,9 |
| 10 | 15,8 | 23,5 |
| 11 | 17,4 | 25,1 |
| 12 | 19,0 | 26,7 |
| 13 | 20,6 | 28,3 |
| 14 | 22,2 | 29,9 |
| 15 | 23,8 | 31,5 |
| 16 | 25,4 | 33,1 |
| 17 | 27,0 | 34,7 |
| 18 | 28,6 | 36,3 |
| 19 | 30,2 | 37,9 |
| 20 | 31,8 | 39,5 |
| 21 | 33,3 | 41,1 |
| 22 | 35,0 | 42,7 |
| 23 | 36,5 | 44,3 |
| 24 | 38,1 | 45,9 |

TABLE 3

| CODE | MATERIAL / PLATING |
|---|---|
| 1-C | ALUMINIUM / ELECTROLESS NICKEL |
| 1-B | ALUMINIUM / CADMIUM OLIVE DRAB OVER ELECTROLESS NICKEL |
| 1-ZB | ALUMINIUM / ZINC COBALT OLIVE DRAB OVER ELECTROLESS NICKEL |
| 1-ZN | ALUMINIUM / ZINC NICKEL BLACK PASSIVATE OVER ELECTROLESS NICKEL |

LIST NOT EXHAUSTIVE, SEE PLATING TABLE FOR OTHER OPTIONS

MBH1-13-07-1-C

- SERIES
- CONNECTOR INTERFACE
- ANGLE
- SHELL SIZE (TABLE 1)
- ENTRY SIZE (TABLE 2)
- MATERIAL
  - ALUMINIUM ALLOY
- FINISH (TABLE 3)

**For tooling and assembly instructions see www.polamco.com**

Backshell supplied without Band (see page 349)
Sealing and strain relief achieved with Heat Shrink Boot (see page 354)
Adhesive if required for assembly (see page 352)
Screenbraid for EMC/RFI screening (see page 350)

DRAWING NOT TO SCALE, DIMENSIONS IN MM

SEE PAGES 18-26 FOR COMPLETE LIST OF AVAILABLE MATERIALS, FINISHES AND CONNECTOR INTERFACES
(DIMENSIONS, FORM AND O RING SUBJECT TO CHANGE DEPENDING ON BACKSHELL MATERIAL AND CONNECTOR INTERFACE)


THIS DRAWING IS THE PROPERTY OF POLAMCO LTD AND MUST NOT BE USED FOR COMMERCIAL PURPOSES WITHOUT WRITTEN CONSENT OF THE COMPANY

# DBF - Double Band Termination

## Interface F - MIL-DTL-38999 SERIES I

Polamco

**Interconnect Solutions Worldwide**

BAND TERMINATION

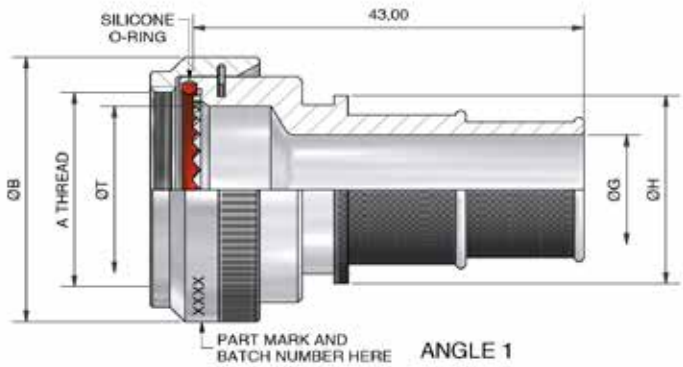


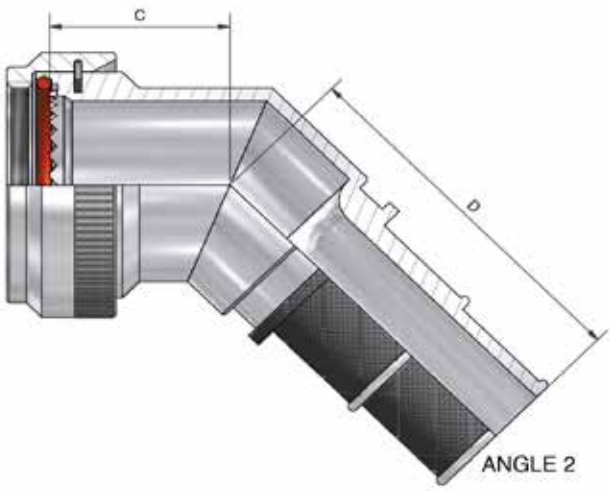


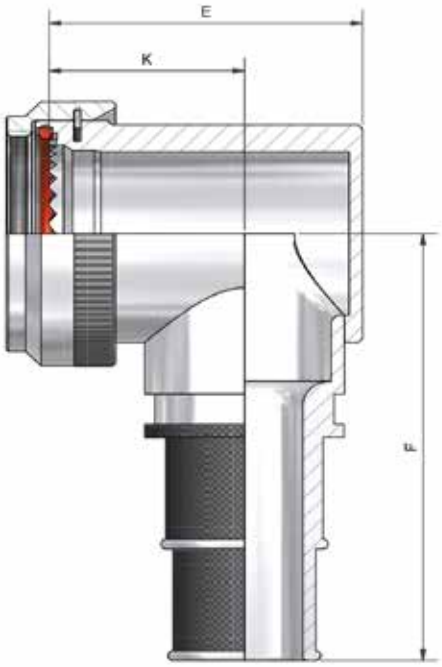


DRAWING NOT TO SCALE, DIMENSIONS IN MM

SEE PAGES 18-26 FOR COMPLETE LIST OF AVAILABLE MATERIALS, FINISHES AND CONNECTOR INTERFACES
(DIMENSIONS, FORM AND O RING SUBJECT TO CHANGE DEPENDING ON BACKSHELL MATERIAL AND CONNECTOR INTERFACE)



THIS DRAWING IS THE PROPERTY OF POLAMCO LTD AND MUST NOT BE USED FOR COMMERCIAL PURPOSES WITHOUT WRITTEN CONSENT OF THE COMPANY

# DBF - Double Band Termination

## Interface F - MIL-DTL-38999 SERIES I

Polamco

**Interconnect Solutions Worldwide**



TABLE 1

| SHELL SIZE | A THREAD | ØB MAX | ØT MIN | C ± 0,5 | D MAX | E MAX | F MAX | K ±0,5 |
|---|---|---|---|---|---|---|---|---|
| 09 | 7/16-28UNEF | 18,0 | 6,8 | 16,4 | 37,7 | 22,7 | 43,5 | 15,0 |
| 11 | 9/16-24UNEF | 21,0 | 10,2 | 17,2 | 38,9 | 26,2 | 45,2 | 17,0 |
| 13 | 11/16-24UNEF | 24,5 | 13,1 | 17,6 | 39,3 | 29,2 | 46,7 | 18,0 |
| 15 | 13/16-20UNEF | 27,8 | 16,2 | 18,5 | 40,2 | 32,2 | 48,2 | 20,0 |
| 17 | 15/16-20UNEF | 30,8 | 19,3 | 19,2 | 41,0 | 35,7 | 49,9 | 21,5 |
| 19 | 1 1/16-18UNEF | 34,1 | 22,3 | 19,6 | 41,0 | 39,7 | 51,5 | 23,0 |
| 21 | 1 3/16-18UNEF | 37,3 | 25,8 | 20,4 | 42,1 | 42,2 | 53,1 | 25,0 |
| 23 | 1 5/16-18UNEF | 41,0 | 28,3 | 20,8 | 42,5 | 45,2 | 54,6 | 26,0 |
| 25 | 1 7/16-18UNEF | 43,7 | 31,5 | 21,7 | 43,4 | 48,2 | 56,1 | 28,0 |

TABLE 2

| ENTRY SIZE | ØG MIN | ØH MAX |
|---|---|---|
| 03 | 4,7 | 13,9 |
| 04 | 6,3 | 15,5 |
| 05 | 7,9 | 17,2 |
| 06 | 9,5 | 18,7 |
| 07 | 11,1 | 20,3 |
| 08 | 12,7 | 21,9 |
| 09 | 14,2 | 23,5 |
| 10 | 15,8 | 25,1 |
| 11 | 17,4 | 26,7 |
| 12 | 19,0 | 28,3 |
| 13 | 20,6 | 29,9 |
| 14 | 22,2 | 31,5 |
| 15 | 23,8 | 33,1 |
| 16 | 25,4 | 34,7 |
| 17 | 27,0 | 36,3 |
| 18 | 28,6 | 37,9 |
| 19 | 30,2 | 39,5 |
| 20 | 31,8 | 41,1 |
| 21 | 33,3 | 42,7 |
| 22 | 35,0 | 44,3 |
| 23 | 36,5 | 45,9 |
| 24 | 38,1 | 47,5 |

TABLE 3

| CODE | FINISH |
|---|---|
| C | ELECTROLESS NICKEL |
| B | CADMIUM OLIVE DRAB OVER ELECTROLESS NICKEL |
| ZB | ZINC COBALT OLIVE DRAB OVER ELECTROLESS NICKEL |
| ZN | ZINC NICKEL BLACK PASSIVATE OVER ELECTROLESS NICKEL |

LIST NOT EXHAUSTIVE, SEE PLATING TABLE FOR OTHER OPTIONS

DBF1-17-08-1-C

SERIES
CONNECTOR INTERFACE
ANGLE
SHELL SIZE (TABLE 1)
ENTRY SIZE (TABLE 2)
MATERIAL
ALUMINIUM ALLOY
FINISH (TABLE 3)

**For tooling and assembly instructions see www.polamco.com**

Backshell supplied without Band (see page 349)
Sealing and strain relief achieved with Heat Shrink Boot (see page 354)
Adhesive if required for assembly (see page 352)
Screenbraid for EMC/RFI screening (see page 350)

DRAWING NOT TO SCALE, DIMENSIONS IN MM

SEE PAGES 18-26 FOR COMPLETE LIST OF AVAILABLE MATERIALS, FINISHES AND CONNECTOR INTERFACES
(DIMENSIONS, FORM AND O RING SUBJECT TO CHANGE DEPENDING ON BACKSHELL MATERIAL AND CONNECTOR INTERFACE)

THIS DRAWING IS THE PROPERTY OF POLAMCO LTD AND MUST NOT BE USED FOR COMMERCIAL PURPOSES WITHOUT WRITTEN CONSENT OF THE COMPANY

# DBF - Double Band Termination

## Interface F - MIL-DTL-38999 SERIES II

Polamco

**Interconnect Solutions Worldwide**

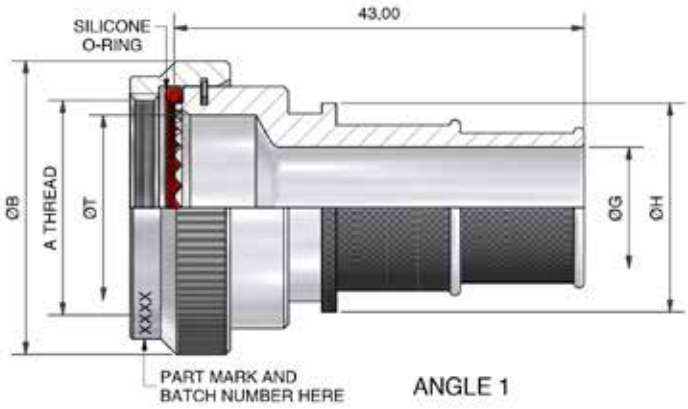


ANGLE 1

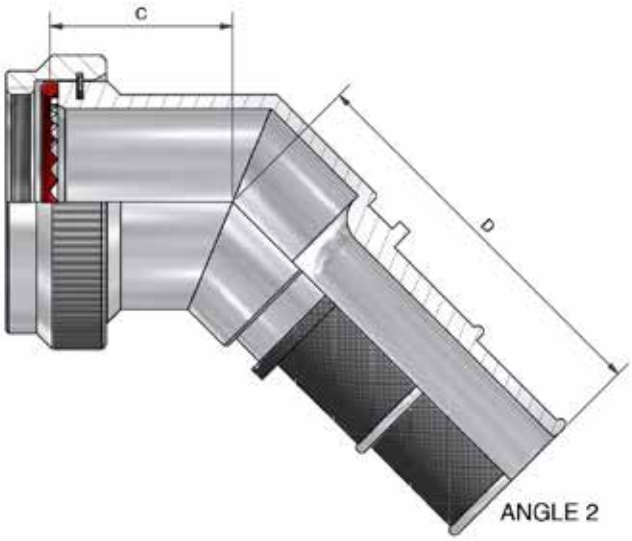


ANGLE 2

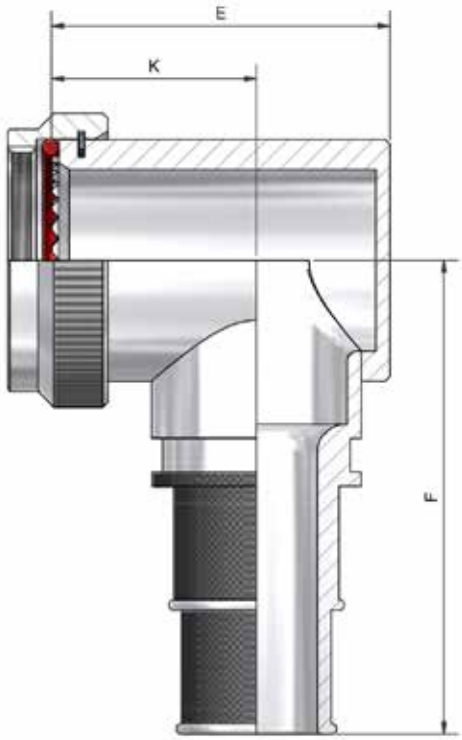


ANGLE 3

DRAWING NOT TO SCALE, DIMENSIONS IN MM

SEE PAGES 18-26 FOR COMPLETE LIST OF AVAILABLE MATERIALS, FINISHES AND CONNECTOR INTERFACES
(DIMENSIONS, FORM AND O RING SUBJECT TO CHANGE DEPENDING ON BACKSHELL MATERIAL AND CONNECTOR INTERFACE)



THIS DRAWING IS THE PROPERTY OF POLAMCO LTD AND MUST NOT BE USED FOR COMMERCIAL PURPOSES WITHOUT WRITTEN CONSENT OF THE COMPANY

# DBF - Double Band Termination

## Interface F - MIL-DTL-38999 SERIES II

Polamco

**Interconnect Solutions Worldwide**



TABLE 1

| SHELL SIZE | A THREAD | ØB MAX | ØT MIN | C ± 0,5 | D MAX | E MAX | F MAX | K ±0,5 |
|---|---|---|---|---|---|---|---|---|
| 08 | 7/16-28UNEF | 18,3 | 6,6 | 16,4 | 37,7 | 22,7 | 43,5 | 15,0 |
| 10 | 9/16-24UNEF | 21,5 | 10,1 | 17,2 | 38,9 | 26,2 | 45,2 | 17,0 |
| 12 | 11/16-24UNEF | 24,5 | 12,9 | 17,6 | 39,3 | 29,2 | 46,7 | 18,0 |
| 14 | 13/16-20UNEF | 27,8 | 16,1 | 18,5 | 40,2 | 32,2 | 48,2 | 20,0 |
| 16 | 15/16-20UNEF | 30,8 | 19,3 | 19,2 | 41,0 | 35,7 | 49,9 | 21,5 |
| 18 | 1 1/16-18UNEF | 34,1 | 21,7 | 19,6 | 41,0 | 39,7 | 51,5 | 23,0 |
| 20 | 1 3/16-18UNEF | 37,3 | 34,9 | 20,4 | 42,1 | 42,2 | 53,1 | 225,0 |
| 22 | 1 5/16-18UNEF | 40,5 | 28,1 | 20,8 | 42,5 | 45,2 | 54,6 | 26,0 |
| 24 | 1 7/16-18UNEF | 43,7 | 31,3 | 21,7 | 43,4 | 48,2 | 56,1 | 28,0 |

TABLE 2

| ENTRY SIZE | ØG MIN | ØH MAX |
|---|---|---|
| 03 | 4,7 | 13,9 |
| 04 | 6,3 | 15,5 |
| 05 | 7,9 | 17,2 |
| 06 | 9,5 | 18,7 |
| 07 | 11,1 | 20,3 |
| 08 | 12,7 | 21,9 |
| 09 | 14,2 | 23,5 |
| 10 | 15,8 | 25,1 |
| 11 | 17,4 | 26,7 |
| 12 | 19,0 | 28,3 |
| 13 | 20,6 | 29,9 |
| 14 | 22,2 | 31,5 |
| 15 | 23,8 | 33,1 |
| 16 | 25,4 | 34,7 |
| 17 | 27,0 | 36,3 |
| 18 | 28,6 | 37,9 |
| 19 | 30,2 | 39,5 |
| 20 | 31,8 | 41,1 |
| 21 | 33,3 | 42,7 |
| 22 | 35,0 | 44,3 |
| 23 | 36,5 | 45,9 |
| 24 | 38,1 | 47,5 |

TABLE 3

| CODE | FINISH |
|---|---|
| C | ELECTROLESS NICKEL |
| B | CADMIUM OLIVE DRAB OVER ELECTROLESS NICKEL |
| ZB | ZINC COBALT OLIVE DRAB OVER ELECTROLESS NICKEL |
| ZN | ZINC NICKEL BLACK PASSIVATE OVER ELECTROLESS NICKEL |

LIST NOT EXHAUSTIVE, SEE PLATING TABLE FOR OTHER OPTIONS

DBF1-16-08-1-C

- SERIES
- CONNECTOR INTERFACE
- ANGLE
- SHELL SIZE (TABLE 1)
- ENTRY SIZE (TABLE 2)
- MATERIAL
  - ALUMINIUM ALLOY
- FINISH (TABLE 3)

**For tooling and assembly instructions see www.polamco.com**

Backshell supplied without Band (see page 349)
Sealing and strain relief achieved with Heat Shrink Boot (see page 354)
Adhesive if required for assembly (see page 352)
Screenbraid for EMC/RFI screening (see page 350)

DRAWING NOT TO SCALE, DIMENSIONS IN MM

SEE PAGES 18-26 FOR COMPLETE LIST OF AVAILABLE MATERIALS, FINISHES AND CONNECTOR INTERFACES
(DIMENSIONS, FORM AND O RING SUBJECT TO CHANGE DEPENDING ON BACKSHELL MATERIAL AND CONNECTOR INTERFACE)

THIS DRAWING IS THE PROPERTY OF POLAMCO LTD AND MUST NOT BE USED FOR COMMERCIAL PURPOSES WITHOUT WRITTEN CONSENT OF THE COMPANY

# DBH - Double Band Termination

## Interface H - MIL-DTL-38999 SERIES III & IV

Polamco

**Interconnect Solutions Worldwide**

BAND TERMINATION

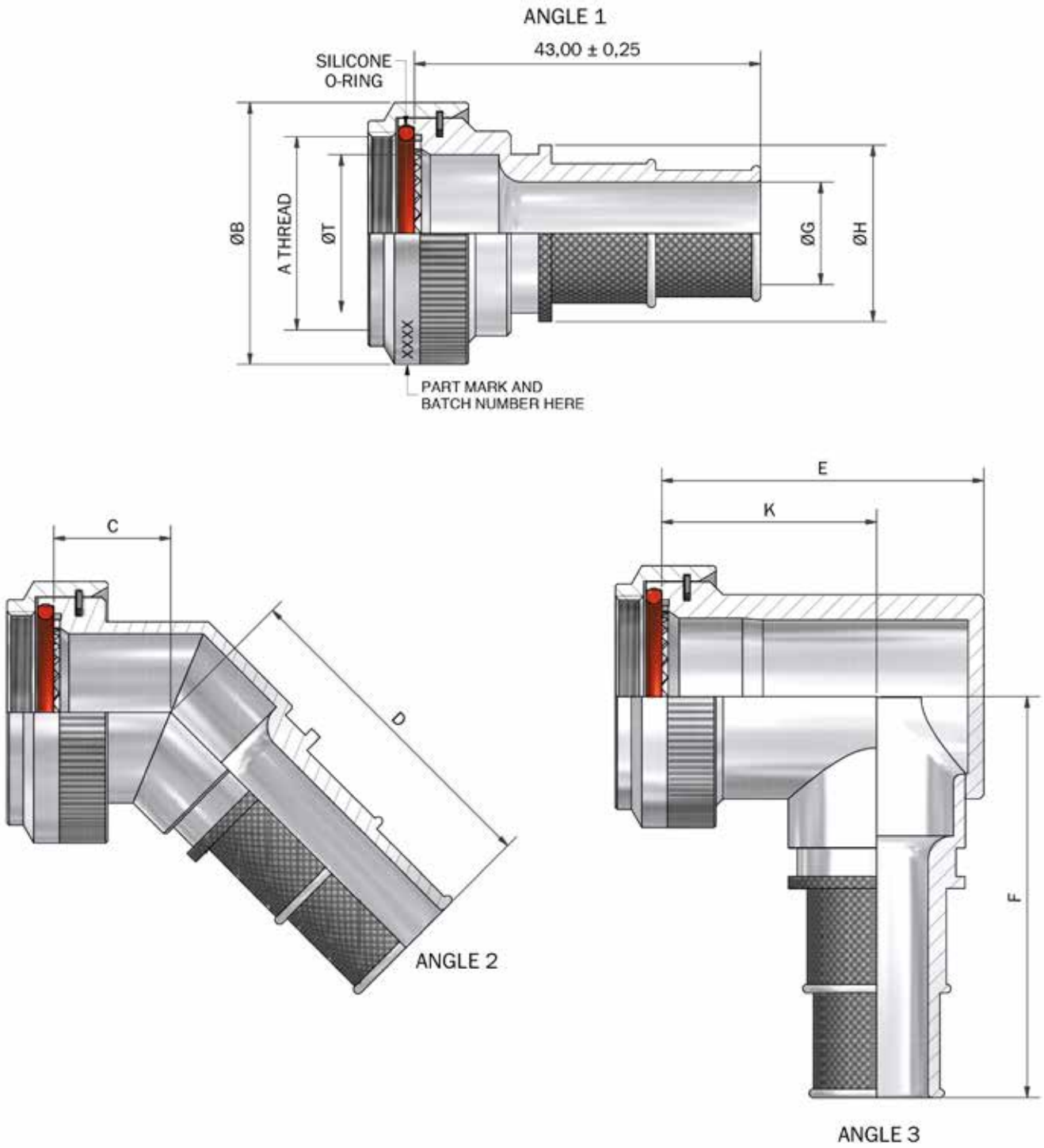


DRAWING NOT TO SCALE, DIMENSIONS IN MM

SEE PAGES 18-26 FOR COMPLETE LIST OF AVAILABLE MATERIALS, FINISHES AND CONNECTOR INTERFACES
(DIMENSIONS, FORM AND O RING SUBJECT TO CHANGE DEPENDING ON BACKSHELL MATERIAL AND CONNECTOR INTERFACE)



THIS DRAWING IS THE PROPERTY OF POLAMCO LTD AND MUST NOT BE USED FOR COMMERCIAL PURPOSES WITHOUT WRITTEN CONSENT OF THE COMPANY

TABLE 1

| SHELL SIZE | A THREAD | ØB MAX | ØT MIN | C MAX | D MAX | E MAX | F MAX | K ±0,5 |
|---|---|---|---|---|---|---|---|---|
| 09 | M12 x 1.0 | 18,0 | 6,7 | 13,1 | 37.7 | 25,5 | 43.5 | 17,5 |
| 11 | M15 x 1.0 | 21,0 | 10,2 | 13,9 | 38.9 | 26,5 | 45.2 | 17,5 |
| 13 | M18 x 1.0 | 24,5 | 13,5 | 14,5 | 39.3 | 31,0 | 46.7 | 20,0 |
| 15 | M22 x 1.0 | 29,0 | 16,2 | 15,5 | 40.2 | 37,0 | 48.2 | 24,5 |
| 17 | M25 x 1.0 | 32,5 | 19,4 | 16,1 | 41,0 | 40,0 | 49.9 | 26,7 |
| 19 | M28 x 1.0 | 35,5 | 21,8 | 16,8 | 41,0 | 44,5 | 51.5 | 27,0 |
| 21 | M31 x 1.0 | 37,0 | 25,1 | 17,1 | 42.1 | 49,0 | 53.1 | 30,5 |
| 23 | M34 x 1.0 | 40,0 | 28,2 | 17,7 | 42.5 | 51,5 | 54.6 | 31,5 |
| 25 | M37 x 1.0 | 43,5 | 31,4 | 18,4 | 43.4 | 53,0 | 56.1 | 28,5 |

TABLE 2

| ENTRY SIZE | ØG MIN | ØH MAX |
|---|---|---|
| 03 | 4,7 | 13,9 |
| 04 | 6,3 | 15,5 |
| 05 | 7,9 | 17,2 |
| 06 | 9,5 | 18,7 |
| 07 | 11,1 | 20,3 |
| 08 | 12,7 | 21,9 |
| 09 | 14,2 | 23,5 |
| 10 | 15,8 | 25,1 |
| 11 | 17,4 | 26,7 |
| 12 | 19,0 | 28,3 |
| 13 | 20,6 | 29,9 |
| 14 | 22,2 | 31,5 |
| 15 | 23,8 | 33,1 |
| 16 | 25,4 | 34,7 |
| 17 | 27,0 | 36,3 |
| 18 | 28,6 | 37,9 |
| 19 | 30,2 | 39,5 |
| 20 | 31,8 | 41,1 |
| 21 | 33,3 | 42,7 |
| 22 | 35,0 | 44,3 |
| 23 | 36,5 | 45,9 |
| 24 | 38,1 | 47.5 |

TABLE 3

| CODE | FINISH |
|---|---|
| C | ELECTROLESS NICKEL |
| B | CADMIUM OLIVE DRAB OVER ELECTROLESS NICKEL |
| ZB | ZINC COBALT OLIVE DRAB OVER ELECTROLESS NICKEL |
| ZN | ZINC NICKEL BLACK PASSIVATE OVER ELECTROLESS NICKEL |

LIST NOT EXHAUSTIVE, SEE PLATING TABLE FOR OTHER OPTIONS

DBH1-17-08-1-C

SERIES
CONNECTOR INTERFACE
ANGLE
SHELL SIZE (TABLE 1)
ENTRY SIZE (TABLE 2)
MATERIAL
ALUMINIUM ALLOY
FINISH (TABLE 3)

**For tooling and assembly instructions see www.polamco.com**

Backshell supplied without Band (see page 349)
Sealing and strain relief achieved with Heat Shrink Boot (see page 354)
Adhesive if required for assembly (see page 352)
Screenbraid for EMC/RFI screening (see page 350)

DRAWING NOT TO SCALE, DIMENSIONS IN MM

SEE PAGES 18-26 FOR COMPLETE LIST OF AVAILABLE MATERIALS, FINISHES AND CONNECTOR INTERFACES
(DIMENSIONS, FORM AND O RING SUBJECT TO CHANGE DEPENDING ON BACKSHELL MATERIAL AND CONNECTOR INTERFACE)


THIS DRAWING IS THE PROPERTY OF POLAMCO LTD AND MUST NOT BE USED FOR COMMERCIAL PURPOSES WITHOUT WRITTEN CONSENT OF THE COMPANY

# 88F - Band-In-A-Can

## Interface F - MIL-DTL-38999 SERIES I

Polamco

**Interconnect Solutions Worldwide**

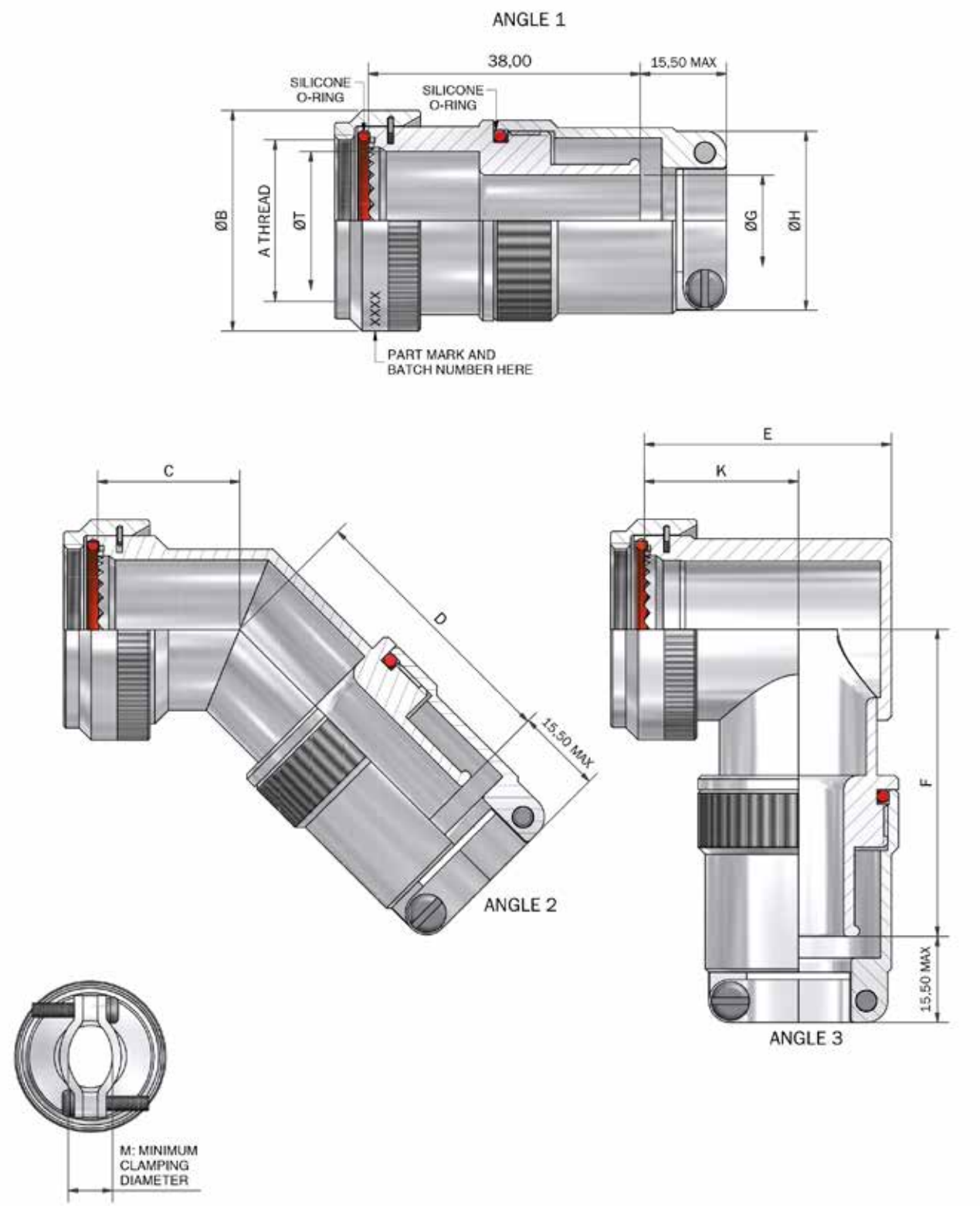


DRAWING NOT TO SCALE, DIMENSIONS IN MM

SEE PAGES 18-26 FOR COMPLETE LIST OF AVAILABLE MATERIALS, FINISHES AND CONNECTOR INTERFACES
(DIMENSIONS, FORM AND O RING SUBJECT TO CHANGE DEPENDING ON BACKSHELL MATERIAL AND CONNECTOR INTERFACE)



THIS DRAWING IS THE PROPERTY OF POLAMCO LTD AND MUST NOT BE USED FOR COMMERCIAL PURPOSES WITHOUT WRITTEN CONSENT OF THE COMPANY

# 88F - Band-In-A-Can

## Interface F - MIL-DTL-38999 SERIES I

Polamco

**Interconnect Solutions Worldwide**



TABLE 1

| SHELL SIZE | A THREAD | ØB MAX | ØT MIN | C ±0,5 | D MAX | E MAX | F MAX | K ±0,5 |
|---|---|---|---|---|---|---|---|---|
| 09 | 7/16-28 UNEF | 18,0 | 6,8 | 16,4 | 40,5 | 22,7 | 41,3 | 15,0 |
| 11 | 9/16-24 UNEF | 21,0 | 10,2 | 17,2 | 41,9 | 26,2 | 43,0 | 17,0 |
| 13 | 11/16-24 UNEF | 24,5 | 13,1 | 17,6 | 42,3 | 29,2 | 44,5 | 18,0 |
| 15 | 13/16-20 UNEF | 27,8 | 16,2 | 18,5 | 43,2 | 32,2 | 46,1 | 20,0 |
| 17 | 15/16-20 UNEF | 30,8 | 19,3 | 19,2 | 44,0 | 35,7 | 47,7 | 21,5 |
| 19 | 1 1/16-18 UNEF | 34,1 | 22,3 | 19,6 | 44,1 | 39,7 | 48,4 | 23,0 |
| 21 | 1 3/16-18 UNEF | 37,3 | 25,8 | 20,4 | 45,0 | 42,2 | 50,0 | 25,0 |
| 23 | 1 5/16-18 UNEF | 41,0 | 28,3 | 20,8 | 45,5 | 45,2 | 51,6 | 26,0 |
| 25 | 1 7/16-18 UNEF | 43,7 | 31,5 | 21,7 | 46,2 | 48,2 | 53,1 | 28,0 |

TABLE 2

| ENTRY SIZE | ØG MIN | ØH MAX | M ±0,5 |
|---|---|---|---|
| 03 | 4,7 | 17,2 | 6,8 |
| 04 | 6,3 | 18,8 | 6,7 |
| 05 | 7,9 | 20,4 | 7,8 |
| 06 | 9,5 | 22,0 | 7,9 |
| 07 | 11,1 | 23,5 | 8,6 |
| 08 | 12,7 | 25,0 | 9,0 |
| 09 | 14,2 | 26,7 | 10,2 |
| 10 | 15,8 | 28,3 | 10,4 |
| 11 | 17,4 | 30,0 | 12,5 |
| 12 | 19,0 | 31,5 | 12,4 |
| 13 | 20,6 | 33,0 | 15,0 |
| 14 | 22,2 | 34,7 | 15,4 |
| 15 | 23,8 | 36,4 | 16,8 |
| 16 | 25,4 | 37,8 | 17,3 |
| 17 | 27,0 | 39,4 | 18,8 |
| 18 | 28,6 | 41,0 | 19,5 |
| 19 | 30,2 | 42,6 | 23,9 |
| 20 | 31,8 | 44,2 | 22,4 |
| 21 | 33,3 | 45,8 | 23,8 |
| 22 | 35,0 | 47,3 | 24,4 |
| 23 | 36,5 | 50,9 | 26,4 |
| 24 | 38,1 | 50,9 | 26,4 |

TABLE 3

| CODE | FINISH |
|---|---|
| C | ELECTROLESS NICKEL |
| B | CADMIUM OLIVE DRAB OVER ELECTROLESS NICKEL |
| ZB | ZINC COBALT OLIVE DRAB OVER ELECTROLESS NICKEL |
| ZN | ZINC NICKEL BLACK PASSIVATE OVER ELECTROLESS NICKEL |

LIST NOT EXHAUSTIVE, SEE PLATING TABLE FOR OTHER OPTIONS

88F1-17-08-1-C

- SERIES
- CONNECTOR INTERFACE
- ANGLE
- SHELL SIZE (TABLE 1)
- ENTRY SIZE (TABLE 2)
- MATERIAL
  - ALUMINIUM ALLOY
- FINISH (TABLE 3)

**For tooling and assembly instructions see www.polamco.com**

Backshell supplied without Band (see page 349)
Sealing and strain relief achieved with Heat Shrink Boot (see page 354)
Adhesive if required for assembly (see page 352)
Screenbraid for EMC/RFI screening (see page 350)

DRAWING NOT TO SCALE, DIMENSIONS IN MM

SEE PAGES 18-26 FOR COMPLETE LIST OF AVAILABLE MATERIALS, FINISHES AND CONNECTOR INTERFACES
(DIMENSIONS, FORM AND O RING SUBJECT TO CHANGE DEPENDING ON BACKSHELL MATERIAL AND CONNECTOR INTERFACE)

THIS DRAWING IS THE PROPERTY OF POLAMCO LTD AND MUST NOT BE USED FOR COMMERCIAL PURPOSES WITHOUT WRITTEN CONSENT OF THE COMPANY

# 88F - Band-In-A-Can

## Interface F - MIL-DTL-38999 SERIES II

Polamco

**Interconnect Solutions Worldwide**

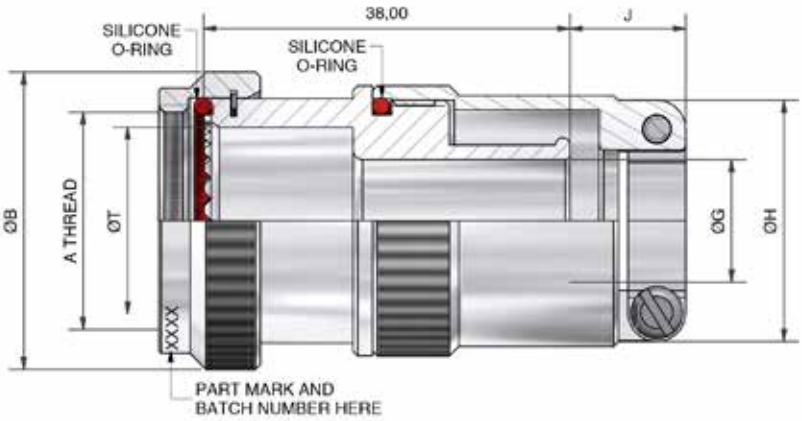


ANGLE 1

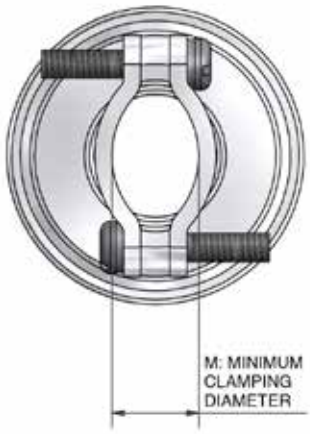


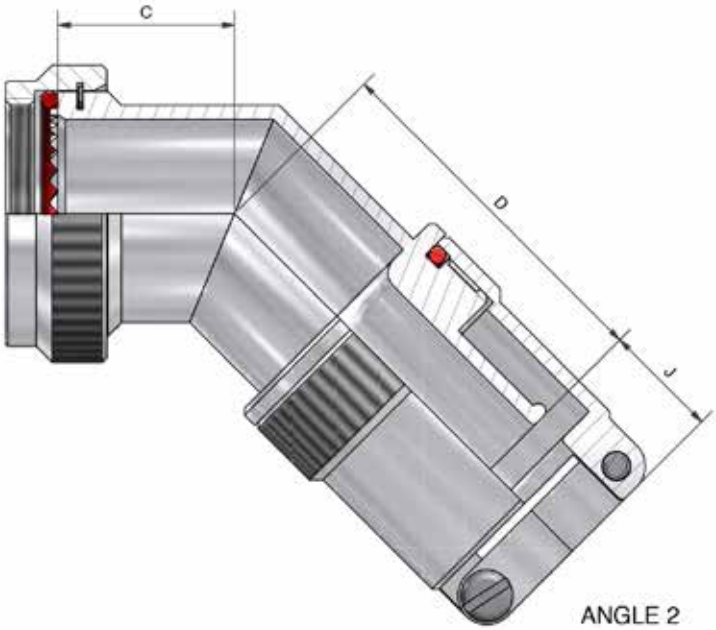


ANGLE 2

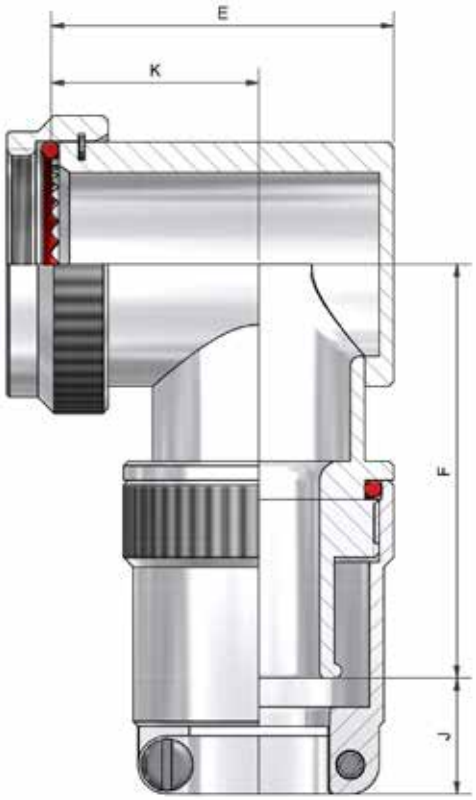


ANGLE 3

DRAWING NOT TO SCALE, DIMENSIONS IN MM

SEE PAGES 18-26 FOR COMPLETE LIST OF AVAILABLE MATERIALS, FINISHES AND CONNECTOR INTERFACES
(DIMENSIONS, FORM AND O RING SUBJECT TO CHANGE DEPENDING ON BACKSHELL MATERIAL AND CONNECTOR INTERFACE)



THIS DRAWING IS THE PROPERTY OF POLAMCO LTD AND MUST NOT BE USED FOR COMMERCIAL PURPOSES WITHOUT WRITTEN CONSENT OF THE COMPANY

# 88F - Band-In-A-Can

## Interface F - MIL-DTL-38999 SERIES II

Polamco

**Interconnect Solutions Worldwide**



TABLE 1

| SHELL SIZE | A THREAD | ØB MAX | C ±0,5 | D MAX | E MAX | F MAX | K ±0,5 | ØT MIN |
|---|---|---|---|---|---|---|---|---|
| 08 | 7/16 -28UNEF | 18,3 | 16,4 | 40,5 | 22,7 | 41,3 | 15,0 | 6,6 |
| 10 | 9/16 -24UNEF | 21,5 | 17,2 | 41,9 | 26,2 | 43,0 | 17,0 | 10,1 |
| 12 | 11/16 -24UNEF | 24,5 | 17,6 | 42,3 | 29,2 | 44,5 | 18,0 | 12,9 |
| 14 | 13/16 -20UNEF | 27,8 | 18,5 | 43,2 | 32,2 | 46,1 | 20,0 | 16,1 |
| 16 | 15/16 -20UNEF | 30,8 | 19,2 | 44,0 | 35,7 | 47,7 | 21,5 | 19,3 |
| 18 | 1 1/16 -18UNEF | 34,1 | 19,6 | 44,1 | 39,7 | 48,4 | 23,0 | 21,7 |
| 20 | 1 3/16 -18UNEF | 37,3 | 20,4 | 45,0 | 42,2 | 50,0 | 25,0 | 24,9 |
| 22 | 1 5/16 -18UNEF | 40,5 | 20,8 | 45,5 | 45,2 | 51,6 | 26,0 | 28,1 |
| 24 | 1 7/16 -18UNEF | 43,7 | 21,7 | 46,2 | 48,2 | 53,1 | 28,0 | 31,3 |

TABLE 2

| ENTRY SIZE | ØG | ØH MAX | J ±0,5 | M ±0,5 |
|---|---|---|---|---|
| 03 | 4,8 | 17,2 | 12 | 6,8 |
| 04 | 6,4 | 18,8 | 12 | 6,7 |
| 05 | 7,9 | 20,4 | 12 | 7,8 |
| 06 | 9,5 | 22,0 | 12 | 7,9 |
| 07 | 11,1 | 23,5 | 12 | 8,6 |
| 08 | 12,7 | 25,0 | 12 | 9,0 |
| 09 | 14,3 | 26,7 | 12 | 10,2 |
| 10 | 15,9 | 28,3 | 12 | 10,4 |
| 11 | 17,5 | 30,0 | 12 | 12,5 |
| 12 | 19,1 | 31,5 | 12 | 12,4 |
| 13 | 20,6 | 33,0 | 12 | 15,0 |
| 14 | 22,2 | 34,7 | 15 | 15,4 |
| 15 | 23,8 | 36,4 | 15 | 16,8 |
| 16 | 25,4 | 37,8 | 15 | 17,3 |
| 17 | 27,0 | 39,4 | 15 | 18,8 |
| 18 | 28,6 | 41,0 | 15 | 19,5 |
| 19 | 30,2 | 42,6 | 15 | 23,9 |
| 20 | 31,8 | 44,2 | 15 | 22,4 |
| 21 | 33,4 | 45,8 | 15 | 23,8 |
| 22 | 35,0 | 47,3 | 15 | 24,4 |
| 23 | 36,6 | 50,9 | 15 | 26,4 |
| 24 | 38,1 | 50,9 | 15 | 26,4 |

TABLE 3

| CODE | FINISH |
|---|---|
| C | ELECTROLESS NICKEL |
| B | CADMIUM OLIVE DRAB OVER ELECTROLESS NICKEL |
| ZB | ZINC COBALT OLIVE DRAB OVER ELECTROLESS NICKEL |
| ZN | ZINC NICKEL BLACK PASSIVATE OVER ELECTROLESS NICKEL |

LIST NOT EXHAUSTIVE, SEE PLATING TABLE FOR OTHER OPTIONS

88F1-16-08-1-C

SERIES
CONNECTOR INTERFACE
ANGLE
SHELL SIZE (TABLE 1)
ENTRY SIZE (TABLE 2)
MATERIAL
ALUMINIUM ALLOY
PLATING (TABLE 3)

**For tooling and assembly instructions see www.polamco.com**

Backshell supplied without Band (see page 349)
Sealing and strain relief achieved with Heat Shrink Boot (see page 354)
Adhesive if required for assembly (see page 352)
Screenbraid for EMC/RFI screening (see page 350)

DRAWING NOT TO SCALE, DIMENSIONS IN MM

SEE PAGES 18-26 FOR COMPLETE LIST OF AVAILABLE MATERIALS, FINISHES AND CONNECTOR INTERFACES
(DIMENSIONS, FORM AND O RING SUBJECT TO CHANGE DEPENDING ON BACKSHELL MATERIAL AND CONNECTOR INTERFACE)

THIS DRAWING IS THE PROPERTY OF POLAMCO LTD AND MUST NOT BE USED FOR COMMERCIAL PURPOSES WITHOUT WRITTEN CONSENT OF THE COMPANY

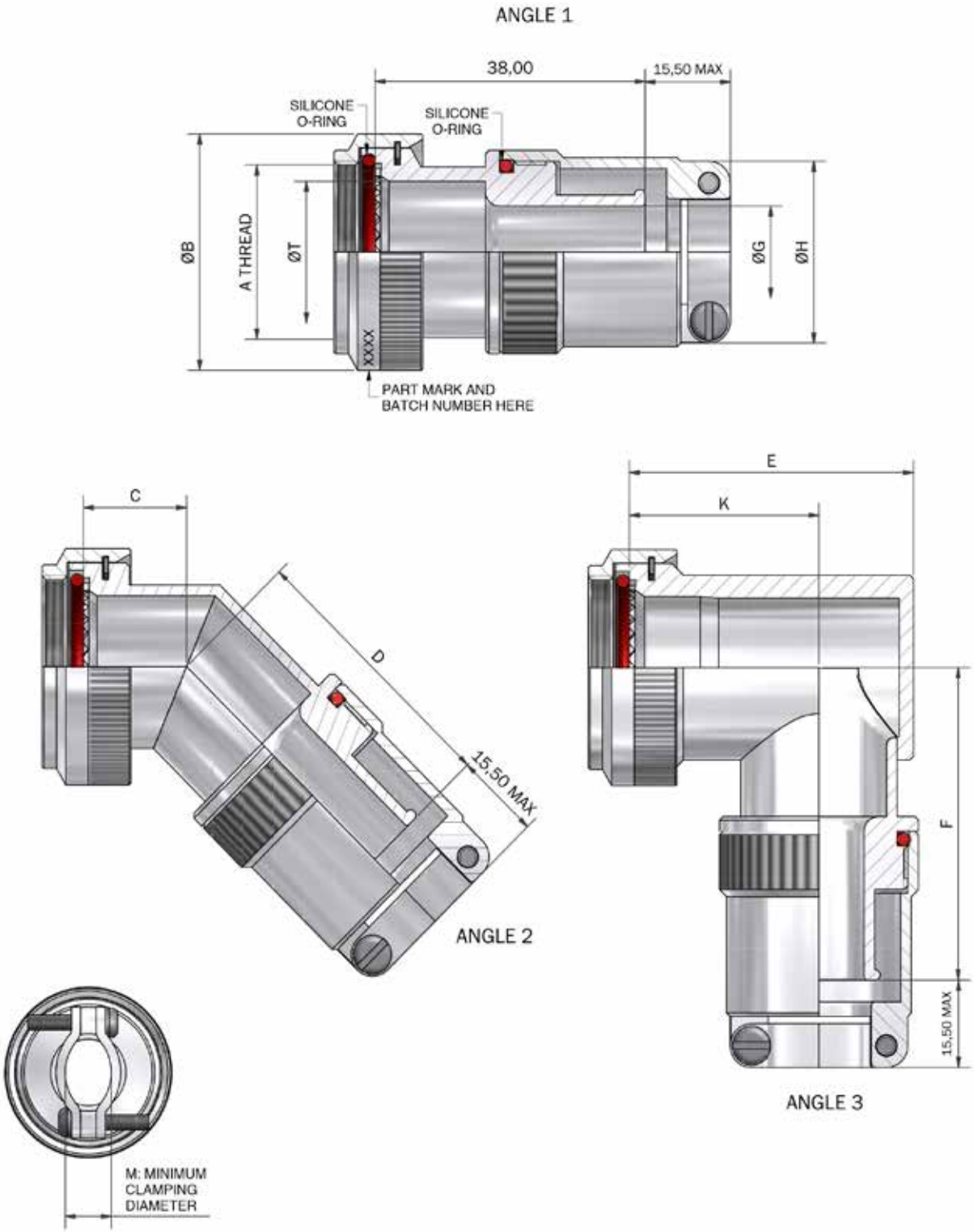


DRAWING NOT TO SCALE, DIMENSIONS IN MM

SEE PAGES 18-26 FOR COMPLETE LIST OF AVAILABLE MATERIALS, FINISHES AND CONNECTOR INTERFACES
(DIMENSIONS, FORM AND O RING SUBJECT TO CHANGE DEPENDING ON BACKSHELL MATERIAL AND CONNECTOR INTERFACE)




THIS DRAWING IS THE PROPERTY OF POLAMCO LTD AND MUST NOT BE USED FOR COMMERCIAL PURPOSES WITHOUT WRITTEN CONSENT OF THE COMPANY

# 88H - Band-In-A-Can

## Interface H - MIL-DTL-38999 SERIES III & IV

Polamco

**Interconnect Solutions Worldwide**



TABLE 1

| SHELL SIZE | A THREAD | ØB MAX | ØT MIN | C MAX | D MAX | E MAX | F MAX | K ±0,5 |
|---|---|---|---|---|---|---|---|---|
| 09 | M12 x 1.0 | 18,0 | 6,7 | 13,1 | 40,5 | 25.7 | 41,3 | 17,5 |
| 11 | M15 x 1.0 | 21,0 | 10,2 | 13,9 | 41,9 | 26.7 | 43,0 | 17,5 |
| 13 | M18 x 1.0 | 24,5 | 13,5 | 14,5 | 42,3 | 31.2 | 44,5 | 20,0 |
| 15 | M22 x 1.0 | 29,0 | 16,2 | 15,5 | 43,2 | 37.2 | 46,1 | 24,5 |
| 17 | M25 x 1.0 | 32,5 | 19,4 | 16,1 | 44,0 | 40.2 | 47,7 | 26,7 |
| 19 | M28 x 1.0 | 35,5 | 21,8 | 16,8 | 44,1 | 44.7 | 48,4 | 27,0 |
| 21 | M31 x 1.0 | 37,0 | 25,1 | 17,1 | 45,0 | 49.2 | 50,0 | 30,5 |
| 23 | M34 x 1.0 | 40,0 | 28,2 | 17,7 | 45,5 | 51.7 | 51,6 | 31,5 |
| 25 | M37 x 1.0 | 43,5 | 31,4 | 18,4 | 46,2 | 53.2 | 53,1 | 28,5 |

TABLE 2

| ENTRY SIZE | ØG MIN | ØH MAX | M ±0,5 |
|---|---|---|---|
| 03 | 4,7 | 17,2 | 6,8 |
| 04 | 6,3 | 18,8 | 6,7 |
| 05 | 7,9 | 20,4 | 7,8 |
| 06 | 9,5 | 22,0 | 7,9 |
| 07 | 11,1 | 23,5 | 8,6 |
| 08 | 12,7 | 25,0 | 9,0 |
| 09 | 14,2 | 26,7 | 10,2 |
| 10 | 15,8 | 28,3 | 10,4 |
| 11 | 17,4 | 30,0 | 12,5 |
| 12 | 19,0 | 31,5 | 12,4 |
| 13 | 20,6 | 33,0 | 15,0 |
| 14 | 22,2 | 34,7 | 15,4 |
| 15 | 23,8 | 36,4 | 16,8 |
| 16 | 25,4 | 37,8 | 17,3 |
| 17 | 27,0 | 39,4 | 18,8 |
| 18 | 28,6 | 41,0 | 19,5 |
| 19 | 30,2 | 42,6 | 23,9 |
| 20 | 31,8 | 44,2 | 22,4 |
| 21 | 33,3 | 45,8 | 23,8 |
| 22 | 35,0 | 47,3 | 24,4 |
| 23 | 36,5 | 50,9 | 26,4 |
| 24 | 38,1 | 50,9 | 26,4 |

TABLE 3

| CODE | FINISH |
|---|---|
| C | ELECTROLESS NICKEL |
| B | CADMIUM OLIVE DRAB OVER ELECTROLESS NICKEL |
| ZB | ZINC COBALT OLIVE DRAB OVER ELECTROLESS NICKEL |
| ZN | ZINC NICKEL BLACK PASSIVATE OVER ELECTROLESS NICKEL |

LIST NOT EXHAUSTIVE, SEE PLATING TABLE FOR OTHER OPTIONS

88H1-17-08-1-C

- SERIES
- CONNECTOR INTERFACE
- ANGLE
- SHELL SIZE (TABLE 1)
- ENTRY SIZE (TABLE 2)
- MATERIAL
  - ALUMINIUM ALLOY
- FINISH (TABLE 3)

**For tooling and assembly instructions see www.polamco.com**

Backshell supplied without Band (see page 349)
Sealing and strain relief achieved with Heat Shrink Boot (see page 354)
Adhesive if required for assembly (see page 352)
Screenbraid for EMC/RFI screening (see page 350)

DRAWING NOT TO SCALE, DIMENSIONS IN MM

SEE PAGES 18-26 FOR COMPLETE LIST OF AVAILABLE MATERIALS, FINISHES AND CONNECTOR INTERFACES
(DIMENSIONS, FORM AND O RING SUBJECT TO CHANGE DEPENDING ON BACKSHELL MATERIAL AND CONNECTOR INTERFACE)

THIS DRAWING IS THE PROPERTY OF POLAMCO LTD AND MUST NOT BE USED FOR COMMERCIAL PURPOSES WITHOUT WRITTEN CONSENT OF THE COMPANY

# 88F1 (L25) - Micro Band-In-A-Can

## Interface F - MIL-DTL-38999 SERIES I

Polamco

**Interconnect Solutions Worldwide**

BAND TERMINATION

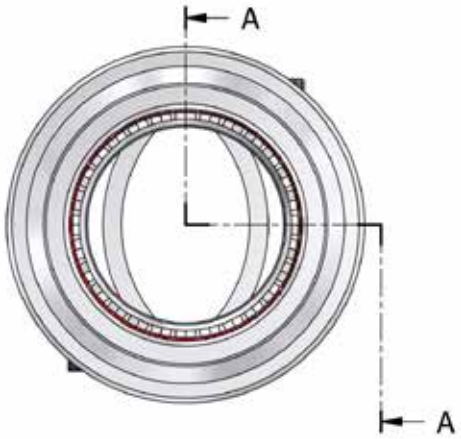


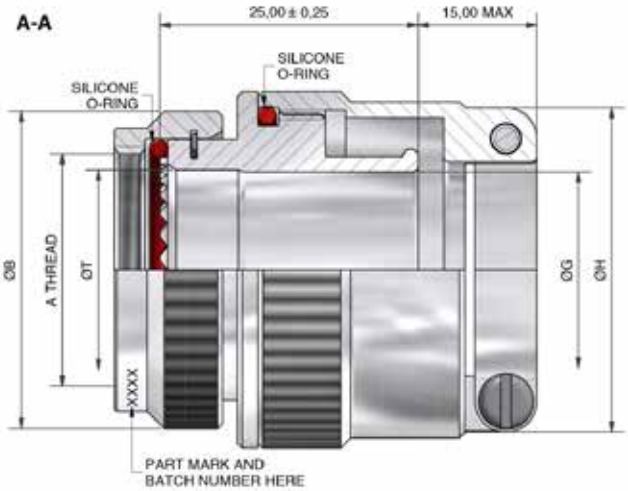


TABLE 1

| SHELL SIZE | A THREAD | ØB MAX | ØT MIN |
|---|---|---|---|
| 08 | 7/16 - 28UNEF | 18,3 | 6,6 |
| 10 | 9/16 - 24UNEF | 21,5 | 10,1 |
| 12 | 11/16 - 24UNEF | 24,5 | 12,9 |
| 14 | 13/16 - 20UNEF | 27,8 | 16,1 |
| 16 | 15/16 - 20UNEF | 30,8 | 19,3 |
| 18 | 1 1/16 - 18UNEF | 34,1 | 21,7 |
| 20 | 1 3/16 - 18UNEF | 37,3 | 24,9 |
| 22 | 1 5/16 - 18UNEF | 40,5 | 28,1 |
| 24 | 1 7/16 - 18UNEF | 43,7 | 31,3 |

TABLE 2

| ENTRY SIZE | ØG | ØH MAX |
|---|---|---|
| 03 | 4,8 | 17,2 |
| 04 | 6,4 | 18,8 |
| 05 | 7,9 | 20,4 |
| 06 | 9,5 | 22,0 |
| 07 | 11,1 | 23,5 |
| 08 | 12,7 | 25,0 |
| 09 | 14,3 | 26,7 |
| 10 | 15,9 | 28,3 |
| 11 | 17,5 | 30,0 |
| 12 | 19,1 | 31,5 |
| 13 | 20,6 | 33,0 |
| 14 | 22,2 | 34,7 |
| 15 | 23,8 | 36,4 |
| 16 | 25,4 | 37,8 |
| 17 | 27,0 | 39,4 |
| 18 | 28,6 | 41,0 |
| 19 | 30,2 | 42,6 |
| 20 | 31,8 | 44,2 |
| 21 | 33,4 | 45,8 |
| 22 | 35,0 | 47,3 |
| 23 | 36,6 | 50,9 |
| 24 | 38,1 | 50,9 |

TABLE 3

| CODE | MATERIAL / PLATING |
|---|---|
| 1-C | ALUMINIUM / ELECTROLESS NICKEL |
| 1-B | ALUMINIUM / CADMIUM OLIVE DRAB OVER ELECTROLESS NICKEL |
| 1-ZB | ALUMINIUM / ZINC COBALT OLIVE DRAB OVER ELECTROLESS NICKEL |
| 1-ZN | ALUMINIUM / ZINC NICKEL BLACK PASSIVATE OVER ELECTROLESS NICKEL |
| 4-J | STAINLESS STEEL / PASSIVATE |
| 2-Z | NICKEL ALUMINIUM BRONZE / SHOT BLAST |

LIST NOT EXHAUSTIVE, SEE PLATING TABLE FOR OTHER OPTIONS

88F1-16-12-1-C-MB-L25

- SERIES
- CONNECTOR INTERFACE
- ANGLE
- SHELL SIZE (TABLE 1)
- ENTRY SIZE (TABLE 2)
- MATERIAL (TABLE 3)
- FINISH (TABLE 3)
- BAND REF.
  - MICRO BAND
- SPECIAL LENGTH
  - MICRO BAND ONLY

**For tooling and assembly instructions see www.polamco.com**

Backshell supplied without Band (see page 349)
Sealing and strain relief achieved with Heat Shrink Boot (see page 354)
Adhesive if required for assembly (see page 352)
Screenbraid for EMC/RFI screening (see page 350)

DRAWING NOT TO SCALE, DIMENSIONS IN MM

SEE PAGES 18-26 FOR COMPLETE LIST OF AVAILABLE MATERIALS, FINISHES AND CONNECTOR INTERFACES
(DIMENSIONS, FORM AND O RING SUBJECT TO CHANGE DEPENDING ON BACKSHELL MATERIAL AND CONNECTOR INTERFACE)



THIS DRAWING IS THE PROPERTY OF POLAMCO LTD AND MUST NOT BE USED FOR COMMERCIAL PURPOSES WITHOUT WRITTEN CONSENT OF THE COMPANY

# 88F1 (L25) - Micro Band-In-A-Can

## Interface F - MIL-DTL-38999 SERIES II

Polamco

**Interconnect Solutions Worldwide**



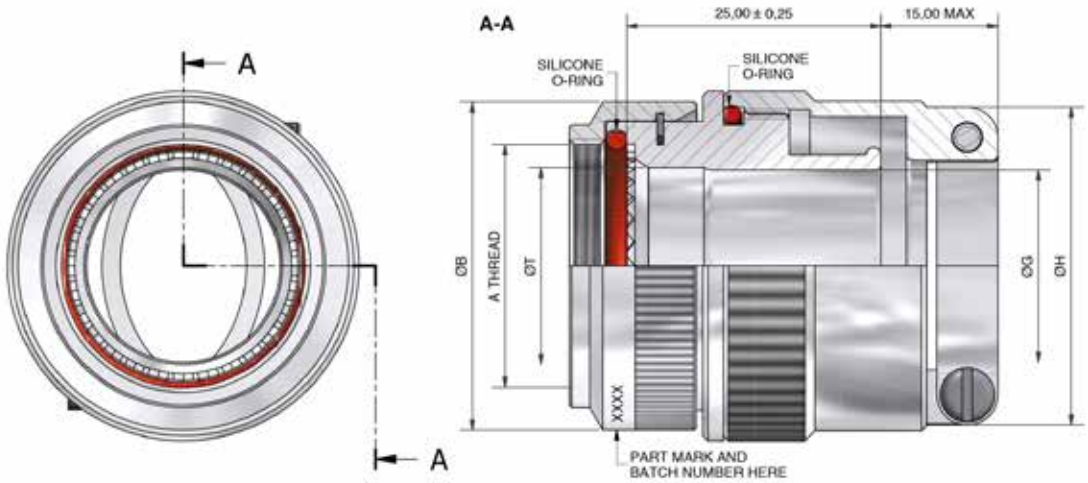


TABLE 1

| SHELL SIZE | A THREAD | ØB MAX | ØT MIN |
|---|---|---|---|
| 09 | 7/16-28UNEF | 18,0 | 6,8 |
| 11 | 9/16-24UNEF | 21,0 | 10,2 |
| 13 | 11/16-24UNEF | 24,5 | 13,1 |
| 15 | 13/16-20UNEF | 27,8 | 16,2 |
| 17 | 15/16-20UNEF | 30,8 | 19,3 |
| 19 | 1 1/16-18UNEF | 34,1 | 22,3 |
| 21 | 1 3/16-18UNEF | 37,3 | 25,8 |
| 23 | 1 5/16-18UNEF | 41,0 | 28,3 |
| 25 | 1 7/16-18UNEF | 43,7 | 31,5 |

TABLE 2

| ENTRY SIZE | ØG | ØH MAX |
|---|---|---|
| 03 | 4,8 | 17,2 |
| 04 | 6,4 | 18,8 |
| 05 | 7,9 | 20,4 |
| 06 | 9,5 | 22,0 |
| 07 | 11,1 | 23,5 |
| 08 | 12,7 | 25,0 |
| 09 | 14,3 | 26,7 |
| 10 | 15,9 | 28,3 |
| 11 | 17,5 | 30,0 |
| 12 | 19,1 | 31,5 |
| 13 | 20,6 | 33,0 |
| 14 | 22,2 | 34,7 |
| 15 | 23,8 | 36,4 |
| 16 | 25,4 | 37,8 |
| 17 | 27,0 | 39,4 |
| 18 | 28,6 | 41,0 |
| 19 | 30,2 | 42,6 |
| 20 | 31,8 | 44,2 |
| 21 | 33,4 | 45,8 |
| 22 | 35,0 | 47,3 |
| 23 | 36,6 | 50,9 |
| 24 | 38,1 | 50,9 |

TABLE 3

| CODE | MATERIAL / PLATING |
|---|---|
| 1-C | ALUMINIUM / ELECTROLESS NICKEL |
| 1-B | ALUMINIUM / CADMIUM OLIVE DRAB OVER ELECTROLESS NICKEL |
| 1-ZB | ALUMINIUM / ZINC COBALT OLIVE DRAB OVER ELECTROLESS NICKEL |
| 1-ZN | ALUMINIUM / ZINC NICKEL BLACK PASSIVATE OVER ELECTROLESS NICKEL |
| 4-J | STAINLESS STEEL / PASSIVATE |
| 2-Z | NICKEL ALUMINIUM BRONZE / SHOT BLAST |

LIST NOT EXHAUSTIVE, SEE PLATING TABLE FOR OTHER OPTIONS

88F1-17-12-1-C-MB-L25

- SERIES
- CONNECTOR INTERFACE
- ANGLE
- SHELL SIZE (TABLE 1)
- ENTRY SIZE (TABLE 2)
- MATERIAL (TABLE 3)
- FINISH (TABLE 3)
- BAND REF. MICRO BAND
- SPECIAL LENGTH MICRO BAND ONLY

**For tooling and assembly instructions see www.polamco.com**

Backshell supplied without Band (see page 349)
Sealing and strain relief achieved with Heat Shrink Boot (see page 354)
Adhesive if required for assembly (see page 352)
Screenbraid for EMC/RFI screening (see page 350)

DRAWING NOT TO SCALE, DIMENSIONS IN MM

SEE PAGES 18-26 FOR COMPLETE LIST OF AVAILABLE MATERIALS, FINISHES AND CONNECTOR INTERFACES
(DIMENSIONS, FORM AND O RING SUBJECT TO CHANGE DEPENDING ON BACKSHELL MATERIAL AND CONNECTOR INTERFACE)

THIS DRAWING IS THE PROPERTY OF POLAMCO LTD AND MUST NOT BE USED FOR COMMERCIAL PURPOSES WITHOUT WRITTEN CONSENT OF THE COMPANY

# 88H1 (L25) - Micro Band-In-A-Can

## Interface H - MIL-DTL-38999 SERIES III & IV

Polamco

**Interconnect Solutions Worldwide**

BAND TERMINATION

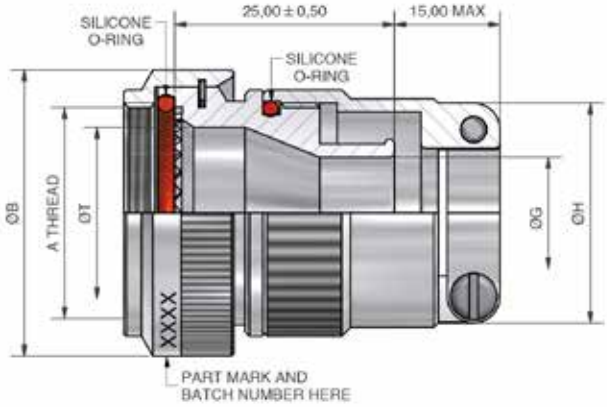


TABLE 1

| SHELL SIZE | A THREAD | ØB MAX | ØT |
|---|---|---|---|
| 09 | M12 x 1.0 | 18,0 | 6,8 |
| 11 | M15 x 1.0 | 21,0 | 10,3 |
| 13 | M18 x 1.0 | 24,5 | 13,6 |
| 15 | M22 x 1.0 | 29,0 | 16,3 |
| 17 | M25 x 1.0 | 32,5 | 19,5 |
| 19 | M28 x 1.0 | 35,5 | 21,9 |
| 21 | M31 x 1.0 | 37,0 | 25,2 |
| 23 | M34 x 1.0 | 40,0 | 28,3 |
| 25 | M37 x 1.0 | 43,5 | 31,5 |

NOTES
1. BAND REF.
MB - MICRO BAND (207mm)
LM - LONG MICROBAND (362mm)
OMIT REF. FOR NO BAND

TABLE 2

| ENTRY SIZE | ØG | ØH MAX |
|---|---|---|
| 03 | 4,77 | 17,2 |
| 04 | 6,35 | 18,8 |
| 05 | 7,92 | 20,4 |
| 06 | 9,52 | 22,0 |
| 07 | 11,13 | 23,5 |
| 08 | 12,70 | 25,0 |
| 09 | 14,27 | 26,7 |
| 10 | 15,88 | 28,3 |
| 11 | 17,47 | 30,0 |
| 12 | 19,05 | 31,5 |
| 13 | 20,62 | 33,0 |
| 14 | 22,23 | 34,7 |
| 15 | 23,82 | 36,4 |
| 16 | 25,40 | 37,8 |
| 17 | 27,00 | 39,4 |
| 18 | 28,60 | 41,0 |
| 19 | 30,20 | 42,6 |
| 20 | 31,80 | 44,2 |
| 21 | 33,38 | 45,8 |
| 22 | 35,00 | 47,3 |
| 23 | 36,58 | 50,9 |
| 24 | 38,10 | 50,9 |

TABLE 3

| CODE | MATERIAL / PLATING |
|---|---|
| 1-C | ALUMINIUM / ELECTROLESS NICKEL |
| 1-B | ALUMINIUM / CADMIUM OLIVE DRAB OVER ELECTROLESS NICKEL |
| 1-ZB | ALUMINIUM / ZINC COBALT OLIVE DRAB OVER ELECTROLESS NICKEL |
| 1-ZN | ALUMINIUM / ZINC NICKEL BLACK PASSIVATE OVER ELECTROLESS NICKEL |
| 4-J | STAINLESS STEEL / PASSIVATE |
| 2-Z | NICKEL ALUMINIUM BRONZE / SHOT BLAST |

LIST NOT EXHAUSTIVE, SEE PLATING TABLE FOR OTHER OPTIONS

88H1-17-08-1-C-MB-L25

- SERIES
- CONNECTOR INTERFACE
- ANGLE (1 - STRAIGHT)
- SHELL SIZE (TABLE 1)
- ENTRY SIZE (TABLE 2)
- MATERIAL (TABLE 3)
- PLATING (TABLE 3)
- BAND REF. (NOTE 1)
- SPECIAL LENGTH (MICROBAND ONLY)

**For tooling and assembly instructions see www.polamco.com**

Backshell supplied without Band (see page 349)
Sealing and strain relief achieved with Heat Shrink Boot (see page 354)
Adhesive if required for assembly (see page 352)
Screenbraid for EMC/RFI screening (see page 350)

DRAWING NOT TO SCALE, DIMENSIONS IN MM

SEE PAGES 18-26 FOR COMPLETE LIST OF AVAILABLE MATERIALS, FINISHES AND CONNECTOR INTERFACES
(DIMENSIONS, FORM AND O RING SUBJECT TO CHANGE DEPENDING ON BACKSHELL MATERIAL AND CONNECTOR INTERFACE)



THIS DRAWING IS THE PROPERTY OF POLAMCO LTD AND MUST NOT BE USED FOR COMMERCIAL PURPOSES WITHOUT WRITTEN CONSENT OF THE COMPANY

# 88F3C - Band-In-A-Can Cobra Head

## Interface F - MIL-DTL-38999 SERIES I & II

Polamco

**Interconnect Solutions Worldwide**

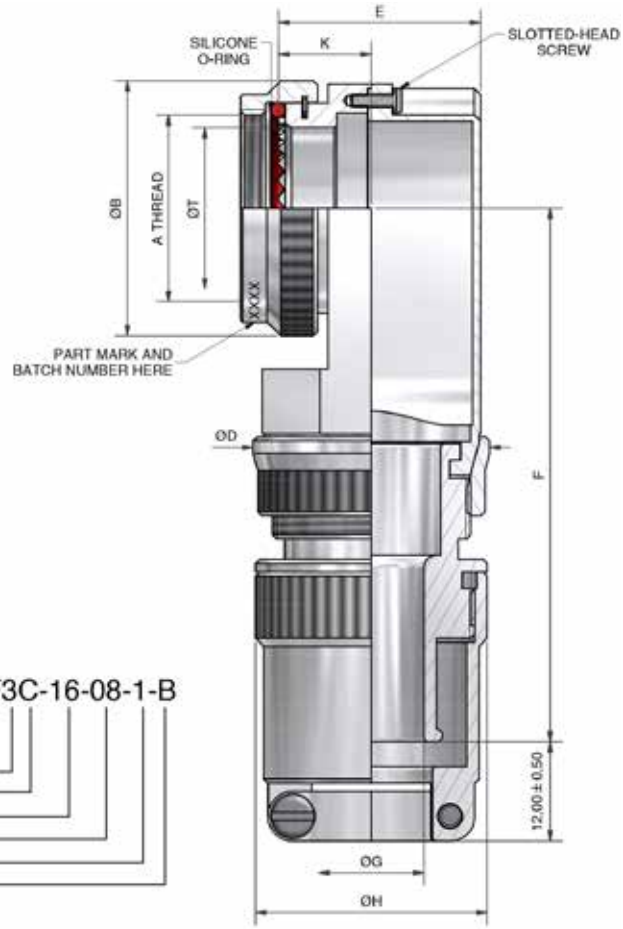


88F3C-16-08-1-B

- SERIES
- CONNECTOR INTERFACE
- ANGLE (3 - 90°)
- COBRA HEAD STYLE
- DASH NO. (TABLE 1)
- ENTRY SIZE (TABLE 2)
- MATERIAL (TABLE 3)
- FINISH (TABLE 3)

TABLE 1

| DASH NO. | SHELL SIZE SERIES I | SHELL SIZE SERIES II | A THREAD | ØB MAX | ØT MIN | ØD MAX | E MAX | F MAX | K +/-0,5 | MAX ENTRY |
|---|---|---|---|---|---|---|---|---|---|---|
| 08 | 09 | 08 | 7/16-28 UNEF | 18,3 | 6,6 | 18,7 | 17,7 | 54,6 | 8,7 | 04 |
| 10 | 11 | 10 | 9/16-24 UNEF | 21,5 | 10,1 | 21,7 | 19,0 | 58,7 | 8,7 | 06 |
| 12 | 13 | 12 | 11/16-24 UNEF | 24,5 | 12,9 | 24,7 | 22,1 | 58,7 | 8,7 | 08 |
| 14 | 15 | 14 | 13/16-20 UNEF | 27,8 | 16,1 | 24,7 | 22,1 | 62,5 | 10,2 | 08 |
| 16 | 17 | 16 | 15/16-20 UNEF | 30,8 | 19,3 | 28,7 | 25,1 | 64,8 | 11,2 | 10 |
| 18 | 19 | 18 | 1 1/16-18 UNEF | 34,1 | 21,7 | 28,7 | 25,1 | 67,5 | 11,2 | 10 |
| 20 | 21 | 20 | 1 3/16-18 UNEF | 37,3 | 24,9 | 28,7 | 25,1 | 68,5 | 11,2 | 10 |
| 22 | 23 | 22 | 1 5/16-18 UNEF | 40,5 | 28,1 | 31,7 | 28,1 | 71,0 | 12,7 | 12 |
| 24 | 25 | 24 | 1 7/16-18 UNEF | 43,7 | 31,3 | 31,7 | 28,1 | 72,5 | 12,7 | 12 |

TABLE 2

| ENTRY SIZE | ØG MIN | ØH MAX |
|---|---|---|
| 03 | 4,77 | 20,2 |
| 04 | 6,35 | 21,8 |
| 05 | 7,92 | 23,4 |
| 06 | 9,52 | 25,0 |
| 07 | 11,10 | 26,5 |
| 08 | 12,70 | 28,0 |
| 09 | 14,27 | 29,7 |
| 10 | 15,88 | 31,3 |
| 11 | 17,47 | 33,0 |
| 12 | 19,05 | 34,6 |

TABLE 3

| CODE | MATERIAL / PLATING |
|---|---|
| 1-C | ALUMINIUM / ELECTROLESS NICKEL |
| 1-B | ALUMINIUM / CADMIUM OLIVE DRAB OVER ELECTROLESS NICKEL |
| 1-ZB | ALUMINIUM / ZINC COBALT OLIVE DRAB OVER ELECTROLESS NICKEL |
| 1-ZN | ALUMINIUM / ZINC NICKEL BLACK PASSIVATE OVER ELECTROLESS NICKEL |
| 4-J | STAINLESS STEEL / PASSIVATE |
| 2-Z | NICKEL ALUMINIUM BRONZE / SHOT BLAST NON REFLECTIVE |

LIST NOT EXHAUSTIVE, SEE PLATING TABLE FOR OTHER OPTIONS

**For tooling and assembly instructions see www.polamco.com**

Backshell supplied without Band (see page 349)
Sealing and strain relief achieved with Heat Shrink Boot (see page 354)
Adhesive if required for assembly (see page 352)
Screenbraid for EMC/RFI screening (see page 350)

DRAWING NOT TO SCALE, DIMENSIONS IN MM

SEE PAGES 18-26 FOR COMPLETE LIST OF AVAILABLE MATERIALS, FINISHES AND CONNECTOR INTERFACES
(DIMENSIONS, FORM AND O RING SUBJECT TO CHANGE DEPENDING ON BACKSHELL MATERIAL AND CONNECTOR INTERFACE)

THIS DRAWING IS THE PROPERTY OF POLAMCO LTD AND MUST NOT BE USED FOR COMMERCIAL PURPOSES WITHOUT WRITTEN CONSENT OF THE COMPANY

# 88H3C - Band-In-A-Can Cobra Head

## Interface H - MIL-DTL-38999 SERIES III & IV

Polamco

**Interconnect Solutions Worldwide**

BAND TERMINATION

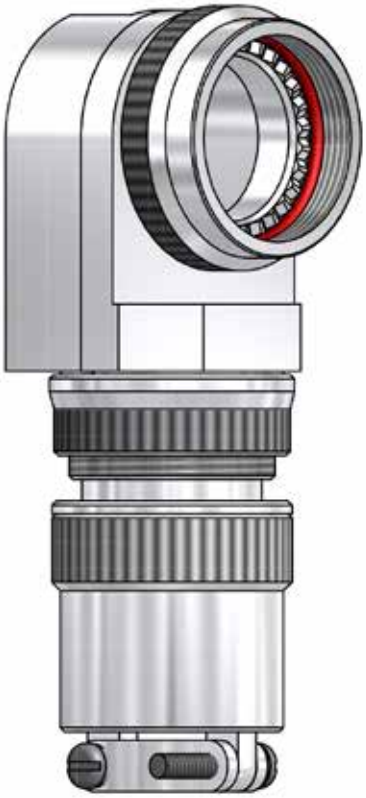

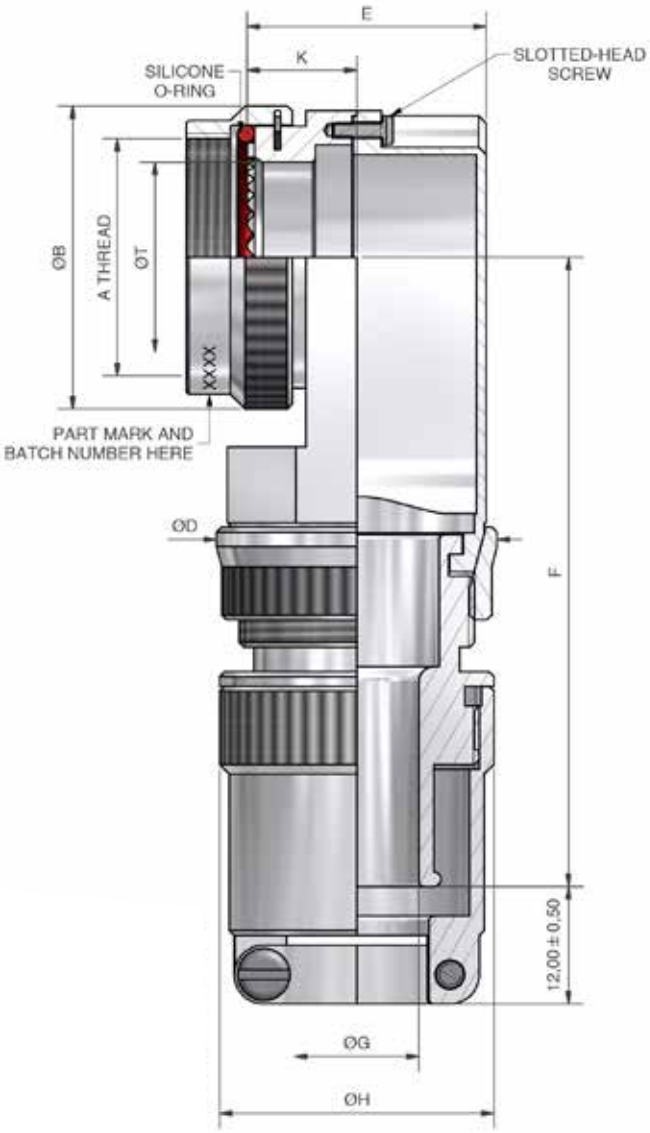


DRAWING NOT TO SCALE, DIMENSIONS IN MM

SEE PAGES 18-26 FOR COMPLETE LIST OF AVAILABLE MATERIALS, FINISHES AND CONNECTOR INTERFACES
(DIMENSIONS, FORM AND O RING SUBJECT TO CHANGE DEPENDING ON BACKSHELL MATERIAL AND CONNECTOR INTERFACE)



THIS DRAWING IS THE PROPERTY OF POLAMCO LTD AND MUST NOT BE USED FOR COMMERCIAL PURPOSES WITHOUT WRITTEN CONSENT OF THE COMPANY

# 88H3C - Band-In-A-Can Cobra Head

## Interface H - MIL-DTL-38999 SERIES III & IV

Polamco

**Interconnect Solutions Worldwide**



TABLE 1

| SHELL SIZE | A THREAD | ØB MAX | ØT MIN | ØD MAX | E MAX | F MAX | K +/-0,5 | MAX ENTRY |
|---|---|---|---|---|---|---|---|---|
| 09 | M12 x 1.0 | 18,0 | 6,7 | 18,7 | 17,7 | 54,6 | 8,7 | 04 |
| 11 | M15 x 1.0 | 21,0 | 10,2 | 21,7 | 19,0 | 58,7 | 8,7 | 06 |
| 13 | M18 x 1.0 | 24,5 | 13,5 | 24,7 | 22,1 | 58,7 | 8,7 | 08 |
| 15 | M22 x 1.0 | 27,5 | 16,2 | 24,7 | 22,1 | 62,5 | 10,2 | 08 |
| 17 | M25 x 1.0 | 31,0 | 19,4 | 28,7 | 25,1 | 64,8 | 11,2 | 10 |
| 19 | M28 x 1.0 | 34,0 | 21,8 | 28,7 | 25,1 | 67,5 | 11,2 | 10 |
| 21 | M31 x 1.0 | 37,0 | 25,1 | 28,7 | 25,1 | 68,5 | 11,2 | 10 |
| 23 | M34 x 1.0 | 40,0 | 28,2 | 31,7 | 28,1 | 71,0 | 12,7 | 12 |
| 25 | M37 x 1.0 | 43,5 | 31,4 | 31,7 | 28,1 | 72,5 | 12,7 | 12 |

TABLE 2

| ENTRY SIZE | ØG MIN | ØH MAX |
|---|---|---|
| 03 | 4,77 | 20,2 |
| 04 | 6,35 | 21,8 |
| 05 | 7,92 | 23,4 |
| 06 | 9,52 | 25,0 |
| 07 | 11,10 | 26,5 |
| 08 | 12,70 | 28,0 |
| 09 | 14,27 | 29,7 |
| 10 | 15,88 | 31,3 |
| 11 | 17,47 | 33,0 |
| 12 | 19,05 | 34,6 |

TABLE 3

| CODE | MATERIAL / PLATING |
|---|---|
| 1-C | ALUMINIUM / ELECTROLESS NICKEL |
| 1-B | ALUMINIUM / CADMIUM OLIVE DRAB OVER ELECTROLESS NICKEL |
| 1-ZB | ALUMINIUM / ZINC COBALT OLIVE DRAB OVER ELECTROLESS NICKEL |
| 1-ZN | ALUMINIUM / ZINC NICKEL BLACK PASSIVATE OVER ELECTROLESS NICKEL |
| 4-J | STAINLESS STEEL / PASSIVATE |
| 2-Z | NICKEL ALUMINIUM BRONZE / SHOT BLAST NON REFLECTIVE |

LIST NOT EXHAUSTIVE, SEE PLATING TABLE FOR OTHER OPTIONS

88H3C-17-08-1-C

- SERIES
- CONNECTOR INTERFACE
- ANGLE (3 - 90°)
- COBRA HEAD STYLE
- SHELL SIZE (TABLE 1)
- ENTRY SIZE (TABLE 2)
- MATERIAL (TABLE 3)
- PLATING (TABLE 3)

**For tooling and assembly instructions see www.polamco.com**

Backshell supplied without Band (see page 349)
Sealing and strain relief achieved with Heat Shrink Boot (see page 354)
Adhesive if required for assembly (see page 352)
Screenbraid for EMC/RFI screening (see page 350)

DRAWING NOT TO SCALE, DIMENSIONS IN MM

SEE PAGES 18-26 FOR COMPLETE LIST OF AVAILABLE MATERIALS, FINISHES AND CONNECTOR INTERFACES
(DIMENSIONS, FORM AND O RING SUBJECT TO CHANGE DEPENDING ON BACKSHELL MATERIAL AND CONNECTOR INTERFACE)

THIS DRAWING IS THE PROPERTY OF POLAMCO LTD AND MUST NOT BE USED FOR COMMERCIAL PURPOSES WITHOUT WRITTEN CONSENT OF THE COMPANY

# 89F - Double Band-In-A-Can

## Interface F - MIL-DTL-38999 SERIES I

Polamco

**Interconnect Solutions Worldwide**

BAND TERMINATION

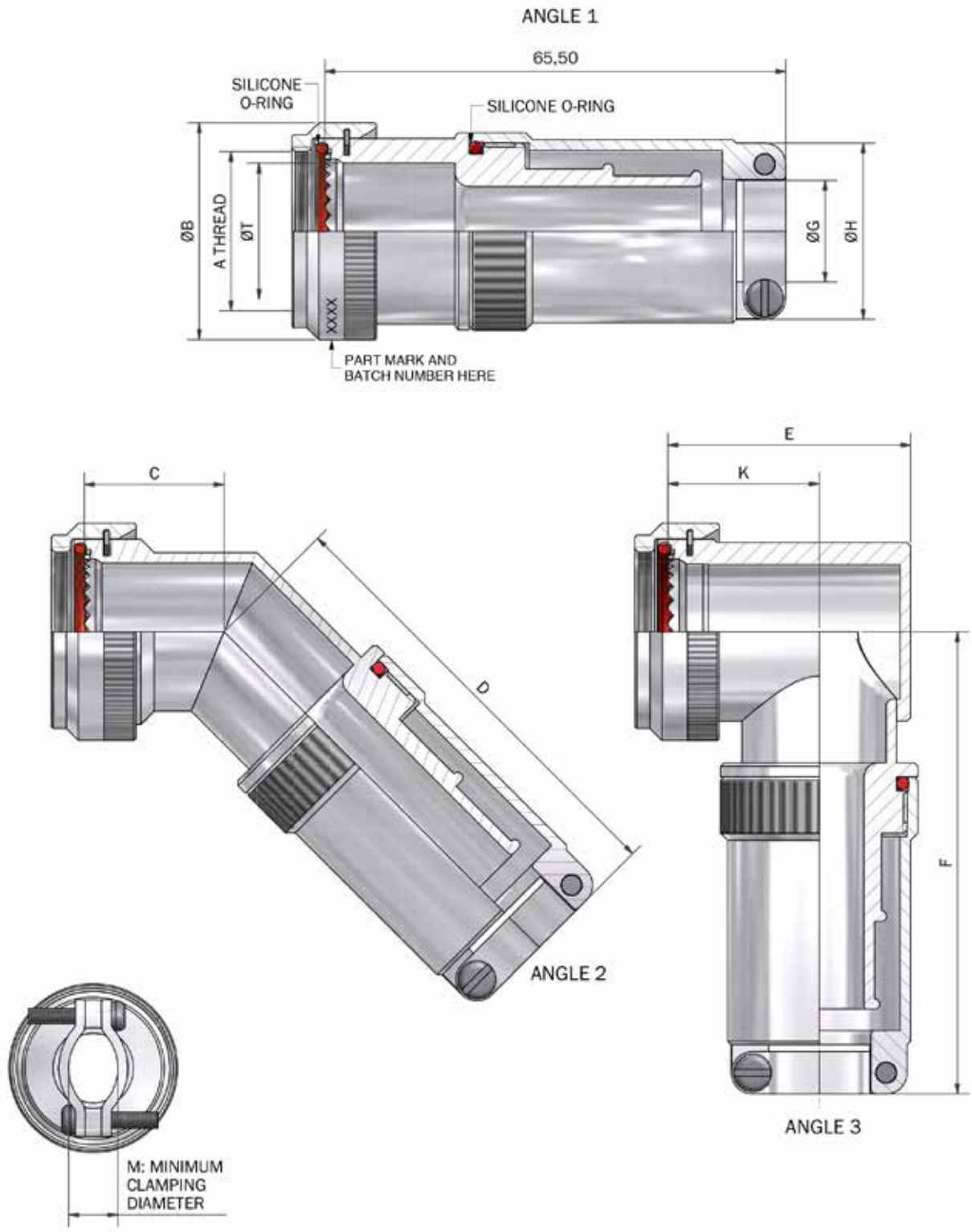


DRAWING NOT TO SCALE, DIMENSIONS IN MM

SEE PAGES 18-26 FOR COMPLETE LIST OF AVAILABLE MATERIALS, FINISHES AND CONNECTOR INTERFACES
(DIMENSIONS, FORM AND O RING SUBJECT TO CHANGE DEPENDING ON BACKSHELL MATERIAL AND CONNECTOR INTERFACE)



THIS DRAWING IS THE PROPERTY OF POLAMCO LTD AND MUST NOT BE USED FOR COMMERCIAL PURPOSES WITHOUT WRITTEN CONSENT OF THE COMPANY

# 89F - Double Band-In-A-Can

## Interface F - MIL-DTL-38999 SERIES I

Polamco

**Interconnect Solutions Worldwide**



TABLE 1

| SHELL SIZE | A THREAD | ØB MAX | ØT MIN | C ±0,5 | D MAX | E MAX | F MAX | K ±0,5 |
|---|---|---|---|---|---|---|---|---|
| 09 | 7/16-28 UNEF | 18,0 | 6,8 | 16,4 | 62,5 | 22,7 | 62,4 | 15,0 |
| 11 | 9/16-24 UNEF | 21,0 | 10,2 | 17,2 | 63,9 | 26,2 | 64,2 | 17,0 |
| 13 | 11/16-24 UNEF | 24,5 | 13,1 | 17,6 | 64,3 | 29,2 | 65,7 | 18,0 |
| 15 | 13/16-20 UNEF | 27,8 | 16,2 | 18,5 | 65,2 | 32,2 | 67,2 | 20,0 |
| 17 | 15/16-20 UNEF | 30,8 | 19,3 | 19,2 | 66,0 | 35,7 | 68,9 | 21,5 |
| 19 | 1 1/16-18 UNEF | 34,1 | 22,3 | 19,6 | 66,1 | 39,7 | 70,5 | 23,0 |
| 21 | 1 3/16-18 UNEF | 37,3 | 25,8 | 20,4 | 67,0 | 42,2 | 72,1 | 25,0 |
| 23 | 1 5/16-18 UNEF | 41,0 | 28,3 | 20,8 | 67,5 | 45,2 | 73,6 | 26,0 |
| 25 | 1 7/16-18 UNEF | 43,7 | 31,5 | 21,7 | 68,2 | 48,2 | 75,1 | 28,0 |

TABLE 2

| ENTRY SIZE | ØG MIN | ØH MAX | M ±0,5 |
|---|---|---|---|
| 03 | 4,7 | 17,2 | 6,8 |
| 04 | 6,3 | 18,8 | 6,7 |
| 05 | 7,9 | 20,4 | 7,8 |
| 06 | 9,5 | 22,0 | 7,9 |
| 07 | 11,1 | 23,5 | 8,6 |
| 08 | 12,7 | 25,0 | 9,0 |
| 09 | 14,2 | 26,7 | 10,2 |
| 10 | 15,8 | 28,3 | 10,4 |
| 11 | 17,4 | 30,0 | 12,5 |
| 12 | 19,0 | 31,5 | 12,4 |
| 13 | 20,6 | 33,0 | 15,0 |
| 14 | 22,2 | 34,7 | 15,4 |
| 15 | 23,8 | 36,4 | 16,8 |
| 16 | 25,4 | 37,8 | 17,3 |
| 17 | 27,0 | 39,4 | 18,8 |
| 18 | 28,6 | 41,0 | 19,5 |
| 19 | 30,2 | 42,6 | 23,9 |
| 20 | 31,8 | 44,2 | 22,4 |
| 21 | 33,3 | 45,8 | 23,8 |
| 22 | 35,0 | 47,3 | 24,4 |
| 23 | 36,5 | 50,9 | 26,4 |
| 24 | 38,1 | 50,9 | 26,4 |

TABLE 3

| CODE | FINISH |
|---|---|
| C | ELECTROLESS NICKEL |
| B | CADMIUM OLIVE DRAB OVER ELECTROLESS NICKEL |
| ZB | ZINC COBALT OLIVE DRAB OVER ELECTROLESS NICKEL |
| ZN | ZINC NICKEL BLACK PASSIVATE OVER ELECTROLESS NICKEL |

LIST NOT EXHAUSTIVE, SEE PLATING TABLE FOR OTHER OPTIONS

89F1-17-08-1-C

- SERIES
- CONNECTOR INTERFACE
- ANGLE
- SHELL SIZE (TABLE 1)
- ENTRY SIZE (TABLE 2)
- MATERIAL
  - ALUMINIUM ALLOY
- FINISH (TABLE 3)

**For tooling and assembly instructions see www.polamco.com**

Backshell supplied without Band (see page 349)
Sealing and strain relief achieved with Heat Shrink Boot (see page 354)
Adhesive if required for assembly (see page 352)
Screenbraid for EMC/RFI screening (see page 350)

DRAWING NOT TO SCALE, DIMENSIONS IN MM

SEE PAGES 18-26 FOR COMPLETE LIST OF AVAILABLE MATERIALS, FINISHES AND CONNECTOR INTERFACES
(DIMENSIONS, FORM AND O RING SUBJECT TO CHANGE DEPENDING ON BACKSHELL MATERIAL AND CONNECTOR INTERFACE)

THIS DRAWING IS THE PROPERTY OF POLAMCO LTD AND MUST NOT BE USED FOR COMMERCIAL PURPOSES WITHOUT WRITTEN CONSENT OF THE COMPANY

# 89F - Double Band-In-A-Can

## Interface F - MIL-DTL-38999 SERIES II

Polamco

**Interconnect Solutions Worldwide**

BAND TERMINATION

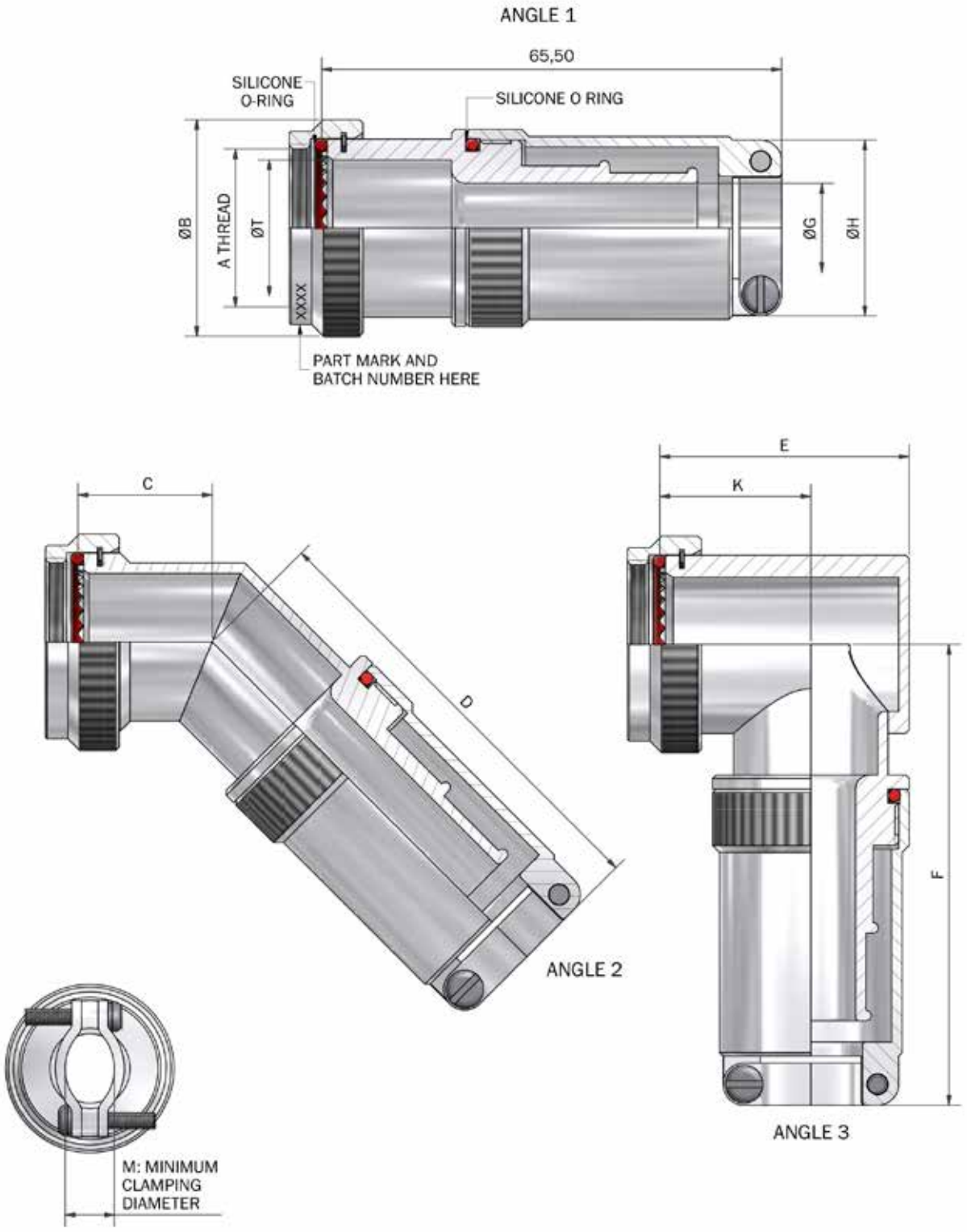


DRAWING NOT TO SCALE, DIMENSIONS IN MM

SEE PAGES 18-26 FOR COMPLETE LIST OF AVAILABLE MATERIALS, FINISHES AND CONNECTOR INTERFACES
(DIMENSIONS, FORM AND O RING SUBJECT TO CHANGE DEPENDING ON BACKSHELL MATERIAL AND CONNECTOR INTERFACE)



THIS DRAWING IS THE PROPERTY OF POLAMCO LTD AND MUST NOT BE USED FOR COMMERCIAL PURPOSES WITHOUT WRITTEN CONSENT OF THE COMPANY

# 89F - Double Band-In-A-Can

## Interface F - MIL-DTL-38999 SERIES II

Polamco

**Interconnect Solutions Worldwide**



TABLE 1

| SHELL SIZE | A THREAD | ØB MAX | ØT MIN | C ±0,5 | D MAX | E MAX | F MAX | K ±0,5 |
|---|---|---|---|---|---|---|---|---|
| 08 | 7/16-28 UNEF | 18,3 | 6,6 | 16,4 | 62,5 | 22,7 | 62,4 | 15,0 |
| 10 | 9/16-24 UNEF | 21,5 | 10,1 | 17,2 | 63,9 | 26,2 | 64,2 | 17,0 |
| 12 | 11/16-24 UNEF | 24,5 | 12,9 | 17,6 | 64,3 | 29,2 | 65,7 | 18,0 |
| 14 | 13/16-20 UNEF | 27,8 | 16,1 | 18,5 | 65,2 | 32,2 | 67,2 | 20,0 |
| 16 | 15/16-20 UNEF | 30,8 | 19,3 | 19,2 | 66,0 | 35,7 | 68,9 | 21,5 |
| 18 | 1 1/16-18 UNEF | 34,1 | 21,7 | 19,6 | 66,1 | 39,7 | 70,5 | 23,0 |
| 20 | 1 3/16-18 UNEF | 37,3 | 24,9 | 20,4 | 67,0 | 42,2 | 72,1 | 25,0 |
| 22 | 1 5/16-18 UNEF | 40,5 | 28,1 | 20,8 | 67,5 | 45,2 | 73,6 | 26,0 |
| 24 | 1 7/16-18 UNEF | 43,7 | 31,3 | 21,7 | 68,2 | 48,2 | 75,1 | 28,0 |

TABLE 2

| ENTRY SIZE | ØG MIN | ØH MAX | M ±0,5 |
|---|---|---|---|
| 03 | 4,7 | 17,2 | 6,8 |
| 04 | 6,3 | 18,8 | 6,7 |
| 05 | 7,9 | 20,4 | 7,8 |
| 06 | 9,5 | 22,0 | 7,9 |
| 07 | 11,1 | 23,5 | 8,6 |
| 08 | 12,7 | 25,0 | 9,0 |
| 09 | 14,2 | 26,7 | 10,2 |
| 10 | 15,8 | 28,3 | 10,4 |
| 11 | 17,4 | 30,0 | 12,5 |
| 12 | 19,0 | 31,5 | 12,4 |
| 13 | 20,6 | 33,0 | 15,0 |
| 14 | 22,2 | 34,7 | 15,4 |
| 15 | 23,8 | 36,4 | 16,8 |
| 16 | 25,4 | 37,8 | 17,3 |
| 17 | 27,0 | 39,4 | 18,8 |
| 18 | 28,6 | 41,0 | 19,5 |
| 19 | 30,2 | 42,6 | 23,9 |
| 20 | 31,8 | 44,2 | 22,4 |
| 21 | 33,3 | 45,8 | 23,8 |
| 22 | 35,0 | 47,3 | 24,4 |
| 23 | 36,5 | 50,9 | 26,4 |
| 24 | 38,1 | 50,9 | 26,4 |

TABLE 3

| CODE | FINISH |
|---|---|
| C | ELECTROLESS NICKEL |
| B | CADMIUM OLIVE DRAB OVER ELECTROLESS NICKEL |
| ZB | ZINC COBALT OLIVE DRAB OVER ELECTROLESS NICKEL |
| ZN | ZINC NICKEL BLACK PASSIVATE OVER ELECTROLESS NICKEL |

LIST NOT EXHAUSTIVE, SEE PLATING TABLE FOR OTHER OPTIONS

89F1-16-08-1-C

SERIES
CONNECTOR INTERFACE
ANGLE
SHELL SIZE (TABLE 1)
ENTRY SIZE (TABLE 2)
MATERIAL
ALUMINIUM ALLOY
FINISH (TABLE 3)

**For tooling and assembly instructions see www.polamco.com**

Backshell supplied without Band (see page 349)
Sealing and strain relief achieved with Heat Shrink Boot (see page 354)
Adhesive if required for assembly (see page 352)
Screenbraid for EMC/RFI screening (see page 350)

DRAWING NOT TO SCALE, DIMENSIONS IN MM

SEE PAGES 18-26 FOR COMPLETE LIST OF AVAILABLE MATERIALS, FINISHES AND CONNECTOR INTERFACES
(DIMENSIONS, FORM AND O RING SUBJECT TO CHANGE DEPENDING ON BACKSHELL MATERIAL AND CONNECTOR INTERFACE)

THIS DRAWING IS THE PROPERTY OF POLAMCO LTD AND MUST NOT BE USED FOR COMMERCIAL PURPOSES WITHOUT WRITTEN CONSENT OF THE COMPANY

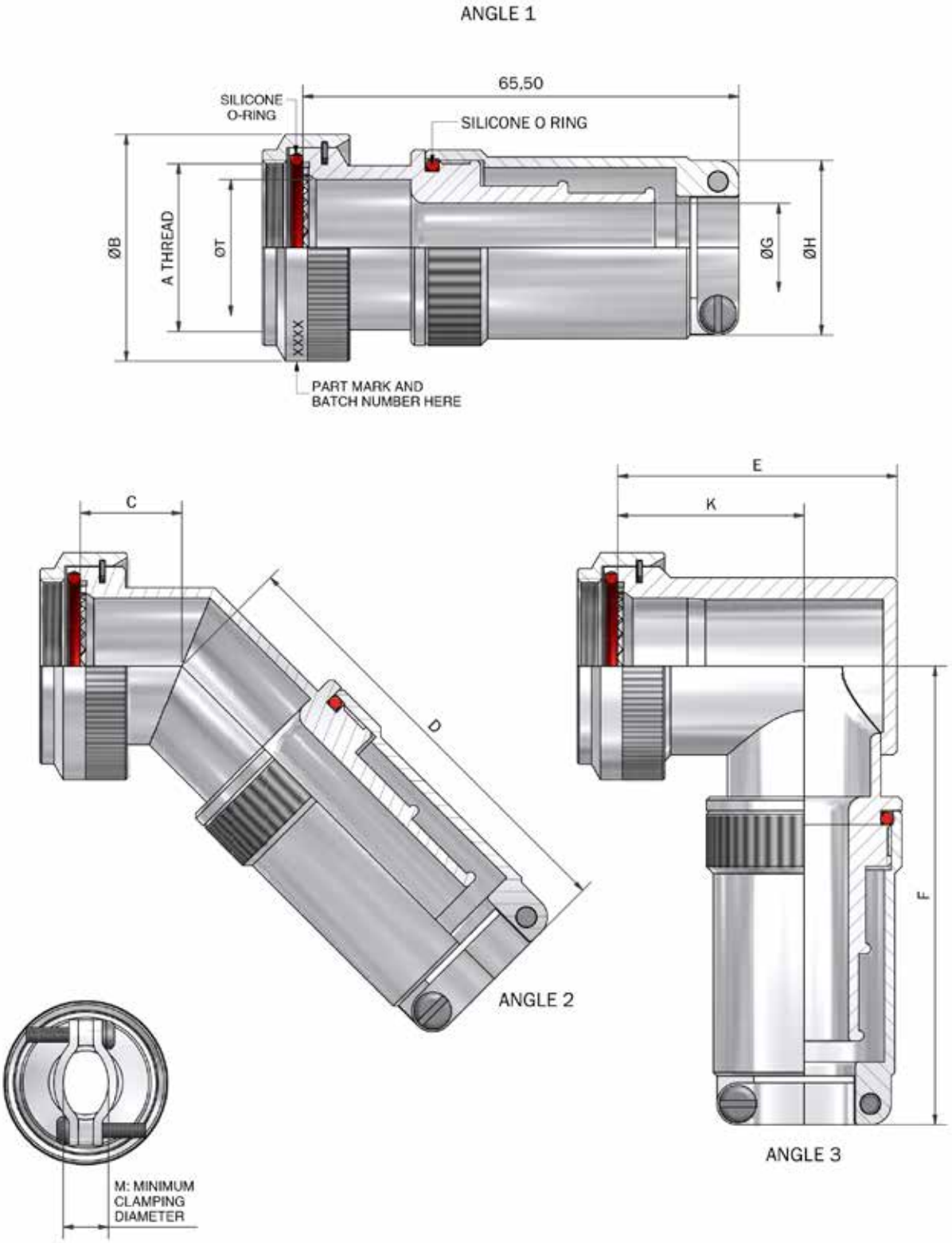


DRAWING NOT TO SCALE, DIMENSIONS IN MM

SEE PAGES 18-26 FOR COMPLETE LIST OF AVAILABLE MATERIALS, FINISHES AND CONNECTOR INTERFACES
(DIMENSIONS, FORM AND O RING SUBJECT TO CHANGE DEPENDING ON BACKSHELL MATERIAL AND CONNECTOR INTERFACE)




THIS DRAWING IS THE PROPERTY OF POLAMCO LTD AND MUST NOT BE USED FOR COMMERCIAL PURPOSES WITHOUT WRITTEN CONSENT OF THE COMPANY

# 89H - Double Band-In-A-Can

## Interface H - MIL-DTL-38999 SERIES III & IV

Polamco

**Interconnect Solutions Worldwide**



TABLE 1

| SHELL SIZE | A THREAD | ØB MAX | ØT MIN | C MAX | D MAX | E MAX | F MAX | K ±0,5 |
|---|---|---|---|---|---|---|---|---|
| 09 | M12 x 1.0 | 18,0 | 6,7 | 13,1 | 62,5 | 25.7 | 62,4 | 17,5 |
| 11 | M15 x 1.0 | 21,0 | 10,2 | 13,9 | 63,9 | 26.7 | 64,2 | 17,5 |
| 13 | M18 x 1.0 | 24,5 | 13,5 | 14,5 | 64,3 | 31.2 | 65,7 | 20,0 |
| 15 | M22 x 1.0 | 29,0 | 16,2 | 15,5 | 65,2 | 37.2 | 67,2 | 24,5 |
| 17 | M25 x 1.0 | 32,5 | 19,4 | 16,1 | 66,0 | 40.2 | 68,9 | 26,7 |
| 19 | M28 x 1.0 | 35,5 | 21,8 | 16,8 | 66,1 | 44.7 | 70,5 | 27,0 |
| 21 | M31 x 1.0 | 37,0 | 25,1 | 17,1 | 67,0 | 49.2 | 72,1 | 30,5 |
| 23 | M34 x 1.0 | 40,0 | 28,2 | 17,7 | 67,5 | 51.7 | 73,6 | 31,5 |
| 25 | M37 x 1.0 | 43,5 | 31,4 | 18,4 | 68,2 | 53.2 | 75,1 | 28,5 |

TABLE 2

| ENTRY SIZE | ØG MIN | ØH MAX | M ±0,5 |
|---|---|---|---|
| 03 | 4,7 | 17,2 | 6,8 |
| 04 | 6,3 | 18,8 | 6,7 |
| 05 | 7,9 | 20,4 | 7,8 |
| 06 | 9,5 | 22,0 | 7,9 |
| 07 | 11,1 | 23,5 | 8,6 |
| 08 | 12,7 | 25,0 | 9,0 |
| 09 | 14,2 | 26,7 | 10,2 |
| 10 | 15,8 | 28,3 | 10,4 |
| 11 | 17,4 | 30,0 | 12,5 |
| 12 | 19,0 | 31,5 | 12,4 |
| 13 | 20,6 | 33,0 | 15,0 |
| 14 | 22,2 | 34,7 | 15,4 |
| 15 | 23,8 | 36,4 | 16,8 |
| 16 | 25,4 | 37,8 | 17,3 |
| 17 | 27,0 | 39,4 | 18,8 |
| 18 | 28,6 | 41,0 | 19,5 |
| 19 | 30,2 | 42,6 | 23,9 |
| 20 | 31,8 | 44,2 | 22,4 |
| 21 | 33,3 | 45,8 | 23,8 |
| 22 | 35,0 | 47,3 | 24,4 |
| 23 | 36,5 | 50,9 | 26,4 |
| 24 | 38,1 | 50,9 | 26,4 |

TABLE 3

| CODE | FINISH |
|---|---|
| C | ELECTROLESS NICKEL |
| B | CADMIUM OLIVE DRAB OVER ELECTROLESS NICKEL |
| ZB | ZINC COBALT OLIVE DRAB OVER ELECTROLESS NICKEL |
| ZN | ZINC NICKEL BLACK PASSIVATE OVER ELECTROLESS NICKEL |

LIST NOT EXHAUSTIVE, SEE PLATING TABLE FOR OTHER OPTIONS

89H1-17-08-1-C

SERIES
CONNECTOR INTERFACE
ANGLE
SHELL SIZE (TABLE 1)
ENTRY SIZE (TABLE 2)
MATERIAL
ALUMINIUM ALLOY
FINISH (TABLE 3)

**For tooling and assembly instructions see www.polamco.com**

Backshell supplied without Band (see page 349)
Sealing and strain relief achieved with Heat Shrink Boot (see page 354)
Adhesive if required for assembly (see page 352)
Screenbraid for EMC/RFI screening (see page 350)

DRAWING NOT TO SCALE, DIMENSIONS IN MM

SEE PAGES 18-26 FOR COMPLETE LIST OF AVAILABLE MATERIALS, FINISHES AND CONNECTOR INTERFACES
(DIMENSIONS, FORM AND O RING SUBJECT TO CHANGE DEPENDING ON BACKSHELL MATERIAL AND CONNECTOR INTERFACE)

THIS DRAWING IS THE PROPERTY OF POLAMCO LTD AND MUST NOT BE USED FOR COMMERCIAL PURPOSES WITHOUT WRITTEN CONSENT OF THE COMPANY

# PVG1AH1 - Band Termination

## Interface H - MIL-DTL-38999 SERIES III & IV

## VG APPROVED

Polamco

**Interconnect Solutions Worldwide**

BAND TERMINATION

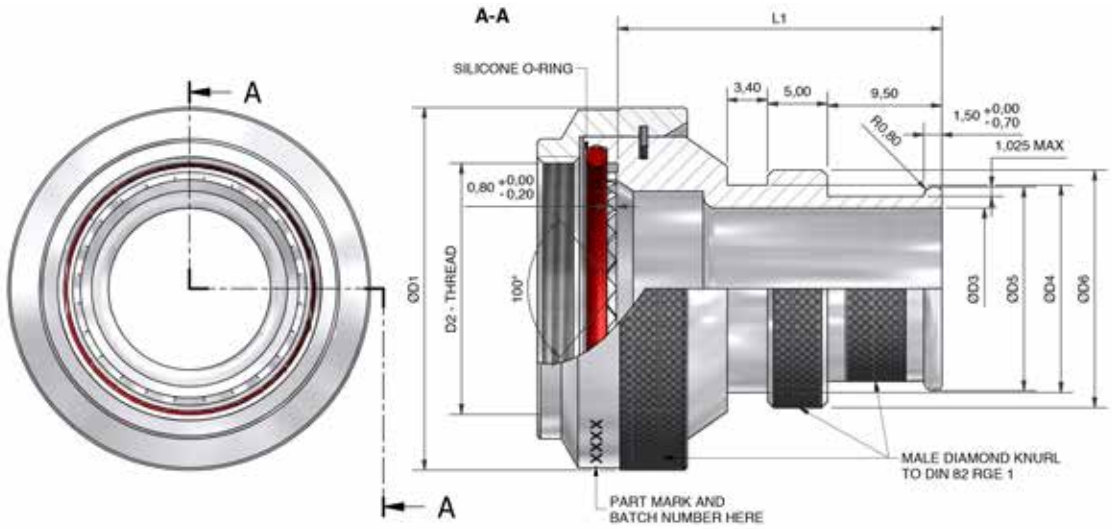


### VG PART NUMBERING

VG95319-1011A001A

- VG SERIES
- DASH NUMBER
- MATERIAL AND FINISH OPTION
  - A = ALUMINIUM ALLOY - OLIVE DRAB OVER ELECTROLESS NICKEL
  - B = ALUMINIUM BRONZE - SHOT BLAST
  - S = STAINLESS STEEL - PASSIVATED

### POLAMCO PART NUMBERING

PVG1AH1-001-1-B

- POLAMCO SERIES
- INTERFACE
- ANGLE (1=STRAIGHT)
- DASH NUMBER (TABLE 1)
- MATERIAL
- FINISH (TABLE 2)

ANY OPTIONS OUTSIDE THOSE POSSIBLE WITH VG PART NUMBER ARE AVAILABLE BUT WILL NOT BE VG APPROVED PARTS. FOR FULL LIST OF MATERIAL AND PLATING OPTIONS PLEASE VISIT OUR WEBSITE

TABLE 1

| DASH NO. | SHELL SIZE | ØD1 MAX | D2 | ØD3 | ØD3 TOL | ØD4 ± 0,1 | ØD5 ± 0,1 | ØD6 ± 0,1 | L1 ± 0,8 | NO. OF TEETH | MASS (g) MAX |
|---|---|---|---|---|---|---|---|---|---|---|---|
| 001 | 09 | 19,5 | M12 X 1 | 9,0 | ± 0,025 | 12,8 | 12,5 | 15,3 | 27,0 | 12,0 | 20,0 |
| 011 | 11 | 23,0 | M15 X 1 | 9,5 | ± 0,2 | 13,3 | 13,0 | 15,8 | 38,0 | 16,0 | 20,0 |
| 002 | 11 | 23,0 | M15 X 1 | 12,5 | ± 0,025 | 16,3 | 16,0 | 18,8 | 27,0 | 16,0 | 20,0 |
| 012 | 13 | 25,9 | M18 X 1 | 9,5 | ± 0,2 | 13,3 | 13,0 | 15,8 | 38,0 | 20,0 | 20,0 |
| 003 | 13 | 25,9 | M18 X 1 | 12,0 | ± 0,025 | 15,8 | 15,5 | 18,3 | 27,0 | 20,0 | 20,0 |
| 013 | 15 | 30,2 | M22 X 1 | 9,5 | ± 0,2 | 13,3 | 13,0 | 15,8 | 38,0 | 24,0 | 20,0 |
| 004 | 15 | 30,2 | M22 X 1 | 13,5 | ± 0,025 | 17,3 | 17,0 | 19,8 | 27,0 | 24,0 | 20,0 |
| 005 | 17 | 33,0 | M25 X 1 | 12,8 | ± 0,025 | 16,6 | 16,3 | 19,1 | 38,0 | 28,0 | 30,0 |
| 006 | 17 | 33,0 | M25 X 1 | 23,5 | ± 0,025 | 27,3 | 26,9 | 29,8 | 38,0 | 28,0 | 30,0 |
| 014 | 19 | 35,9 | M28 X 1 | 17,5 | ± 0,2 | 21,3 | 21,0 | 23,8 | 38,0 | 32,0 | 30,0 |
| 007 | 19 | 35,9 | M28 X 1 | 18,0 | ± 0,025 | 21,8 | 21,6 | 24,3 | 38,0 | 32,0 | 30,0 |
| 015 | 21 | 39,2 | M31 X 1 | 13,0 | ± 0,2 | 16,8 | 16,5 | 19,3 | 38,0 | 36,0 | 30,0 |
| 016 | 21 | 39,2 | M31 X 1 | 16,0 | ± 0,2 | 19,8 | 19,5 | 22,3 | 38,0 | 36,0 | 30,0 |
| 008 | 21 | 39,2 | M31 X 1 | 19,0 | ± 0,025 | 22,8 | 22,6 | 25,3 | 38,0 | 36,0 | 30,0 |
| 017 | 23 | 42,4 | M34 X 1 | 19,0 | ± 0,2 | 22,8 | 22,5 | 25,3 | 38,0 | 40,0 | 30,0 |
| 009 | 23 | 42,4 | M34 X 1 | 23,0 | ± 0,025 | 26,8 | 26,4 | 29,3 | 38,0 | 40,0 | 40,0 |
| 018 | 25 | 45,0 | M37 X 1 | 16,0 | ± 0,2 | 19,8 | 19,5 | 22,3 | 38,0 | 44,0 | 40,0 |
| 019 | 25 | 45,0 | M37 X 1 | 19,0 | ± 0,2 | 22,8 | 22,5 | 25,3 | 38,0 | 44,0 | 40,0 |
| 020 | 25 | 45,0 | M37 X 1 | 22,5 | ± 0,2 | 26,3 | 26,0 | 28,8 | 38,0 | 44,0 | 40,0 |
| 010 | 25 | 45,0 | M37 X 1 | 28,5 | ± 0,025 | 32,3 | 32,0 | 34,8 | 38,0 | 44,0 | 40,0 |

TABLE 2

| CODE | FINISH |
|---|---|
| C | ELECTROLESS NICKEL |
| B | CADMIUM OLIVE DRAB OVER ELECTROLESS NICKEL |
| ZB | ZINC COBALT OLIVE DRAB OVER ELECTROLESS NICKEL |
| ZN | ZINC NICKEL BLACK PASSIVATE OVER ELECTROLESS NICKEL |

LIST NOT EXHAUSTIVE, SEE PLATING TABLE FOR OTHER OPTIONS

**For tooling and assembly instructions see www.polamco.com**

Backshell supplied without Band (see page 349)
Sealing and strain relief achieved with Heat Shrink Boot (see page 354)
Adhesive if required for assembly (see page 352)
Screenbraid for EMC/RFI screening (see page 350)

DRAWING NOT TO SCALE, DIMENSIONS IN MM

SEE PAGES 18-26 FOR COMPLETE LIST OF AVAILABLE MATERIALS, FINISHES AND CONNECTOR INTERFACES
(DIMENSIONS, FORM AND O RING SUBJECT TO CHANGE DEPENDING ON BACKSHELL MATERIAL AND CONNECTOR INTERFACE)



THIS DRAWING IS THE PROPERTY OF POLAMCO LTD AND MUST NOT BE USED FOR COMMERCIAL PURPOSES WITHOUT WRITTEN CONSENT OF THE COMPANY

# PVG1BH3 - Band Termination (90°)

## Interface H - MIL-DTL-38999 SERIES III & IV

## VG APPROVED

Polamco

**Interconnect Solutions Worldwide**

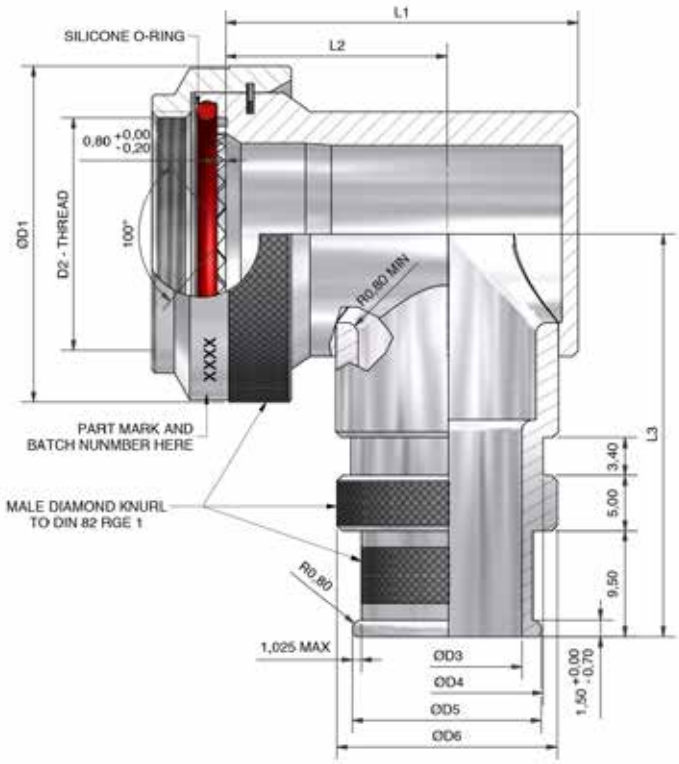


### VG PART NUMBERING

**VG95319-1011B001A**

- VG SERIES
- DASH NUMBER
- MATERIAL AND FINISH OPTION
  - A = ALUMINIUM ALLOY - OLIVE DRAB OVER ELECTROLESS NICKEL
  - B = ALUMINIUM BRONZE - SHOT BLAST
  - S = STAINLESS STEEL - PASSIVATED

### POLAMCO PART NUMBERING

**PVG1BH3-001-1-B**

- POLAMCO SERIES
- INTERFACE
- ANGLE (3=90°)
- DASH NUMBER (TABLE 1)
- MATERIAL
- FINISH (TABLE 2)

ANY OPTIONS OUTSIDE THOSE POSSIBLE WITH VG PART NUMBER ARE AVAILABLE BUT WILL NOT BE VG APPROVED PARTS. FOR FULL LIST OF MATERIAL AND PLATING OPTIONS PLEASE VISIT OUR WEBSITE

TABLE 1

| DASH NO. | SHELL SIZE | ØD1 MAX | D2 | ØD3 ± 0,025 | ØD4 ± 0,1 | ØD5 ± 0,1 | ØD6 ± 0,1 | L1 MAX | L2 MAX | L3 MAX | NO. OF TEETH | MASS (g) MAX |
|---|---|---|---|---|---|---|---|---|---|---|---|---|
| 001 | 09 | 19,5 | M12 X 1 | 9,0 | 12,8 | 12,5 | 15,3 | 24,0 | 16,4 | 31,2 | 12,0 | 30,0 |
| 002 | 11 | 23,0 | M15 X 1 | 12,5 | 16,3 | 16,0 | 18,8 | 27,8 | 18,4 | 32,8 | 16,0 | 30,0 |
| 003 | 13 | 25,9 | M18 X 1 | 12,0 | 15,8 | 15,5 | 18,3 | 29,5 | 20,0 | 34,2 | 20,0 | 35,0 |
| 004 | 15 | 30,2 | M22 X 1 | 13,5 | 17,3 | 17,0 | 19,8 | 31,9 | 21,2 | 36,4 | 24,0 | 45,0 |
| 005 | 17 | 33,0 | M25 X 1 | 12,8 | 16,6 | 16,3 | 19,1 | 35,0 | 22,8 | 37,8 | 28,0 | 55,0 |
| 006 | 17 | 33,0 | M25 X 1 | 23,5 | 27,3 | 26,9 | 29,8 | 37,7 | 22,8 | 37,8 | 28,0 | 55,0 |
| 007 | 19 | 35,9 | M28 X 1 | 18,0 | 21,8 | 21,6 | 24,3 | 37,4 | 24,0 | 39,2 | 32,0 | 65,0 |
| 008 | 21 | 39,2 | M31 X 1 | 19,0 | 22,8 | 22,6 | 25,3 | 40,6 | 25,6 | 40,9 | 36,0 | 75,0 |
| 009 | 23 | 42,4 | M34 X 1 | 23,0 | 26,8 | 26,4 | 29,3 | 43,8 | 27,1 | 42,5 | 40,0 | 85,0 |
| 010 | 25 | 45,0 | M37 X 1 | 28,5 | 32,3 | 32,0 | 34,8 | 46,3 | 28,4 | 43,8 | 44,0 | 95,0 |

TABLE 2

| CODE | FINISH |
|---|---|
| C | ELECTROLESS NICKEL |
| B | CADMIUM OLIVE DRAB OVER ELECTROLESS NICKEL |
| ZB | ZINC COBALT OLIVE DRAB OVER ELECTROLESS NICKEL |
| ZN | ZINC NICKEL BLACK PASSIVATE OVER ELECTROLESS NICKEL |

LIST NOT EXHAUSTIVE, SEE PLATING TABLE FOR OTHER OPTIONS

**For tooling and assembly instructions see www.polamco.com**

Backshell supplied without Band (see page 349)
Sealing and strain relief achieved with Heat Shrink Boot (see page 354)
Adhesive if required for assembly (see page 352)
Screenbraid for EMC/RFI screening (see page 350)

DRAWING NOT TO SCALE, DIMENSIONS IN MM

SEE PAGES 18-26 FOR COMPLETE LIST OF AVAILABLE MATERIALS, FINISHES AND CONNECTOR INTERFACES
(DIMENSIONS, FORM AND O RING SUBJECT TO CHANGE DEPENDING ON BACKSHELL MATERIAL AND CONNECTOR INTERFACE)

THIS DRAWING IS THE PROPERTY OF POLAMCO LTD AND MUST NOT BE USED FOR COMMERCIAL PURPOSES WITHOUT WRITTEN CONSENT OF THE COMPANY

# PVG1GH1 - Band Termination

## Interface H - MIL-DTL-38999 SERIES III & IV

## VG APPROVED

Polamco

**Interconnect Solutions Worldwide**

BAND TERMINATION

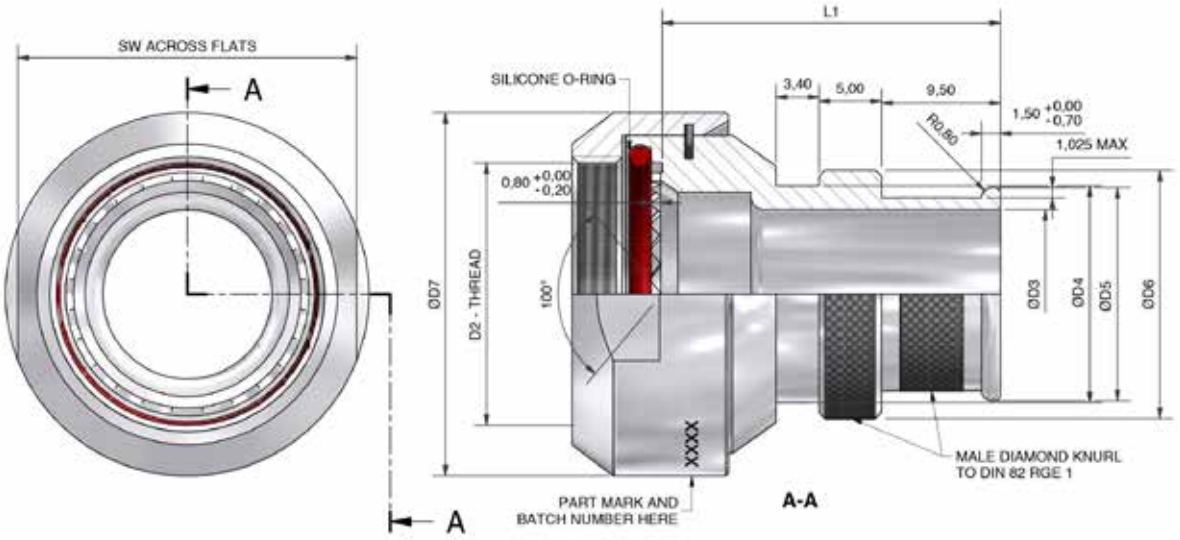


### VG PART NUMBERING

VG95319-1011G001A

- VG SERIES
- DASH NUMBER
- MATERIAL AND FINISH OPTION
  - A = ALUMINIUM ALLOY - OLIVE DRAB OVER ELECTROLESS NICKEL
  - B = ALUMINIUM BRONZE - SHOT BLAST
  - S = STAINLESS STEEL - PASSIVATED

### POLAMCO PART NUMBERING

PVG1GH1-001-1-B

- POLAMCO SERIES
- INTERFACE
- ANGLE (1 = STRAIGHT)
- DASH NUMBER (TABLE 1)
- MATERIAL
- FINISH (TABLE 2)

ANY OPTIONS OUTSIDE THOSE POSSIBLE WITH VG PART NUMBER ARE AVAILABLE BUT WILL NOT BE VG APPROVED PARTS. FOR FULL LIST OF MATERIAL AND PLATING OPTIONS PLEASE VISIT OUR WEBSITE

TABLE 1

| DASH NO. | SHELL SIZE | D2 | ØD3 | ØD3 TOL. | ØD4 ± 0,1 | ØD5 ± 0,1 | ØD6 ± 0,1 | ØD7 ± 0,2 | α ± 1 | SW +0/-0,2 | L1 ± 0,8 | NO. OF TEETH | MASS (g) MAX |
|---|---|---|---|---|---|---|---|---|---|---|---|---|---|
| 001 | 09 | M12 X 1 | 9,0 | ± 0,025 | 12,8 | 12,5 | 15,3 | 19,0 | 35° | 17,0 | 27,0 | 12,0 | 20,0 |
| 011 | 11 | M15 X 1 | 9,5 | ± 0,2 | 13,3 | 13,0 | 15,8 | 22,0 | 37° | 20,0 | 38,0 | 16,0 | 20,0 |
| 002 | 11 | M15 X 1 | 12,5 | ± 0,025 | 16,3 | 16,0 | 18,8 | 22,0 | 37° | 20,0 | 27,0 | 16,0 | 20,0 |
| 012 | 13 | M18 X 1 | 9,5 | ± 0,2 | 13,3 | 13,0 | 15,8 | 25,0 | 37° | 23,0 | 38,0 | 20,0 | 20,0 |
| 003 | 13 | M18 X 1 | 12,0 | ± 0,025 | 15,8 | 15,5 | 18,3 | 25,0 | 37° | 23,0 | 27,0 | 20,0 | 20,0 |
| 013 | 15 | M22 X 1 | 9,5 | ± 0,2 | 13,3 | 13,0 | 15,8 | 29,0 | 37° | 27,0 | 38,0 | 24,0 | 20,0 |
| 004 | 15 | M22 X 1 | 13,5 | ± 0,025 | 17,3 | 17,0 | 19,8 | 29,0 | 37° | 27,0 | 27,0 | 24,0 | 20,0 |
| 005 | 17 | M25 X 1 | 12,8 | ± 0,025 | 16,6 | 16,3 | 19,1 | 32,0 | 37° | 30,0 | 38,0 | 28,0 | 30,0 |
| 006 | 17 | M25 X 1 | 23,5 | ± 0,025 | 27,3 | 26,9 | 29,8 | 32,0 | 37° | 30,0 | 38,0 | 28,0 | 30,0 |
| 014 | 19 | M28 X 1 | 17,5 | ± 0,2 | 21,3 | 21,0 | 23,8 | 36,0 | 40° | 34,0 | 38,0 | 32,0 | 30,0 |
| 007 | 19 | M28 X 1 | 18,0 | ± 0,025 | 21,8 | 21,6 | 24,3 | 36,0 | 40° | 34,0 | 38,0 | 32,0 | 30,0 |
| 015 | 21 | M31 X 1 | 13,0 | ± 0,2 | 16,8 | 16,5 | 19,3 | 39,0 | 40° | 37,0 | 38,0 | 36,0 | 30,0 |
| 016 | 21 | M31 X 1 | 16,0 | ± 0,2 | 19,8 | 19,5 | 22,3 | 39,0 | 40° | 37,0 | 38,0 | 36,0 | 30,0 |
| 008 | 21 | M31 X 1 | 19,0 | ± 0,025 | 22,8 | 22,6 | 25,3 | 39,0 | 40° | 37,0 | 38,0 | 36,0 | 30,0 |
| 017 | 23 | M34 X 1 | 19,0 | ± 0,2 | 22,8 | 22,5 | 25,3 | 43,0 | 40° | 41,0 | 38,0 | 40,0 | 30,0 |
| 009 | 23 | M34 X 1 | 23,0 | ± 0,025 | 26,8 | 26,4 | 29,3 | 43,0 | 40° | 41,0 | 38,0 | 40,0 | 40,0 |
| 018 | 25 | M37 X 1 | 16,0 | ± 0,2 | 19,8 | 19,5 | 22,3 | 46,0 | 40° | 44,0 | 38,0 | 44,0 | 40,0 |
| 019 | 25 | M37 X 1 | 19,0 | ± 0,2 | 22,8 | 22,5 | 25,3 | 46,0 | 40° | 44,0 | 38,0 | 44,0 | 40,0 |
| 020 | 25 | M37 X 1 | 22,5 | ± 0,2 | 26,3 | 26,0 | 28,8 | 46,0 | 40° | 44,0 | 38,0 | 44,0 | 40,0 |
| 010 | 25 | M37 X 1 | 28,5 | ± 0,025 | 32,3 | 32,0 | 34,8 | 46,0 | 40° | 44,0 | 38,0 | 44,0 | 40,0 |

TABLE 2

| CODE | FINISH |
|---|---|
| C | ELECTROLESS NICKEL |
| B | CADMIUM OLIVE DRAB OVER ELECTROLESS NICKEL |
| ZB | ZINC COBALT OLIVE DRAB OVER ELECTROLESS NICKEL |
| ZN | ZINC NICKEL BLACK PASSIVATE OVER ELECTROLESS NICKEL |

LIST NOT EXHAUSTIVE, SEE PLATING TABLE FOR OTHER OPTIONS

**For tooling and assembly instructions see www.polamco.com**

Backshell supplied without Band (see page 349)
Sealing and strain relief achieved with Heat Shrink Boot (see page 354)
Adhesive if required for assembly (see page 352)
Screenbraid for EMC/RFI screening (see page 350)

DRAWING NOT TO SCALE, DIMENSIONS IN MM

SEE PAGES 18-26 FOR COMPLETE LIST OF AVAILABLE MATERIALS, FINISHES AND CONNECTOR INTERFACES
(DIMENSIONS, FORM AND O RING SUBJECT TO CHANGE DEPENDING ON BACKSHELL MATERIAL AND CONNECTOR INTERFACE)



THIS DRAWING IS THE PROPERTY OF POLAMCO LTD AND MUST NOT BE USED FOR COMMERCIAL PURPOSES WITHOUT WRITTEN CONSENT OF THE COMPANY

# PVG1HH3 - Band Termination (90°)

## Interface H - MIL-DTL-38999 SERIES III & IV

## VG APPROVED

Polamco

**Interconnect Solutions Worldwide**



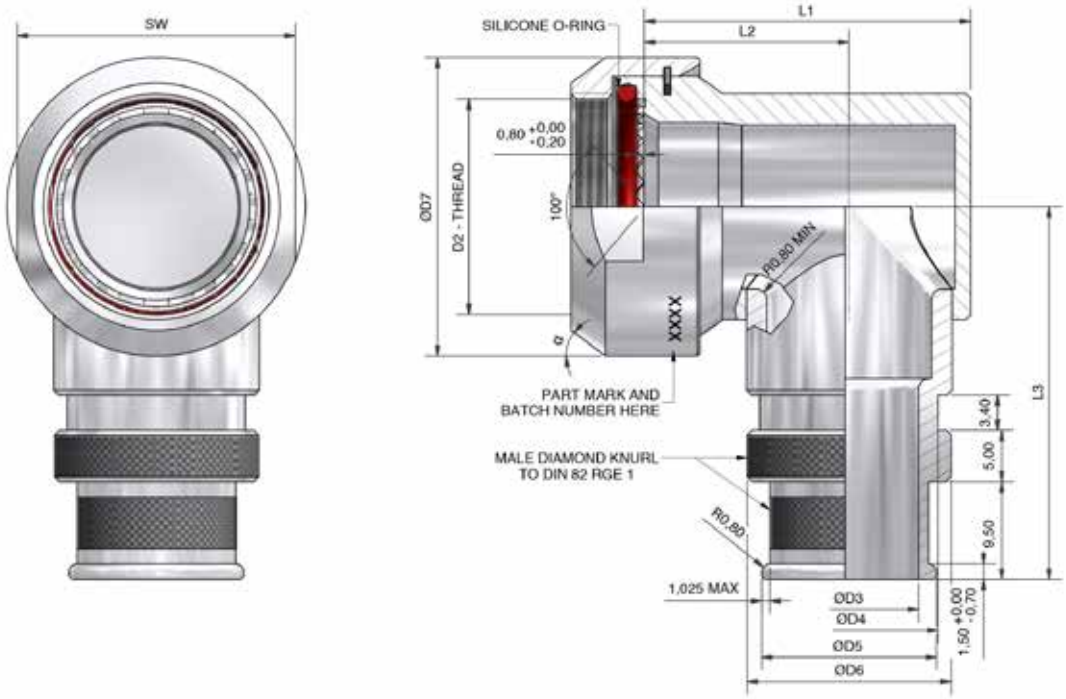


### VG PART NUMBERING

VG95319-1011H001A

- VG SERIES
- DASH NUMBER
- MATERIAL AND FINISH OPTION
  - A = ALUMINIUM ALLOY - OLIVE DRAB OVER ELECTROLESS NICKEL
  - B = ALUMINIUM BRONZE - SHOT BLAST
  - S = STAINLESS STEEL - PASSIVATED

### POLAMCO PART NUMBERING

PVG1HH3-001-1-B

- POLAMCO SERIES
- INTERFACE
- ANGLE (3 = 90°)
- DASH NUMBER (TABLE 1)
- MATERIAL
- FINISH (TABLE 2)

ANY OPTIONS OUTSIDE THOSE POSSIBLE WITH VG PART NUMBER ARE AVAILABLE BUT WILL NOT BE VG APPROVED PARTS. FOR FULL LIST OF MATERIAL AND PLATING OPTIONS PLEASE VISIT OUR WEBSITE

TABLE 1

| DASH NO. | SHELL SIZE | D2 | ØD3 | ØD3 TOL. | ØD4 ± 0,1 | ØD5 ± 0,1 | ØD6 ± 0,1 | ØD7 ± 0,2 | α ± 1° | SW +0/-0,2 | L1 MAX | L2 MAX | L3 MAX | NO. OF TEETH | MASS (g) MAX |
|---|---|---|---|---|---|---|---|---|---|---|---|---|---|---|---|
| 001 | 9 | M12 X 1 | 9,0 | ± 0,025 | 12,8 | 12,5 | 15,3 | 19,0 | 35° | 17,0 | 24,0 | 16,4 | 31,2 | 12,0 | 30,0 |
| 002 | 11 | M15 X 1 | 12,5 | ± 0,025 | 16,3 | 16,0 | 18,8 | 22,0 | 37° | 20,0 | 27,8 | 18,4 | 32,8 | 16,0 | 30,0 |
| 003 | 13 | M18 X 1 | 12,0 | ± 0,025 | 15,8 | 15,5 | 18,3 | 22,0 | 37° | 23,0 | 29,5 | 20,0 | 34,2 | 20,0 | 35,0 |
| 004 | 15 | M22 X 1 | 13,5 | ± 0,025 | 17,3 | 17,0 | 19,8 | 25,0 | 37° | 27,0 | 31,9 | 21,2 | 36,4 | 24,0 | 45,0 |
| 005 | 17 | M25 X 1 | 12,8 | ± 0,025 | 16,6 | 16,3 | 19,1 | 29,0 | 37° | 30,0 | 35,0 | 22,8 | 37,8 | 28,0 | 55,0 |
| 006 | 17 | M25 X 1 | 23,5 | ± 0,025 | 27,3 | 26,9 | 29,8 | 29,0 | 37° | 30,0 | 37,7 | 22,8 | 37,8 | 28,0 | 55,0 |
| 007 | 19 | M28 X 1 | 18,0 | ± 0,025 | 21,8 | 21,6 | 24,3 | 32,0 | 40° | 34,0 | 37,4 | 24,0 | 39,2 | 32,0 | 65,0 |
| 008 | 21 | M31 X 1 | 19,0 | ± 0,025 | 22,8 | 22,6 | 25,3 | 36,0 | 40° | 37,0 | 40,6 | 25,6 | 40,9 | 36,0 | 75,0 |
| 009 | 23 | M34 X 1 | 23,0 | ± 0,025 | 26,8 | 26,4 | 29,3 | 39,0 | 40° | 41,0 | 43,8 | 27,1 | 42,5 | 40,0 | 85,0 |
| 010 | 25 | M37 X 1 | 26,5 | ± 0,025 | 32,3 | 32,0 | 34,8 | 43,0 | 40° | 44,0 | 46,3 | 28,4 | 43,8 | 44,0 | 95,0 |

TABLE 2

| CODE | FINISH |
|---|---|
| C | ELECTROLESS NICKEL |
| B | CADMIUM OLIVE DRAB OVER ELECTROLESS NICKEL |
| ZB | ZINC COBALT OLIVE DRAB OVER ELECTROLESS NICKEL |
| ZN | ZINC NICKEL BLACK PASSIVATE OVER ELECTROLESS NICKEL |

LIST NOT EXHAUSTIVE. SEE PLATING TABLE FOR OTHER OPTIONS

**For tooling and assembly instructions see www.polamco.com**

Backshell supplied without Band (see page 349)
Sealing and strain relief achieved with Heat Shrink Boot (see page 354)
Adhesive if required for assembly (see page 352)
Screenbraid for EMC/RFI screening (see page 350)

DRAWING NOT TO SCALE, DIMENSIONS IN MM

SEE PAGES 18-26 FOR COMPLETE LIST OF AVAILABLE MATERIALS, FINISHES AND CONNECTOR INTERFACES
(DIMENSIONS, FORM AND O RING SUBJECT TO CHANGE DEPENDING ON BACKSHELL MATERIAL AND CONNECTOR INTERFACE)

THIS DRAWING IS THE PROPERTY OF POLAMCO LTD AND MUST NOT BE USED FOR COMMERCIAL PURPOSES WITHOUT WRITTEN CONSENT OF THE COMPANY

# PVG1Z - VG Conduit Adaptor Insert

## Interface H - MIL-DTL-38999 SERIES III & IV

## VG APPROVED

Polamco

**Interconnect Solutions Worldwide**

BAND TERMINATION

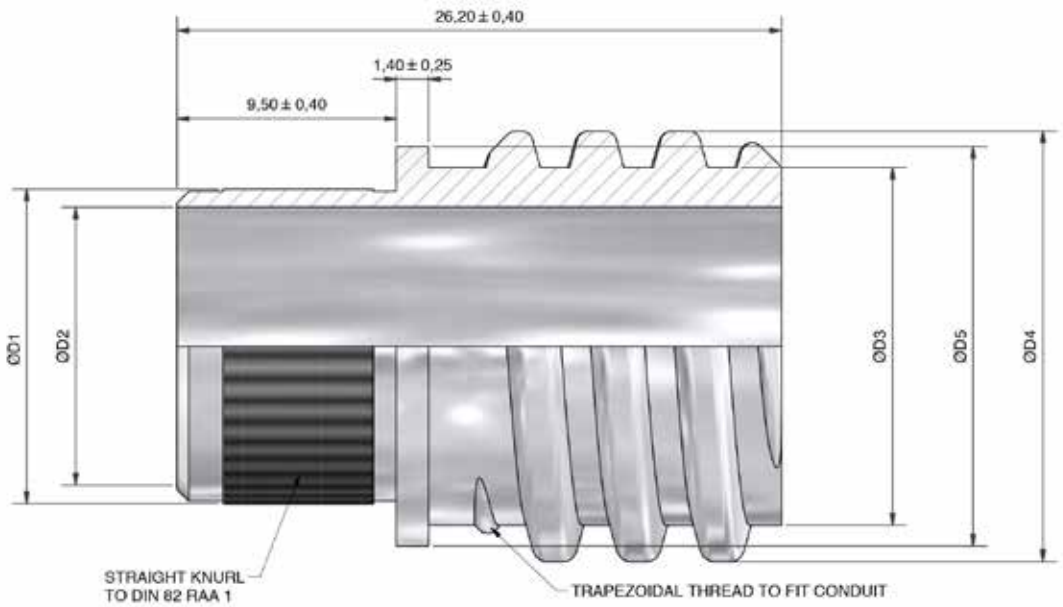


A-A

### VG PART NUMBERING

VG95319-1011Z001

VG SERIES
DASH NUMBER

MATERIAL AND FINISH:
STAINLESS STEEL - PASSIVATED

### POLAMCO PART NUMBERING

PVG1Z-001-4-J

POLAMCO SERIES
DASH NUMBER (TABLE 1)
MATERIAL
STAINLESS STEEL
FINISH
PASSIVATE

OPTIONS OUTSIDE THOSE POSSIBLE WITH VG PART NUMBER ARE AVAILABLE BUT WILL NOT BE VG APPROVED PARTS.
FOR FULL LIST OF MATERIAL AND PLATING OPTIONS PLEASE VISIT OUR WEBSITE

| DASH NO. | SHELL SIZE | ØD1 +0,05/-0 | ØD2 ±0,05 | ØD3 ±0,1 | ØD4 ±0,1 | ØD5 +0/-0,5 | CONDUIT INNER DIAMETER NOM. | MASS (g) MAX |
|---|---|---|---|---|---|---|---|---|
| 001 | 9 | 9,12 | 8,76 | 7,9 | 10,57 | 12,8 | 7,8 | 15 |
| 002 | 11 | 12,62 | 9,83 | 10,9 | 13,67 | 16,3 | 10,9 | 15 |
| 003 | 13 | 12,12 | 9,83 | 10,9 | 13,67 | 15,8 | 10,9 | 15 |
| 004 | 15 | 13,61 | 12,04 | 15,5 | 18,64 | 17,3 | 15,5 | 15 |
| 005 | 17 | 12,90 | 11,38 | 12,5 | 15,57 | 16,6 | 12,4 | 30 |
| 006 | 17 | 23,62 | 20,83 | 21,8 | 26,01 | 27,3 | 21,8 | 30 |
| 007 | 19 | 18,14 | 14,43 | 15,5 | 18,64 | 21,8 | 15,5 | 30 |
| 008 | 21 | 19,13 | 17,53 | 18,5 | 22,48 | 22,8 | 18,5 | 30 |
| 009 | 23 | 23,14 | 20,83 | 21,8 | 26,01 | 26,8 | 21,8 | 40 |
| 010 | 25 | 28,63 | 27,05 | 28,2 | 33,63 | 32,3 | 28,0 | 40 |

**For tooling and assembly instructions see www.polamco.com**

Backshell supplied without Band (see page 349)
Sealing and strain relief achieved with Heat Shrink Boot (see page 354)
Adhesive if required for assembly (see page 352)
Screenbraid for EMC/RFI screening (see page 350)

DRAWING NOT TO SCALE, DIMENSIONS IN MM

SEE PAGES 18-26 FOR COMPLETE LIST OF AVAILABLE MATERIALS, FINISHES AND CONNECTOR INTERFACES
(DIMENSIONS, FORM AND O RING SUBJECT TO CHANGE DEPENDING ON BACKSHELL MATERIAL AND CONNECTOR INTERFACE)



THIS DRAWING IS THE PROPERTY OF POLAMCO LTD AND MUST NOT BE USED FOR COMMERCIAL PURPOSES WITHOUT WRITTEN CONSENT OF THE COMPANY

# PVG1DH1 - Band Termination
# Low Profile / Step-Up Entry

## Interface H - MIL-DTL-38999 SERIES III & IV

## VG APPROVED

Polamco

**Interconnect Solutions Worldwide**



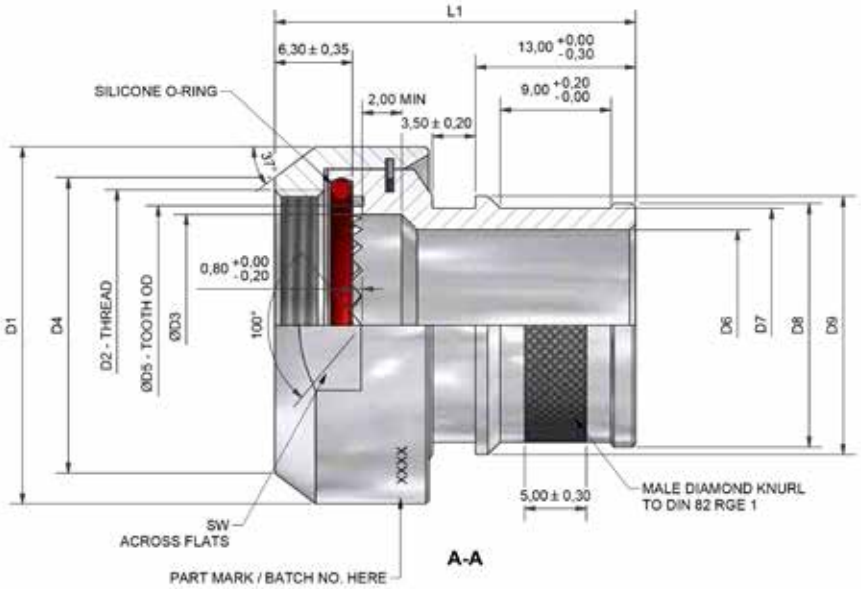


### VG PART NUMBERING

VG95319-1011D001A

- VG SERIES
- DASH NUMBER
- MATERIAL AND FINISH OPTION
  - A = ALUMINIUM ALLOY - OLIVE DRAB OVER ELECTROLESS NICKEL
  - I = ALUMINIUM BRONZE - SHOT BLAST
  - S = STAINLESS STEEL - PASSIVATED

### POLAMCO PART NUMBERING

PVG1DH1-001-1-B

- POLAMCO SERIES
- INTERFACE (MIL-DTL-38999 SERIES III AND IV)
- ANGLE (1 = STRAIGHT)
- DASH NUMBER
- MATERIAL
- FINISH

ANY OPTIONS OUTSIDE THOSE POSSIBLE WITH VG PART NUMBER ARE AVAILABLE BUT WILL NOT BE VG APPROVED PARTS. FOR FULL LIST OF MATERIAL AND PLATING OPTIONS PLEASE VISIT OUR WEBSITE

| DASH NO. | SHELL SIZE | D1 | D2 | D3 | D4 | D5 | D6 | D7 | D8 | D9 | L1 |
|---|---|---|---|---|---|---|---|---|---|---|---|
| | | ±0,2 | | +0,2/-0 | +0,2/-0,1 | +0,2/-0 | +0,5/-0 | ±0,1 | +0/-0,15 | ±0,1 | MAX |
| 001 | 09 | 19 | M12 X 1 | 8,5 | 14,25 | 10,8 | 19,0 | 22,5 | 23,3 | 24,5 | 32,0 |
| 002 | 11 | 22 | M15 X 1 | 12,0 | 17,00 | 13,8 | 9,5 | 13,0 | 13,8 | 15,0 | 30,0 |
| 003 | 11 | 22 | M15 X 1 | 12,0 | 17,00 | 13,8 | 22,0 | 24,8 | 25,6 | 28,3 | 32,0 |
| 004 | 13 | 25 | M18 X 1 | 13,8 | 20,00 | 16,8 | 25,0 | 28,5 | 29,3 | 32,0 | 32,0 |
| 005 | 15 | 29 | M22 X 1 | 18,0 | 24,00 | 20,8 | 15,5 | 19,0 | 19,8 | 21,0 | 30,0 |
| 006 | 15 | 29 | M22 X 1 | 18,0 | 24,00 | 20,8 | 17,5 | 21,0 | 21,8 | 23,0 | 30,0 |
| 007 | 17 | 32 | M25 X 1 | 21,1 | 27,00 | 23,8 | 28,5 | 32,0 | 32,8 | 35,5 | 32,0 |
| 008 | 19 | 36 | M28 X 1 | 24,1 | 30,00 | 26,8 | 22,0 | 24,8 | 25,6 | 28,3 | 31,0 |
| 009 | 21 | 39 | M31 X 1 | 27,1 | 33,00 | 29,8 | 25,0 | 28,5 | 29,3 | 32,0 | 34,0 |
| 010 | 23 | 43 | M34 X 1 | 30,1 | 36,00 | 32,8 | 12,7 | 16,5 | 17,0 | 18,2 | 34,0 |
| 011 | 25 | 46 | M37 X 1 | 33,3 | 39,00 | 35,8 | 17,5 | 21,0 | 21,8 | 23,0 | 34,0 |

| DASH NO. | SHELL SIZE | α | SW | NO. OF TEETH | MASS (g) |
|---|---|---|---|---|---|
| | | ±1° | +0/-0,2 | | MAX |
| 001 | 09 | 35° | 17 | 12 | 20 |
| 002 | 11 | 37° | 20 | 16 | 12 |
| 003 | 11 | 37° | 20 | 16 | 25 |
| 004 | 13 | 37° | 23 | 20 | 30 |
| 005 | 15 | 37° | 27 | 24 | 30 |
| 006 | 15 | 37° | 27 | 24 | 30 |
| 007 | 17 | 37° | 30 | 28 | 35 |
| 008 | 19 | 40° | 34 | 32 | 35 |
| 009 | 21 | 40° | 37 | 36 | 40 |
| 010 | 23 | 40° | 41 | 40 | 40 |
| 011 | 25 | 40° | 44 | 44 | 40 |

**For tooling and assembly instructions see www.polamco.com**

Backshell supplied without Band (see page 349)
Sealing and strain relief achieved with Heat Shrink Boot (see page 354)
Adhesive if required for assembly (see page 352)
Screenbraid for EMC/RFI screening (see page 350)

DRAWING NOT TO SCALE, DIMENSIONS IN MM

SEE PAGES 18-26 FOR COMPLETE LIST OF AVAILABLE MATERIALS, FINISHES AND CONNECTOR INTERFACES
(DIMENSIONS, FORM AND O RING SUBJECT TO CHANGE DEPENDING ON BACKSHELL MATERIAL AND CONNECTOR INTERFACE)

THIS DRAWING IS THE PROPERTY OF POLAMCO LTD AND MUST NOT BE USED FOR COMMERCIAL PURPOSES WITHOUT WRITTEN CONSENT OF THE COMPANY

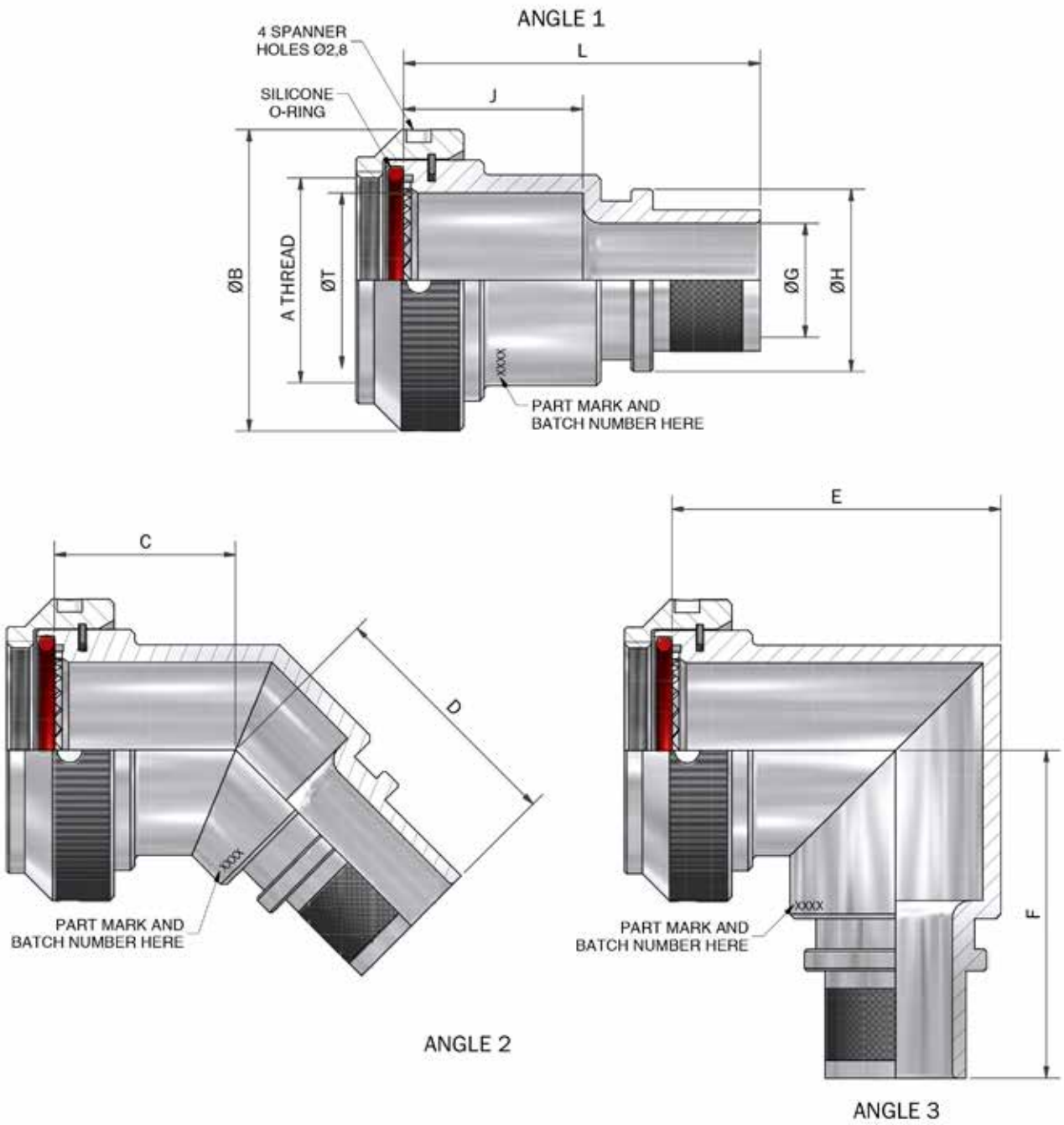


DRAWING NOT TO SCALE, DIMENSIONS IN MM

SEE PAGES 18-26 FOR COMPLETE LIST OF AVAILABLE MATERIALS, FINISHES AND CONNECTOR INTERFACES
(DIMENSIONS, FORM AND O RING SUBJECT TO CHANGE DEPENDING ON BACKSHELL MATERIAL AND CONNECTOR INTERFACE)




THIS DRAWING IS THE PROPERTY OF POLAMCO LTD AND MUST NOT BE USED FOR COMMERCIAL PURPOSES WITHOUT WRITTEN CONSENT OF THE COMPANY

# APF - Band Termination

## Interface F - MIL-DTL-38999 SERIES I & II

Polamco

**Interconnect Solutions Worldwide**

BAND TERMINATION

TABLE 1

| DASH NO. | SHELL SIZE SERIES I | SHELL SIZE SERIES II | A THREAD | ØB MAX | C ±0,5 | D MAX | E MAX | F MAX | T ±0,2 | | J=10 | J=15 | J=20 | J=25 | J=30 | J=35 | J=40 | J=45 | J=50 |
|---|---|---|---|---|---|---|---|---|---|---|---|---|---|---|---|---|---|---|---|
| 08 | 09 | 08 | 7/16-28 UNEF | 21,1 | 16,4 | 24,7 | 27,7 | 30,4 | 6,8 | L= | 29,4 | 34,4 | 39,4 | 44,4 | 49,4 | 54,4 | 59,4 | 64,4 | 69,4 |
| 10 | 11 | 10 | 9/16-24 UNEF | 24,3 | 17,2 | 25,9 | 31,2 | 32,2 | 10,3 | L= | 30,3 | 35,3 | 40,3 | 45,3 | 50,3 | 55,3 | 60,3 | 65,3 | 70,3 |
| 12 | 13 | 12 | 11/16-24 UNEF | 27,3 | 17,6 | 26,3 | 34,2 | 33,7 | 13,6 | L= | 31,1 | 36,1 | 41,1 | 46,1 | 51,1 | 56,1 | 61,1 | 66,1 | 71,1 |
| 14 | 15 | 14 | 13/16-20 UNEF | 30,6 | 18,5 | 27,2 | 37,2 | 35,2 | 16,3 | L= | 32,0 | 37,0 | 42,0 | 47,0 | 52,0 | 57,0 | 62,0 | 67,0 | 72,0 |
| 16 | 17 | 16 | 15/16-20 UNEF | 33,6 | 19,2 | 28,0 | 40,7 | 36,9 | 19,5 | L= | 33,0 | 38,0 | 43,0 | 48,0 | 53,0 | 58,0 | 63,0 | 68,0 | 73,0 |
| 18 | 19 | 18 | 1 1/16-18 UNEF | 36,9 | 19,6 | 28,3 | 44,7 | 38,5 | 21,9 | L= | 33,8 | 38,8 | 43,8 | 48,8 | 53,8 | 58,8 | 63,8 | 68,8 | 73,8 |
| 20 | 21 | 20 | 1 3/16-18 UNEF | 40,1 | 20,4 | 29,1 | 47,2 | 40,1 | 25,2 | L= | 34,7 | 39,7 | 44,7 | 49,7 | 54,7 | 59,7 | 64,7 | 69,7 | 74,7 |
| 22 | 23 | 22 | 1 5/16-18 UNEF | 43,3 | 20,8 | 29,5 | 50,2 | 41,6 | 28,3 | L= | 35,7 | 40,7 | 45,7 | 50,7 | 55,7 | 60,7 | 65,7 | 70,7 | 75,7 |
| 24 | 25 | 24 | 1 7/16-18 UNEF | 46,5 | 21,7 | 30,4 | 53,2 | 43,1 | 31,5 | L= | 36,7 | 41,7 | 46,7 | 51,7 | 56,7 | 61,7 | 66,7 | 71,7 | 76,7 |

TABLE 2

| ENTRY SIZE | ØG | ØH MAX |
|---|---|---|
| 06 | 4,8 | 12,4 |
| 08 | 6,4 | 14,0 |
| 10 | 7,9 | 15,5 |
| 12 | 9,5 | 17,1 |
| 14 | 11,1 | 18,7 |
| 16 | 12,7 | 20,3 |
| 20 | 15,9 | 23,5 |
| 24 | 19,0 | 26,7 |
| 28 | 22,2 | 29,8 |
| 32 | 25,4 | 33,0 |
| 36 | 28,6 | 36,2 |
| 40 | 31,8 | 39,4 |

TABLE 3

| CODE | MATERIAL / PLATING |
|---|---|
| 1-C | ALUMINIUM / ELECTROLESS NICKEL |
| 1-B | ALUMINIUM / CADMIUM OLIVE DRAB OVER ELECTROLESS NICKEL |
| 1-ZB | ALUMINIUM / ZINC COBALT OLIVE DRAB OVER ELECTROLESS NICKEL |
| 1-ZN | ALUMINIUM / ZINC NICKEL BLACK PASSIVATE OVER ELECTROLESS NICKEL |
| 4-J | STAINLESS STEEL / PASSIVATE |
| 2-Z | NICKEL ALUMINIUM BRONZE / SHOT BLAST |

LIST NOT EXHAUSTIVE, SEE MATERIAL AND PLATING TABLE FOR FULL LIST

APF1-16-16-25-1-C

- SERIES
- CONNECTOR INTERFACE
- ANGLE
- DASH NO. (TABLE 1)
- ENTRY SIZE (TABLE 2)
- CHAMBER LENGTH J (TABLE 1)
- MATERIAL (TABLE 3)
- FINISH (TABLE 3)

**For tooling and assembly instructions see www.polamco.com**

Backshell supplied without Band (see page 349)
Sealing and strain relief achieved with Heat Shrink Boot (see page 354)
Adhesive if required for assembly (see page 352)
Screenbraid for EMC/RFI screening (see page 350)

DRAWING NOT TO SCALE, DIMENSIONS IN MM

SEE PAGES 18-26 FOR COMPLETE LIST OF AVAILABLE MATERIALS, FINISHES AND CONNECTOR INTERFACES
(DIMENSIONS, FORM AND O RING SUBJECT TO CHANGE DEPENDING ON BACKSHELL MATERIAL AND CONNECTOR INTERFACE)

THIS DRAWING IS THE PROPERTY OF POLAMCO LTD AND MUST NOT BE USED FOR COMMERCIAL PURPOSES WITHOUT WRITTEN CONSENT OF THE COMPANY

# APH - Band Termination

## Interface H - MIL-DTL-38999 SERIES III & IV

Polamco

**Interconnect Solutions Worldwide**

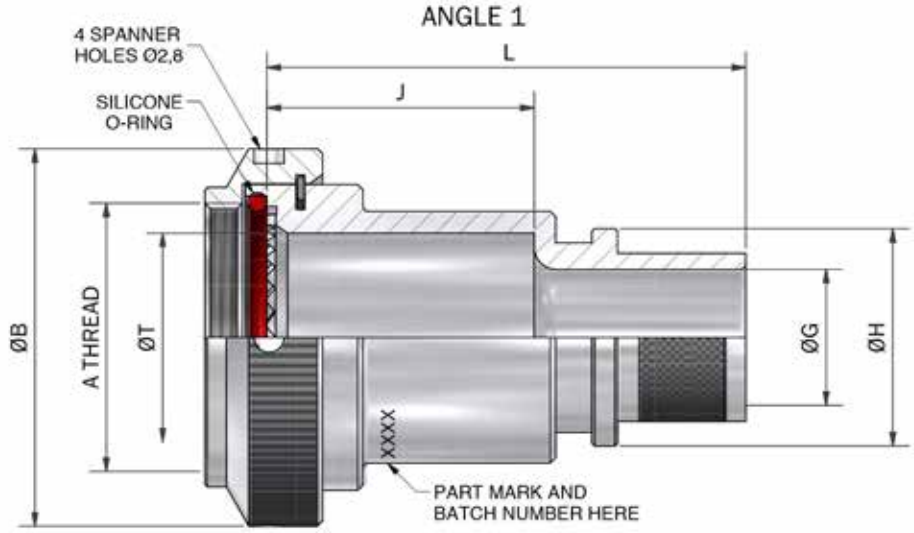


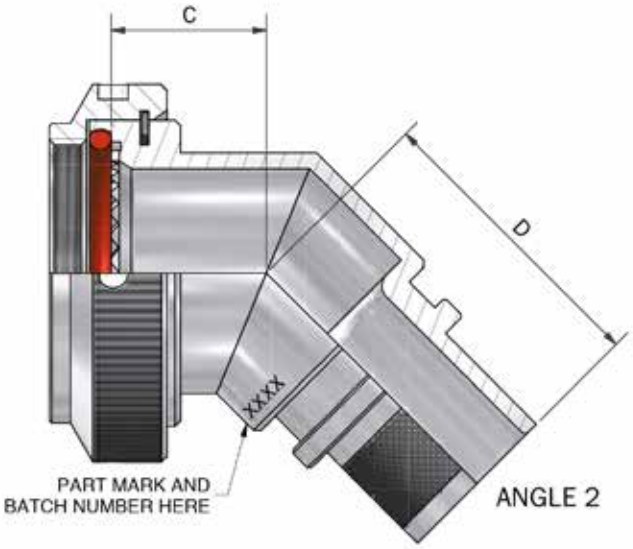


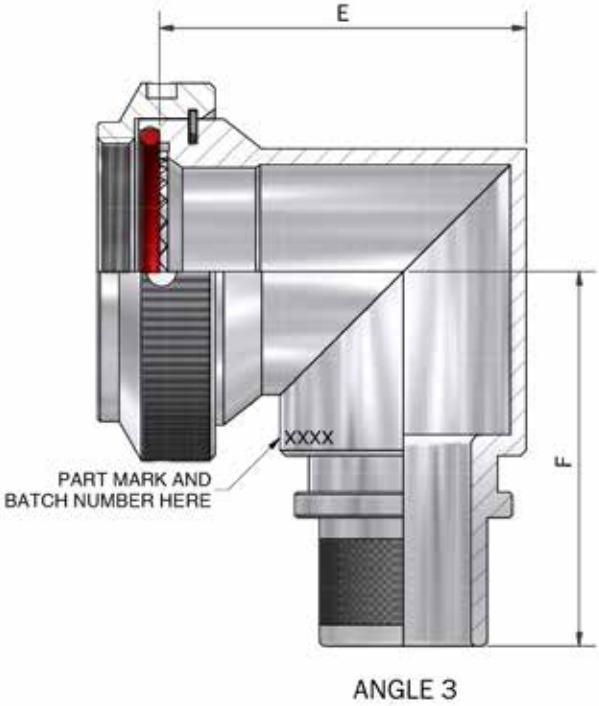


DRAWING NOT TO SCALE, DIMENSIONS IN MM

SEE PAGES 18-26 FOR COMPLETE LIST OF AVAILABLE MATERIALS, FINISHES AND CONNECTOR INTERFACES
(DIMENSIONS, FORM AND O RING SUBJECT TO CHANGE DEPENDING ON BACKSHELL MATERIAL AND CONNECTOR INTERFACE)



THIS DRAWING IS THE PROPERTY OF POLAMCO LTD AND MUST NOT BE USED FOR COMMERCIAL PURPOSES WITHOUT WRITTEN CONSENT OF THE COMPANY

# APH - Band Termination

## Interface H - MIL-DTL-38999 SERIES III & IV

Polamco

**Interconnect Solutions Worldwide**



TABLE 1

| SHELL SIZE | A THREAD | ØB MAX | C MAX | D MAX | E MAX | F MAX | T ±0,2 | | J=10 | J=15 | J=20 | J=25 | J=30 | J=35 | J=40 | J=45 | J=50 |
|---|---|---|---|---|---|---|---|---|---|---|---|---|---|---|---|---|---|
| 09 | M12 x 1.0 | 20,8 | 13,1 | 24,7 | 27,7 | 30,4 | 6,8 | L= | 29,4 | 34,4 | 39,4 | 44,4 | 49,4 | 54,4 | 59,4 | 64,4 | 69,4 |
| 11 | M15 x 1.0 | 23,8 | 13,9 | 25,9 | 31,2 | 32,2 | 10,3 | L= | 30,3 | 35,3 | 40,3 | 45,3 | 50,3 | 55,3 | 60,3 | 65,3 | 70,3 |
| 13 | M18 x 1.0 | 27,3 | 14,5 | 26,3 | 34,2 | 33,7 | 13,6 | L= | 31,1 | 36,1 | 41,1 | 46,1 | 51,1 | 56,1 | 61,1 | 66,1 | 71,1 |
| 15 | M22 x 1.0 | 31,8 | 15,5 | 27,2 | 37,2 | 35,2 | 16,3 | L= | 32,0 | 37,0 | 42,0 | 47,0 | 52,0 | 57,0 | 62,0 | 67,0 | 72,0 |
| 17 | M25 x 1.0 | 35,3 | 16,1 | 28,0 | 40,7 | 36,9 | 19,5 | L= | 33,0 | 38,0 | 43,0 | 48,0 | 53,0 | 58,0 | 63,0 | 68,0 | 73,0 |
| 19 | M28 x 1.0 | 38,3 | 16,8 | 28,3 | 44,7 | 38,5 | 21,9 | L= | 33,8 | 38,8 | 43,8 | 48,8 | 53,8 | 58,8 | 63,8 | 68,8 | 73,8 |
| 21 | M31 x 1.0 | 39,8 | 17,1 | 29,1 | 47,2 | 40,1 | 25,2 | L= | 34,7 | 39,7 | 44,7 | 49,7 | 54,7 | 59,7 | 64,7 | 69,7 | 74,7 |
| 23 | M34 x 1.0 | 42,8 | 17,7 | 29,5 | 50,2 | 41,6 | 28,3 | L= | 35,7 | 40,7 | 45,7 | 50,7 | 55,7 | 60,7 | 65,7 | 70,7 | 75,7 |
| 25 | M37 x 1.0 | 46,3 | 18,4 | 30,4 | 53,2 | 43,1 | 31,5 | L= | 36,7 | 41,7 | 46,7 | 51,7 | 56,7 | 61,7 | 66,7 | 71,7 | 76,7 |

TABLE 2

| ENTRY SIZE | ØG | ØH MAX |
|---|---|---|
| 06 | 4,8 | 12,4 |
| 08 | 6,4 | 14,0 |
| 10 | 7,9 | 15,5 |
| 12 | 9,5 | 17,1 |
| 14 | 11,1 | 18,7 |
| 16 | 12,7 | 20,3 |
| 20 | 15,9 | 23,5 |
| 24 | 19,0 | 26,7 |
| 28 | 22,2 | 29,8 |
| 32 | 25,4 | 33,0 |
| 36 | 28,6 | 36,2 |
| 40 | 31,8 | 39,4 |

TABLE 3

| CODE | MATERIAL / PLATING |
|---|---|
| 1-C | ALUMINIUM / ELECTROLESS NICKEL |
| 1-B | ALUMINIUM / CADMIUM OLIVE DRAB OVER ELECTROLESS NICKEL |
| 1-ZB | ALUMINIUM / ZINC COBALT OLIVE DRAB OVER ELECTROLESS NICKEL |
| 1-ZN | ALUMINIUM / ZINC NICKEL BLACK PASSIVATE OVER ELECTROLESS NICKEL |
| 4-J | STAINLESS STEEL / PASSIVATE |
| 2-Z | NICKEL ALUMINIUM BRONZE / SHOT BLAST |

LIST NOT EXHAUSTIVE, SEE MATERIAL AND PLATING TABLE FOR FULL LIST

APH1-17-16-25-1-C

- SERIES
- CONNECTOR INTERFACE
- ANGLE
- SHELL SIZE (TABLE 1)
- ENTRY SIZE (TABLE 2)
- CHAMBER LENGTH J (TABLE 1)
- MATERIAL (TABLE 3)
- FINISH (TABLE 3)

**For tooling and assembly instructions see www.polamco.com**

Backshell supplied without Band (see page 349)
Sealing and strain relief achieved with Heat Shrink Boot (see page 354)
Adhesive if required for assembly (see page 352)
Screenbraid for EMC/RFI screening (see page 350)

DRAWING NOT TO SCALE, DIMENSIONS IN MM

SEE PAGES 18-26 FOR COMPLETE LIST OF AVAILABLE MATERIALS, FINISHES AND CONNECTOR INTERFACES
(DIMENSIONS, FORM AND O RING SUBJECT TO CHANGE DEPENDING ON BACKSHELL MATERIAL AND CONNECTOR INTERFACE)

THIS DRAWING IS THE PROPERTY OF POLAMCO LTD AND MUST NOT BE USED FOR COMMERCIAL PURPOSES WITHOUT WRITTEN CONSENT OF THE COMPANY

# DS - Internal & External Band Termination

## Interface F - MIL-DTL-38999 SERIES I

Polamco

**Interconnect Solutions Worldwide**

ANGLE 1

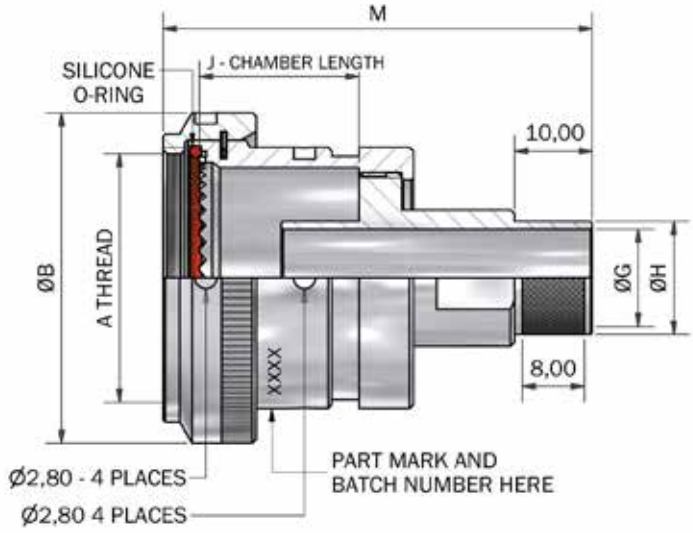


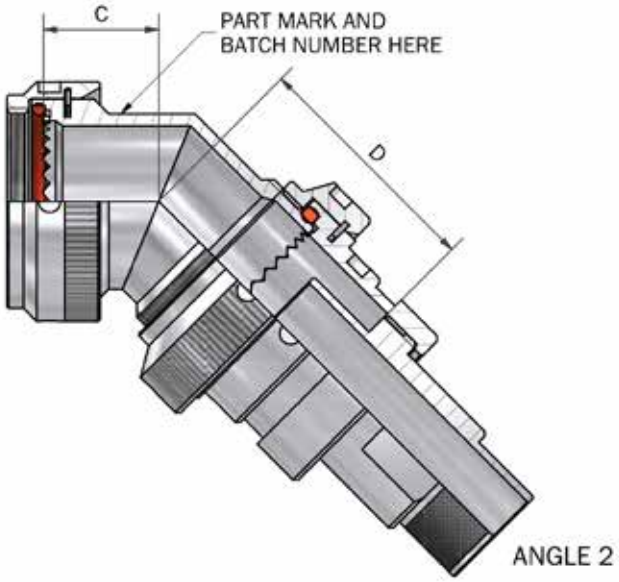


ANGLE 2

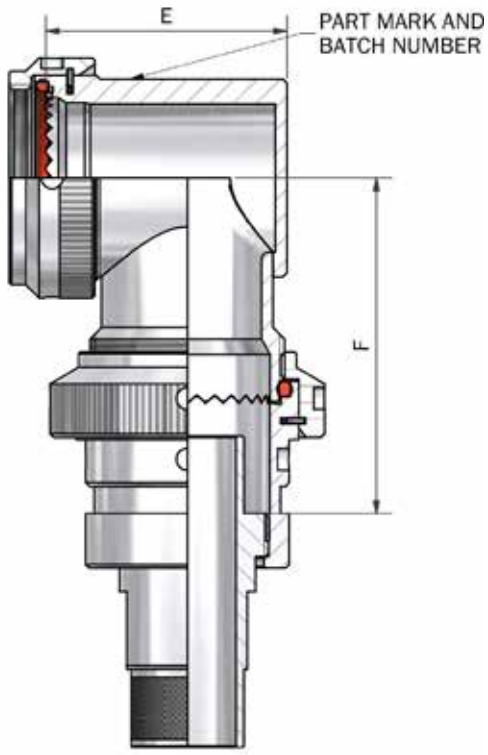


ANGLE 3

DRAWING NOT TO SCALE, DIMENSIONS IN MM

SEE PAGES 18-26 FOR COMPLETE LIST OF AVAILABLE MATERIALS, FINISHES AND CONNECTOR INTERFACES
(DIMENSIONS, FORM AND O RING SUBJECT TO CHANGE DEPENDING ON BACKSHELL MATERIAL AND CONNECTOR INTERFACE)



THIS DRAWING IS THE PROPERTY OF POLAMCO LTD AND MUST NOT BE USED FOR COMMERCIAL PURPOSES WITHOUT WRITTEN CONSENT OF THE COMPANY

# DS - Internal & External Band Termination

## Interface F - MIL-DTL-38999 SERIES I

Polamco

**Interconnect Solutions Worldwide**

TABLE 1

| SHELL SIZE | A THREAD | ØB MAX | C MAX | D ±0,5 | E MAX | F ±0,5 | MAX ENTRY |
|---|---|---|---|---|---|---|---|
| 13 | 11/16 -24UNEF | 27,3 | 13,6 | 30,5 | 27,0 | 37,6 | 05 |
| 15 | 13/16 -20UNEF | 30,6 | 14,0 | 31,0 | 28,0 | 41,6 | 07 |
| 17 | 15/16 -20UNEF | 35,3 | 15,0 | 32,0 | 31,0 | 43,1 | 10 |
| 19 | 1 1/16 -18UNEF | 38,3 | 16,0 | 33,0 | 36,0 | 44,6 | 12 |
| 21 | 1 3/16 -18UNEF | 40,1 | 16,6 | 33,5 | 39,0 | 46,1 | 13 |
| 23 | 1 5/16 -18UNEF | 46,5 | 17,0 | 34,0 | 41,0 | 47,6 | 15 |
| 25 | 1 7/16 -18UNEF | 47,2 | 17,4 | 34,5 | 47,0 | 49,1 | 16 |

TABLE 2

| ENTRY SIZE | ØG MIN | ØH MIN |
|---|---|---|
| 03 | 4,0 | 6,0 |
| 04 | 5,5 | 7,5 |
| 05 | 7,5 | 9,5 |
| 06 | 9,5 | 11,5 |
| 07 | 10,5 | 12,5 |
| 08 | 12,5 | 14,5 |
| 09 | 14,0 | 16,0 |
| 10 | 15,5 | 17,5 |
| 11 | 17,0 | 19,0 |
| 12 | 18,5 | 20,5 |
| 13 | 20,0 | 22,0 |
| 14 | 21,5 | 23,5 |
| 15 | 23,0 | 25,0 |
| 16 | 25,0 | 27,0 |

TABLE 3

| J | M MAX |
|---|---|
| 20 | 60,0 |
| 25 | 65,0 |
| 30 | 70,0 |
| 35 | 75,0 |
| 40 | 80,0 |
| 45 | 85,0 |
| 50 | 90,0 |

TABLE 4

| CODE | FINISH |
|---|---|
| C | ELECTROLESS NICKEL |
| B | CADMIUM OLIVE DRAB OVER ELECTROLESS NICKEL |
| ZB | ZINC COBALT OLIVE DRAB OVER ELECTROLESS NICKEL |
| ZN | ZINC NICKEL BLACK PASSIVATE OVER ELECTROLESS NICKEL |

LIST NOT EXHAUSTIVE, SEE PLATING TABLE FOR OTHER OPTIONS

DSF1-21-08-20-1-C

- SERIES
- CONNECTOR INTERFACE
- ANGLE
- SHELL SIZE (TABLE 1)
- ENTRY SIZE (TABLE 2)
- CHAMBER LENGTH - (TABLE 3) - STRAIGHT ONLY
  OMIT FOR ANGLE 2 & 3
- MATERIAL
  ALUMINIUM ALLOY
- FINISH (TABLE 4)

**For tooling and assembly instructions see www.polamco.com**

Backshell supplied without Band (see page 349)
Sealing and strain relief achieved with Heat Shrink Boot (see page 354)
Adhesive if required for assembly (see page 352)
Screenbraid for EMC/RFI screening (see page 350)

DRAWING NOT TO SCALE, DIMENSIONS IN MM

SEE PAGES 18-26 FOR COMPLETE LIST OF AVAILABLE MATERIALS, FINISHES AND CONNECTOR INTERFACES
(DIMENSIONS, FORM AND O RING SUBJECT TO CHANGE DEPENDING ON BACKSHELL MATERIAL AND CONNECTOR INTERFACE)

THIS DRAWING IS THE PROPERTY OF POLAMCO LTD AND MUST NOT BE USED FOR
COMMERCIAL PURPOSES WITHOUT WRITTEN CONSENT OF THE COMPANY

# DS - Internal & External Band Termination

## Interface F - MIL-DTL-38999 SERIES II

Polamco

**Interconnect Solutions Worldwide**

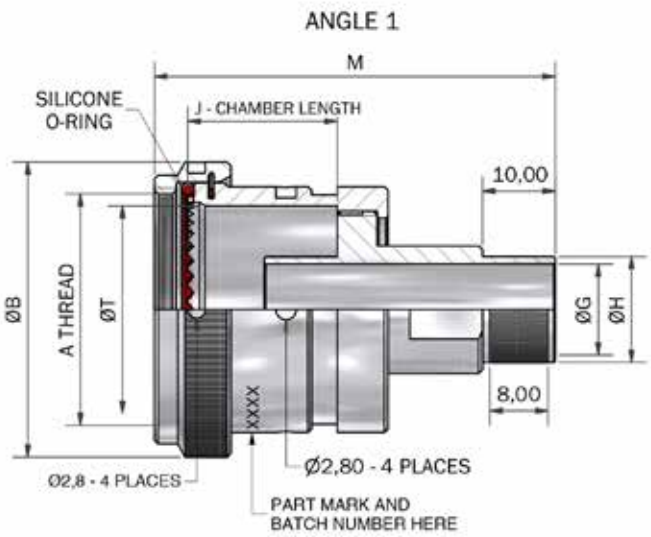


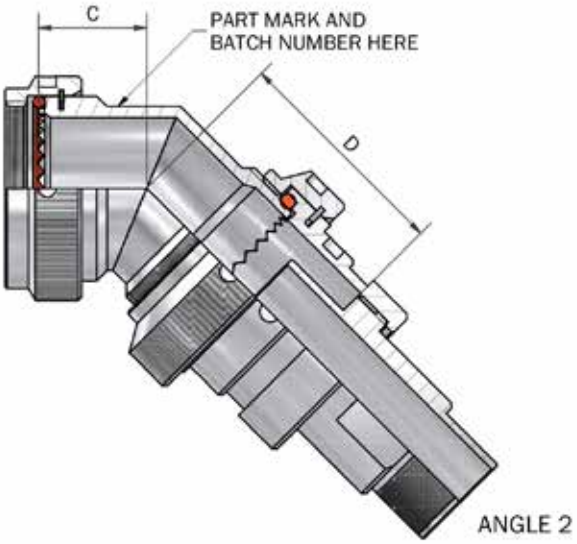


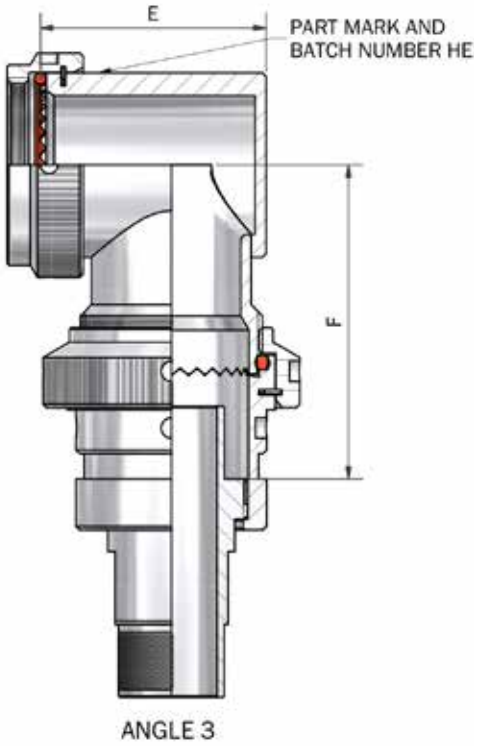


DRAWING NOT TO SCALE, DIMENSIONS IN MM

SEE PAGES 18-26 FOR COMPLETE LIST OF AVAILABLE MATERIALS, FINISHES AND CONNECTOR INTERFACES
(DIMENSIONS, FORM AND O RING SUBJECT TO CHANGE DEPENDING ON BACKSHELL MATERIAL AND CONNECTOR INTERFACE)



THIS DRAWING IS THE PROPERTY OF POLAMCO LTD AND MUST NOT BE USED FOR COMMERCIAL PURPOSES WITHOUT WRITTEN CONSENT OF THE COMPANY

TABLE 1

| SHELL SIZE | A THREAD | ØB MAX | ØT MIN | C MAX | D ±0,5 | E MAX | F ±0,5 | MAX ENTRY |
|---|---|---|---|---|---|---|---|---|
| 12 | 11/16 -24UNEF | 24,5 | 12,9 | 13,6 | 30,5 | 27,0 | 37,6 | 05 |
| 14 | 13/16 -20UNEF | 27,8 | 16,1 | 14,0 | 31,0 | 28,0 | 41,6 | 07 |
| 16 | 15/16 -20UNEF | 30,8 | 19,3 | 15,0 | 32,0 | 31,0 | 43,1 | 10 |
| 18 | 1 1/16 -18UNEF | 34,1 | 21,7 | 16,0 | 33,0 | 36,0 | 44,6 | 12 |
| 20 | 1 3/16 -18UNEF | 37,3 | 24,9 | 16,6 | 33,5 | 39,0 | 46,1 | 13 |
| 22 | 1 5/16 -18UNEF | 40,5 | 28,1 | 17,0 | 34,0 | 41,0 | 47,6 | 15 |
| 24 | 1 7/16 -18UNEF | 43,7 | 31,3 | 17,4 | 34,5 | 47,0 | 49,1 | 16 |

TABLE 2

| ENTRY SIZE | ØG MIN | ØH MIN |
|---|---|---|
| 03 | 4,0 | 6,0 |
| 04 | 5,5 | 7,5 |
| 05 | 7,5 | 9,5 |
| 06 | 9,5 | 11,5 |
| 07 | 10,5 | 12,5 |
| 08 | 12,5 | 14,5 |
| 09 | 14,0 | 16,0 |
| 10 | 15,5 | 17,5 |
| 11 | 17,0 | 19,0 |
| 12 | 18,5 | 20,5 |
| 13 | 20,0 | 22,0 |
| 14 | 21,5 | 23,5 |
| 15 | 23,0 | 25,0 |
| 16 | 25,0 | 27,0 |

TABLE 3

| J | M MAX |
|---|---|
| 20 | 60,0 |
| 25 | 65,0 |
| 30 | 70,0 |
| 35 | 75,0 |
| 40 | 80,0 |
| 45 | 85,0 |
| 50 | 90,0 |

TABLE 4

| CODE | FINISH |
|---|---|
| C | ELECTROLESS NICKEL |
| B | CADMIUM OLIVE DRAB OVER ELECTROLESS NICKEL |
| ZB | ZINC COBALT OLIVE DRAB OVER ELECTROLESS NICKEL |
| ZN | ZINC NICKEL BLACK PASSIVATE OVER ELECTROLESS NICKEL |

LIST NOT EXHAUSTIVE, SEE PLATING TABLE FOR OTHER OPTIONS

DSF1-22-08-20-1-C

- SERIES
- CONNECTOR INTERFACE
- ANGLE
- SHELL SIZE (TABLE 1)
- ENTRY SIZE (TABLE 2)
- CHAMBER LENGTH - (TABLE 3) - STRAIGHT ONLY
  OMIT FOR ANGLE 2 & 3
- MATERIAL
  ALUMINIUM ALLOY
- FINISH (TABLE 4)

**For tooling and assembly instructions see www.polamco.com**

Backshell supplied without Band (see page 349)
Sealing and strain relief achieved with Heat Shrink Boot (see page 354)
Adhesive if required for assembly (see page 352)
Screenbraid for EMC/RFI screening (see page 350)

DRAWING NOT TO SCALE, DIMENSIONS IN MM

SEE PAGES 18-26 FOR COMPLETE LIST OF AVAILABLE MATERIALS, FINISHES AND CONNECTOR INTERFACES
(DIMENSIONS, FORM AND O RING SUBJECT TO CHANGE DEPENDING ON BACKSHELL MATERIAL AND CONNECTOR INTERFACE)


THIS DRAWING IS THE PROPERTY OF POLAMCO LTD AND MUST NOT BE USED FOR COMMERCIAL PURPOSES WITHOUT WRITTEN CONSENT OF THE COMPANY

# DS - Internal & External Band Termination

## Interface H - MIL-DTL-38999 SERIES III & IV

Polamco

**Interconnect Solutions Worldwide**

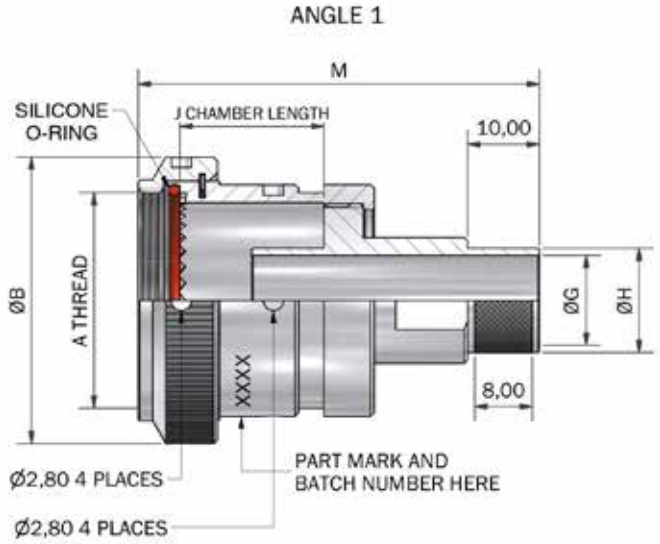


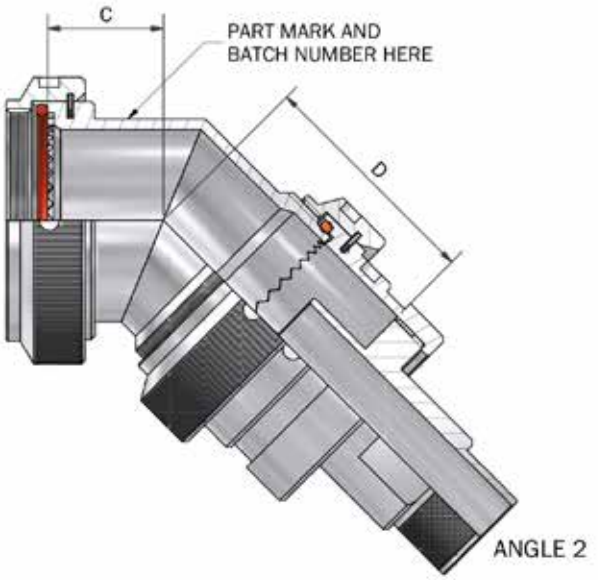


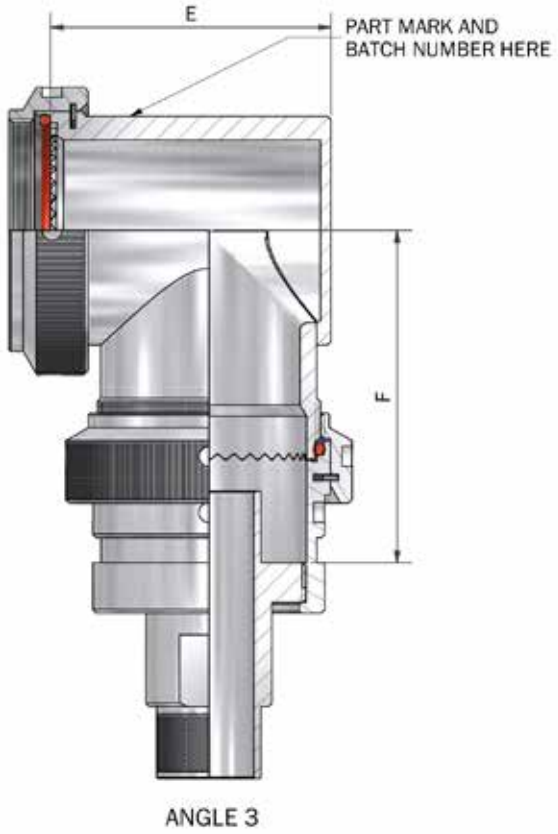


DRAWING NOT TO SCALE, DIMENSIONS IN MM

SEE PAGES 18-26 FOR COMPLETE LIST OF AVAILABLE MATERIALS, FINISHES AND CONNECTOR INTERFACES
(DIMENSIONS, FORM AND O RING SUBJECT TO CHANGE DEPENDING ON BACKSHELL MATERIAL AND CONNECTOR INTERFACE)



THIS DRAWING IS THE PROPERTY OF POLAMCO LTD AND MUST NOT BE USED FOR COMMERCIAL PURPOSES WITHOUT WRITTEN CONSENT OF THE COMPANY

TABLE 1

| SHELL SIZE | A THREAD | ØB MAX | C MAX | D ±0,5 | E MAX | F ±0,5 | MAX ENTRY |
|---|---|---|---|---|---|---|---|
| 13 | M18 x 1.0 | 27,4 | 13,6 | 30,5 | 27,0 | 37,6 | 05 |
| 15 | M22 x 1.0 | 31,8 | 14,0 | 31,0 | 28,0 | 41,6 | 07 |
| 17 | M25 x 1.0 | 35,0 | 15,0 | 32,0 | 31,0 | 43,1 | 10 |
| 19 | M28 x 1.0 | 38,1 | 16,0 | 33,0 | 36,0 | 44,6 | 12 |
| 21 | M31 x 1.0 | 41,2 | 16,6 | 33,5 | 39,0 | 46,1 | 13 |
| 23 | M34 x 1.0 | 44,3 | 17,0 | 34,0 | 41,0 | 47,6 | 15 |
| 25 | M37 x 1.0 | 47,2 | 17,5 | 34,5 | 47,0 | 49,1 | 16 |

TABLE 2

| ENTRY SIZE | ØG | H ±0,2 |
|---|---|---|
| 03 | 4,0 | 6,0 |
| 04 | 5,5 | 7,5 |
| 05 | 7,5 | 9,5 |
| 06 | 9,5 | 11,5 |
| 07 | 10,5 | 12,5 |
| 08 | 12,5 | 14,5 |
| 09 | 14,0 | 16,0 |
| 10 | 15,5 | 17,5 |
| 11 | 17,0 | 19,0 |
| 12 | 18,5 | 20,5 |
| 13 | 20,0 | 22,0 |
| 14 | 21,5 | 23,5 |
| 15 | 23,0 | 25,0 |
| 16 | 25,0 | 27,0 |

TABLE 3

| J CHAMBER | M MAX |
|---|---|
| 20 | 60,0 |
| 25 | 65,0 |
| 30 | 70,0 |
| 35 | 75,0 |
| 40 | 80,0 |
| 45 | 85,0 |
| 50 | 90,0 |

TABLE 4

| CODE | FINISH |
|---|---|
| C | ELECTROLESS NICKEL |
| B | CADMIUM OLIVE DRAB OVER ELECTROLESS NICKEL |
| ZB | ZINC COBALT OLIVE DRAB OVER ELECTROLESS NICKEL |
| ZN | ZINC NICKEL BLACK PASSIVATE OVER ELECTROLESS NICKEL |

LIST NOT EXHAUSTIVE, SEE PLATING TABLE FOR OTHER OPTIONS

DSH1-21-08-20-1-C

- SERIES
- CONNECTOR INTERFACE
- ANGLE
- SHELL SIZE (TABLE 1)
- ENTRY SIZE (TABLE 2)
- CHAMBER LENGTH - (TABLE 3) - STRAIGHT ONLY
  OMIT FOR ANGLE 2 & 3
- MATERIAL
  ALUMINIUM ALLOY
- FINISH (TABLE 4)

**For tooling and assembly instructions see www.polamco.com**

Backshell supplied without Band (see page 349)
Sealing and strain relief achieved with Heat Shrink Boot (see page 354)
Adhesive if required for assembly (see page 352)
Screenbraid for EMC/RFI screening (see page 350)

DRAWING NOT TO SCALE, DIMENSIONS IN MM

SEE PAGES 18-26 FOR COMPLETE LIST OF AVAILABLE MATERIALS, FINISHES AND CONNECTOR INTERFACES
(DIMENSIONS, FORM AND O RING SUBJECT TO CHANGE DEPENDING ON BACKSHELL MATERIAL AND CONNECTOR INTERFACE)


THIS DRAWING IS THE PROPERTY OF POLAMCO LTD AND MUST NOT BE USED FOR COMMERCIAL PURPOSES WITHOUT WRITTEN CONSENT OF THE COMPANY

# DS (T3) - Internal & External Band Termination Style 2

## Interface F - MIL-DTL-38999 SERIES I

Polamco

**Interconnect Solutions Worldwide**

BAND TERMINATION

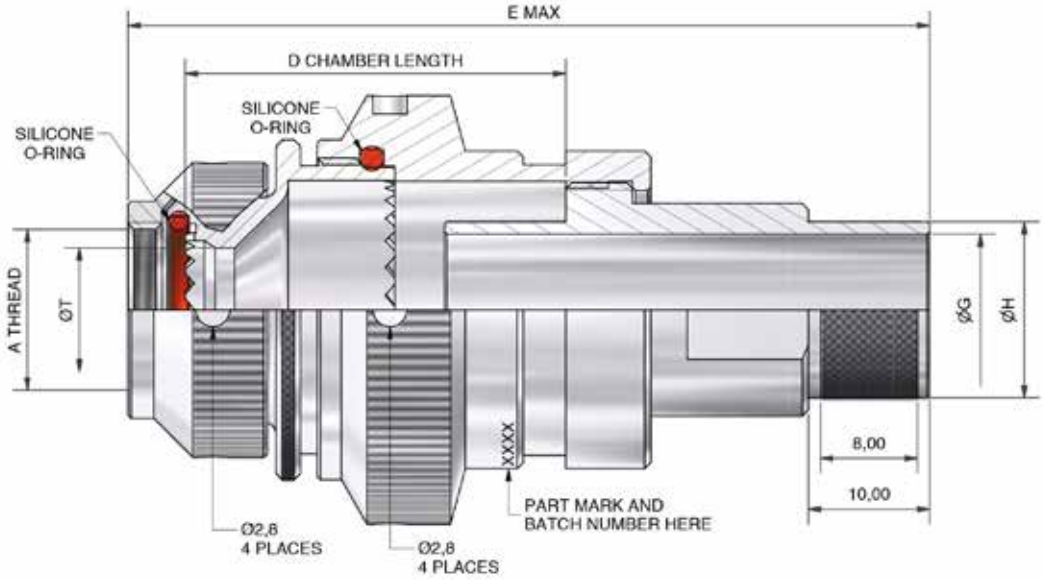


DSF1-11T308-30-1-C

- SERIES
- CONNECTOR INTERFACE
- ANGLE
- SHELL SIZE (TABLE 1)
- STYLE II ASSEMBLY WITH DIRECT-COUPLING SECONDARY ADAPTOR
- ENTRY SIZE (TABLE 2)
- CHAMBER LENGTH IN MM (TABLE 3)
- MATERIAL (TABLE 4)
- FINISH (TABLE 4)

DRAWING NOT TO SCALE, DIMENSIONS IN MM

SEE PAGES 18-26 FOR COMPLETE LIST OF AVAILABLE MATERIALS, FINISHES AND CONNECTOR INTERFACES
(DIMENSIONS, FORM AND O RING SUBJECT TO CHANGE DEPENDING ON BACKSHELL MATERIAL AND CONNECTOR INTERFACE)



THIS DRAWING IS THE PROPERTY OF POLAMCO LTD AND MUST NOT BE USED FOR COMMERCIAL PURPOSES WITHOUT WRITTEN CONSENT OF THE COMPANY

# DS (T3) - Internal & External Band Termination Style 2

## Interface F - MIL-DTL-38999 SERIES I

Polamco

Interconnect Solutions Worldwide



TABLE 1

| SHELL SIZE | A THREAD | ØT | MIN ENTRY |
|---|---|---|---|
| 09 | 7/16 -28UNEF | 6,8 | - |
| 11 | 9/16 -24UNEF | 10,2 | - |
| 13 | 11/16 -24UNEF | 13,1 | 06 |
| 15 | 13/16 -20UNEF | 16,2 | 08 |
| 17 | 15/16 -20UNEF | 19,3 | 11 |
| 19 | 1 1/16 -18UNEF | 22,3 | 13 |
| 21 | 1 3/16 -18UNEF | 25,8 | 14 |
| 23 | 1 5/16 -18UNEF | 28,3 | 16 |
| 25 | 1 7/16 -18UNEF | 31,5 | 17 |

FOR ENTRY SIZE BELOW MINIMUM ENTRY SIZE (TABLE 1)
SEE STANDARD VERSION (NOT STYLE II)

TABLE 2

| ENTRY SIZE | ØG MIN | ØH MIN |
|---|---|---|
| 03 | 4,0 | 6,0 |
| 04 | 5,5 | 7,5 |
| 05 | 7,5 | 9,5 |
| 06 | 9,5 | 11,5 |
| 07 | 10,5 | 12,5 |
| 08 | 12,5 | 14,5 |
| 09 | 14,0 | 16,0 |
| 10 | 15,5 | 17,5 |
| 11 | 17,0 | 19,0 |
| 12 | 18,5 | 20,5 |
| 13 | 20,0 | 22,0 |
| 14 | 21,5 | 23,5 |
| 15 | 23,0 | 25,0 |
| 16 | 25,0 | 27,0 |
| 17 | 28,0 | 30,0 |

TABLE 3

| CHAMBER D | E MAX |
|---|---|
| 30 | 70,0 |
| 35 | 75,0 |
| 40 | 80,0 |
| 45 | 85,0 |
| 50 | 90,0 |

TABLE 4

| CODE | MATERIAL / PLATING |
|---|---|
| 1-C | ALUMINIUM / ELECTROLESS NICKEL |
| 1-B | ALUMINIUM / CADMIUM OLIVE DRAB OVER ELECTROLESS NICKEL |
| 1-ZB | ALUMINIUM / ZINC COBALT OLIVE DRAB OVER ELECTROLESS NICKEL |
| 1-ZN | ALUMINIUM / ZINC NICKEL BLACK PASSIVATE OVER ELECTROLESS NICKEL |
| 4-J | STAINLESS STEEL / PASSIVATE |
| 2-Z | NICKEL ALUMINIUM BRONZE / SHOT BLAST |

LIST NOT EXHAUSTIVE, SEE PLATING TABLE FOR OTHER OPTIONS

**For tooling and assembly instructions see www.polamco.com**

Backshell supplied without Band (see page 349)
Sealing and strain relief achieved with Heat Shrink Boot (see page 354)
Adhesive if required for assembly (see page 352)
Screenbraid for EMC/RFI screening (see page 350)

DRAWING NOT TO SCALE, DIMENSIONS IN MM

SEE PAGES 18-26 FOR COMPLETE LIST OF AVAILABLE MATERIALS, FINISHES AND CONNECTOR INTERFACES
(DIMENSIONS, FORM AND O RING SUBJECT TO CHANGE DEPENDING ON BACKSHELL MATERIAL AND CONNECTOR INTERFACE)

THIS DRAWING IS THE PROPERTY OF POLAMCO LTD AND MUST NOT BE USED FOR
COMMERCIAL PURPOSES WITHOUT WRITTEN CONSENT OF THE COMPANY

# DS (T3) - Internal & External Band Termination Style 2

## Interface F - MIL-DTL-38999 SERIES II

Polamco

**Interconnect Solutions Worldwide**

BAND TERMINATION

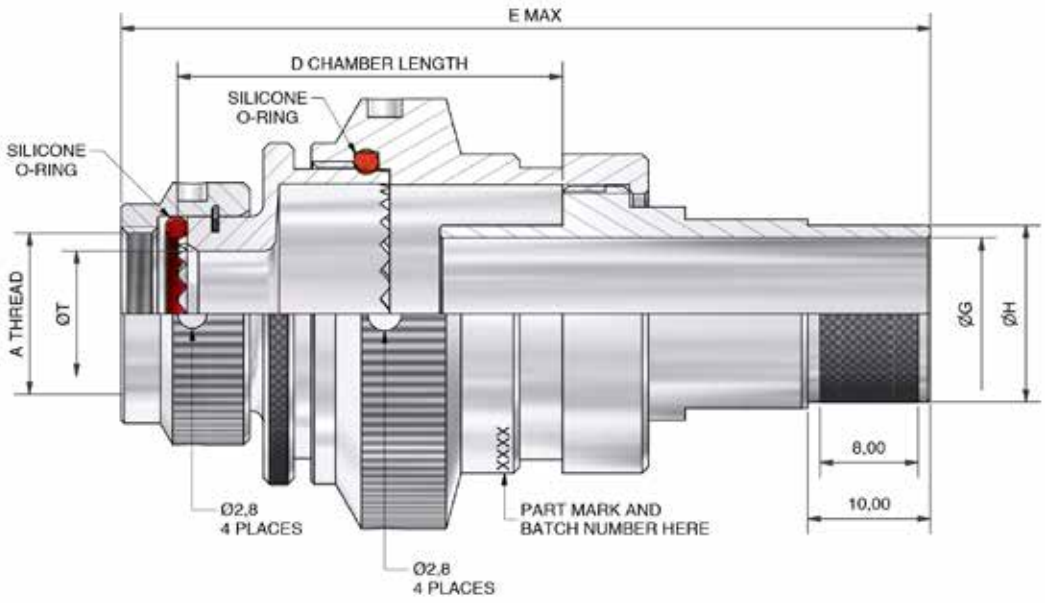


DSF1-10T308-30-1-C

- SERIES
- CONNECTOR INTERFACE
- ANGLE
- SHELL SIZE (TABLE 1)
- STYLE II ASSEMBLY WITH DIRECT-COUPLING SECONDARY ADAPTOR
- ENTRY SIZE (TABLE 2)
- CHAMBER LENGTH IN MM (TABLE 3)
- MATERIAL (TABLE 4)
- FINISH (TABLE 4)

DRAWING NOT TO SCALE, DIMENSIONS IN MM

SEE PAGES 18-26 FOR COMPLETE LIST OF AVAILABLE MATERIALS, FINISHES AND CONNECTOR INTERFACES
(DIMENSIONS, FORM AND O RING SUBJECT TO CHANGE DEPENDING ON BACKSHELL MATERIAL AND CONNECTOR INTERFACE)



THIS DRAWING IS THE PROPERTY OF POLAMCO LTD AND MUST NOT BE USED FOR COMMERCIAL PURPOSES WITHOUT WRITTEN CONSENT OF THE COMPANY

# DS (T3) - Internal & External Band Termination Style 2

## Interface F - MIL-DTL-38999 SERIES II

Polamco

Interconnect Solutions Worldwide



TABLE 1

| SHELL SIZE | A THREAD | ØT | MIN ENTRY |
|---|---|---|---|
| 08 | 7/16 -28UNEF | 6,6 | - |
| 10 | 9/16 -24UNEF | 10,1 | - |
| 12 | 11/16 -24UNEF | 12,9 | 06 |
| 14 | 13/16 -20UNEF | 16,1 | 08 |
| 16 | 15/16 -20UNEF | 19,3 | 11 |
| 18 | 1 1/16 -18UNEF | 21,7 | 13 |
| 20 | 1 3/16 -18UNEF | 24,9 | 14 |
| 22 | 1 5/16 -18UNEF | 28,1 | 16 |
| 24 | 1 7/16 -18UNEF | 31,3 | 17 |

FOR ENTRY SIZE BELOW MINIMUM ENTRY SIZE (TABLE 1)
SEE STANDARD VERSION (NOT STYLE II)

TABLE 2

| ENTRY SIZE | ØG MIN | ØH MIN |
|---|---|---|
| 03 | 4,0 | 6,0 |
| 04 | 5,5 | 7,5 |
| 05 | 7,5 | 9,5 |
| 06 | 9,5 | 11,5 |
| 07 | 10,5 | 12,5 |
| 08 | 12,5 | 14,5 |
| 09 | 14,0 | 16,0 |
| 10 | 15,5 | 17,5 |
| 11 | 17,0 | 19,0 |
| 12 | 18,5 | 20,5 |
| 13 | 20,0 | 22,0 |
| 14 | 21,5 | 23,5 |
| 15 | 23,0 | 25,0 |
| 16 | 25,0 | 27,0 |
| 17 | 28,0 | 30,0 |

TABLE 3

| CHAMBER D | E MAX |
|---|---|
| 30 | 70,0 |
| 35 | 75,0 |
| 40 | 80,0 |
| 45 | 85,0 |
| 50 | 90,0 |

TABLE 4

| CODE | MATERIAL / PLATING |
|---|---|
| 1-C | ALUMINIUM / ELECTROLESS NICKEL |
| 1-B | ALUMINIUM / CADMIUM OLIVE DRAB OVER ELECTROLESS NICKEL |
| 1-ZB | ALUMINIUM / ZINC COBALT OLIVE DRAB OVER ELECTROLESS NICKEL |
| 1-ZN | ALUMINIUM / ZINC NICKEL BLACK PASSIVATE OVER ELECTROLESS NICKEL |
| 4-J | STAINLESS STEEL / PASSIVATE |
| 2-Z | NICKEL ALUMINIUM BRONZE / SHOT BLAST |

LIST NOT EXHAUSTIVE, SEE PLATING TABLE FOR OTHER OPTIONS

**For tooling and assembly instructions see www.polamco.com**

Backshell supplied without Band (see page 349)
Sealing and strain relief achieved with Heat Shrink Boot (see page 354)
Adhesive if required for assembly (see page 352)
Screenbraid for EMC/RFI screening (see page 350)

DRAWING NOT TO SCALE, DIMENSIONS IN MM

SEE PAGES 18-26 FOR COMPLETE LIST OF AVAILABLE MATERIALS, FINISHES AND CONNECTOR INTERFACES
(DIMENSIONS, FORM AND O RING SUBJECT TO CHANGE DEPENDING ON BACKSHELL MATERIAL AND CONNECTOR INTERFACE)

THIS DRAWING IS THE PROPERTY OF POLAMCO LTD AND MUST NOT BE USED FOR
COMMERCIAL PURPOSES WITHOUT WRITTEN CONSENT OF THE COMPANY

# DS (T3) - Internal & External Band Termination Style 2

## Interface H - MIL-DTL-38999 SERIES III & IV

Polamco

**Interconnect Solutions Worldwide**

BAND TERMINATION

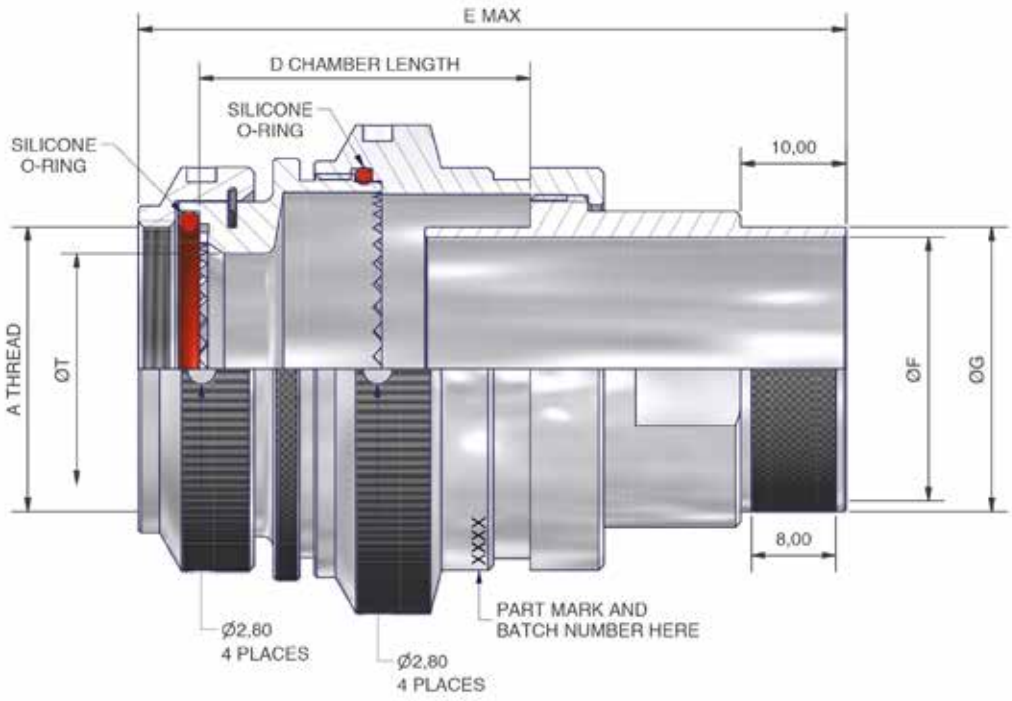


DSH1-11T308-30-1-C

- SERIES
- CONNECTOR INTERFACE
- ANGLE
- SHELL SIZE (TABLE 1)
- STYLE II ASSEMBLY WITH DIRECT-COUPLING SECONDARY ADAPTOR
- ENTRY SIZE (TABLE 2)
- CHAMBER LENGTH IN MM (TABLE 3)
- MATERIAL (TABLE 4)
- FINISH (TABLE 4)

SEE PAGES 18-26 FOR COMPLETE LIST OF AVAILABLE MATERIALS, FINISHES AND CONNECTOR INTERFACES
(DIMENSIONS, FORM AND O RING SUBJECT TO CHANGE DEPENDING ON BACKSHELL MATERIAL AND CONNECTOR INTERFACE)



THIS DRAWING IS THE PROPERTY OF POLAMCO LTD AND MUST NOT BE USED FOR COMMERCIAL PURPOSES WITHOUT WRITTEN CONSENT OF THE COMPANY

# DS (T3) - Internal & External Band Termination Style 2

## Interface H - MIL-DTL-38999 SERIES III & IV

Polamco

**Interconnect Solutions Worldwide**



TABLE 1

| SHELL SIZE | A THREAD | ØT | MAX ENTRY |
|---|---|---|---|
| 09 | M12 x 1.0 | 6,7 | - |
| 11 | M15 x 1.0 | 10,2 | - |
| 13 | M18 x 1.0 | 13,5 | 06 |
| 15 | M22 x 1.0 | 16,2 | 09 |
| 17 | M25 x 1.0 | 19,4 | 11 |
| 19 | M28 x 1.0 | 21,8 | 13 |
| 21 | M31 x 1.0 | 25,1 | 14 |
| 23 | M34 x 1.0 | 28,2 | 16 |
| 25 | M37 x 1.0 | 31,4 | 17 |

FOR ENTRY SIZE BELOW MINIMUM ENTRY SIZE (TABLE 1) SEE STANDARD VERSION (NOT STYLE II)

TABLE 2

| ENTRY SIZE | ØF MIN | ØG MIN |
|---|---|---|
| 03 | 4,0 | 6,0 |
| 04 | 5,5 | 7,5 |
| 05 | 7,5 | 9,5 |
| 06 | 9,5 | 11,5 |
| 07 | 10,5 | 12,5 |
| 08 | 12,5 | 14,5 |
| 09 | 14,0 | 16,0 |
| 10 | 15,5 | 17,5 |
| 11 | 17,0 | 19,0 |
| 12 | 18,5 | 20,5 |
| 13 | 20,0 | 22,0 |
| 14 | 21,5 | 23,5 |
| 15 | 23,0 | 25,0 |
| 16 | 25,0 | 27,0 |
| 17 | 28,0 | 30,0 |

TABLE 3

| CHAMBER D | E MAX |
|---|---|
| 30 | 70,0 |
| 35 | 75,0 |
| 40 | 80,0 |
| 45 | 85,0 |
| 50 | 90,0 |

TABLE 4

| CODE | MATERIAL / PLATING |
|---|---|
| 1-C | ALUMINIUM / ELECTROLESS NICKEL |
| 1-B | ALUMINIUM / CADMIUM OLIVE DRAB OVER ELECTROLESS NICKEL |
| 1-ZB | ALUMINIUM / ZINC COBALT OLIVE DRAB OVER ELECTROLESS NICKEL |
| 1-ZN | ALUMINIUM / ZINC NICKEL BLACK PASSIVATE OVER ELECTROLESS NICKEL |
| 4-J | STAINLESS STEEL / PASSIVATE |
| 2-Z | NICKEL ALUMINIUM BRONZE / SHOT BLAST |

LIST NOT EXHAUSTIVE, SEE PLATING TABLE FOR OTHER OPTIONS

**For tooling and assembly instructions see www.polamco.com**

Backshell supplied without Band (see page 349)
Sealing and strain relief achieved with Heat Shrink Boot (see page 354)
Adhesive if required for assembly (see page 352)
Screenbraid for EMC/RFI screening (see page 350)

DRAWING NOT TO SCALE, DIMENSIONS IN MM

SEE PAGES 18-26 FOR COMPLETE LIST OF AVAILABLE MATERIALS, FINISHES AND CONNECTOR INTERFACES
(DIMENSIONS, FORM AND O RING SUBJECT TO CHANGE DEPENDING ON BACKSHELL MATERIAL AND CONNECTOR INTERFACE)

THIS DRAWING IS THE PROPERTY OF POLAMCO LTD AND MUST NOT BE USED FOR COMMERCIAL PURPOSES WITHOUT WRITTEN CONSENT OF THE COMPANY

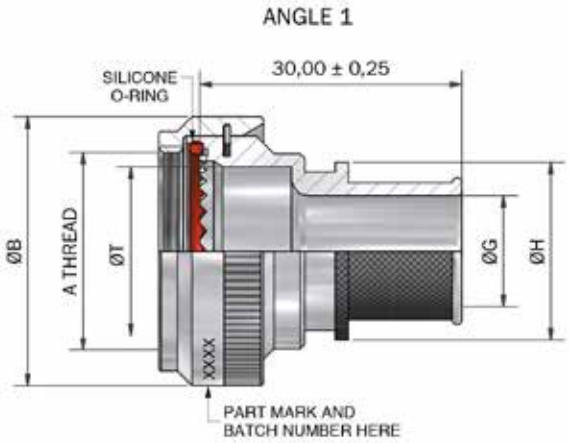


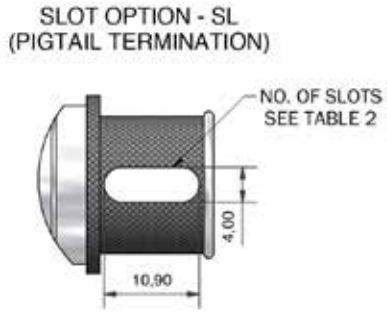


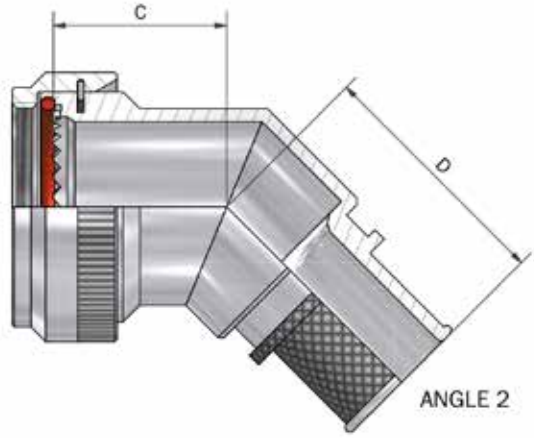


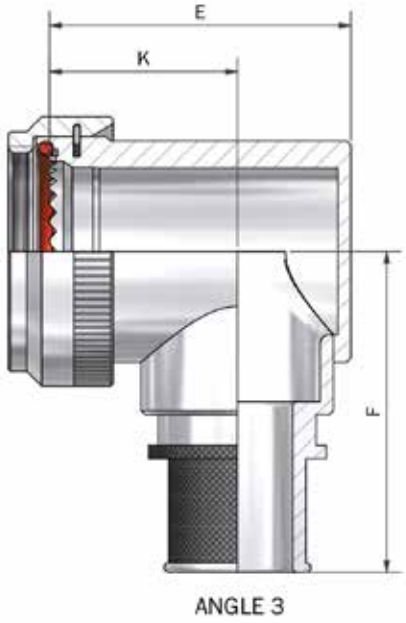


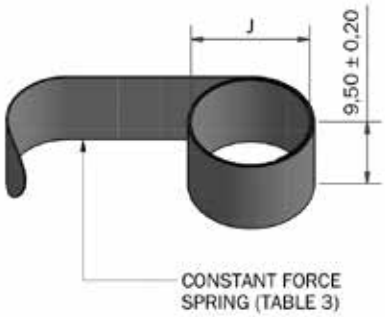


DRAWING NOT TO SCALE, DIMENSIONS IN MM

SEE PAGES 18-26 FOR COMPLETE LIST OF AVAILABLE MATERIALS, FINISHES AND CONNECTOR INTERFACES
(DIMENSIONS, FORM AND O RING SUBJECT TO CHANGE DEPENDING ON BACKSHELL MATERIAL AND CONNECTOR INTERFACE)




THIS DRAWING IS THE PROPERTY OF POLAMCO LTD AND MUST NOT BE USED FOR COMMERCIAL PURPOSES WITHOUT WRITTEN CONSENT OF THE COMPANY

# 91F - Spring Termination

## Interface F - MIL-DTL-38999 SERIES I

Polamco

**Interconnect Solutions Worldwide**



TABLE 1

| SHELL SIZE | A THREAD | ØB MAX | ØT MIN | C ±0,5 | D MAX | E MAX | F MAX | K ±0,5 |
|---|---|---|---|---|---|---|---|---|
| 09 | 7/16-28 UNEF | 18,0 | 6,8 | 16,4 | 25,7 | 22,7 | 30,5 | 15,0 |
| 11 | 9/16-24 UNEF | 21,0 | 10,2 | 17,2 | 26,9 | 26,2 | 32,2 | 17,0 |
| 13 | 11/16-24 UNEF | 24,5 | 13,1 | 17,6 | 27,3 | 29,2 | 33,7 | 18,0 |
| 15 | 13/16-20 UNEF | 27,8 | 16,2 | 18,5 | 28,2 | 32,2 | 35,2 | 20,0 |
| 17 | 15/16-20 UNEF | 30,8 | 19,3 | 19,2 | 29,0 | 35,7 | 36,9 | 21,5 |
| 19 | 1 1/16-18 UNEF | 34,1 | 22,3 | 19,6 | 29,3 | 39,7 | 38,5 | 23,0 |
| 21 | 1 3/16-18 UNEF | 37,3 | 25,8 | 20,4 | 30,1 | 42,2 | 41,1 | 25,0 |
| 23 | 1 5/16-18 UNEF | 41,0 | 28,3 | 20,8 | 30,5 | 45,2 | 41,6 | 26,0 |
| 25 | 1 7/16-18 UNEF | 43,7 | 31,5 | 21,7 | 31,4 | 48,2 | 43,1 | 28,0 |

TABLE 2

| ENTRY SIZE | ØG MIN | ØH MAX | SPRING REF | NO. OF SLOTS * |
|---|---|---|---|---|
| 03 | 4,7 | 13,9 | HE050 | 1 |
| 04 | 6,3 | 13,9 | HE050 | 1 |
| 05 | 7,9 | 15,5 | HE100 | 1 |
| 06 | 9,5 | 17,2 | HE100 | 2 |
| 07 | 11,1 | 18,7 | HE100 | 2 |
| 08 | 12,7 | 20,3 | HE200 | 2 |
| 09 | 14,2 | 21,9 | HE200 | 2 |
| 10 | 15,8 | 23,5 | HE200 | 2 |
| 11 | 17,4 | 25,1 | HE200 | 2 |
| 12 | 19,0 | 26,7 | HE300 | 2 |
| 13 | 20,6 | 28,3 | HE300 | 2 |
| 14 | 22,2 | 29,9 | HE300 | 4 |
| 15 | 23,8 | 31,5 | HE300 | 4 |
| 16 | 25,4 | 33,1 | HE300 | 4 |
| 17 | 27,0 | 34,7 | HE400 | 4 |
| 18 | 28,6 | 36,3 | HE400 | 4 |
| 19 | 30,2 | 37,9 | HE400 | 4 |
| 20 | 31,8 | 39,5 | HE400 | 4 |
| 21 | 33,3 | 41,1 | HE400 | 4 |
| 22 | 35,0 | 42,7 | HE400 | 4 |
| 23 | 36,5 | 44,3 | HE400 | 4 |
| 24 | 38,1 | 45,9 | HE400 | 4 |

TABLE 3

| SPRING REF | J MAX (UNCONSTRAINED) |
|---|---|
| HE 050 | 7,5 |
| HE 100 | 8,0 |
| HE 200 | 12,8 |
| HE 300 | 17,9 |
| HE 400 | 21,8 |

TABLE 4

| CODE | FINISH |
|---|---|
| C | ELECTROLESS NICKEL |
| B | CADMIUM OLIVE DRAB OVER ELECTROLESS NICKEL |
| ZB | ZINC COBALT OLIVE DRAB OVER ELECTROLESS NICKEL |
| ZN | ZINC NICKEL BLACK PASSIVATE OVER ELECTROLESS NICKEL |

LIST NOT EXHAUSTIVE, SEE PLATING TABLE FOR OTHER OPTIONS

91F1-17-08-1-C-HE200

- SERIES
- CONNECTOR INTERFACE
- ANGLE
- SHELL SIZE (TABLE 1)
- ENTRY SIZE (TABLE 2)
- MATERIAL
  - ALUMINIUM ALLOY
- FINISH (TABLE 4)
- *INSERT SL FOR SLOT OPTION
  - OMIT FOR STANDARD
- SPRING REF (TABLE 2)
  - OMIT IF NO SPRING REQUIRED

**For tooling and assembly instructions see www.polamco.com**

Backshell supplied with Spring if specified in the part number
Sealing and strain relief achieved with Heat Shrink Boot (see page 354)
Adhesive if required for assembly (see page 352)
Screenbraid for EMC/RFI screening (see page 350)

DRAWING NOT TO SCALE, DIMENSIONS IN MM

SEE PAGES 18-26 FOR COMPLETE LIST OF AVAILABLE MATERIALS, FINISHES AND CONNECTOR INTERFACES
(DIMENSIONS, FORM AND O RING SUBJECT TO CHANGE DEPENDING ON BACKSHELL MATERIAL AND CONNECTOR INTERFACE)

THIS DRAWING IS THE PROPERTY OF POLAMCO LTD AND MUST NOT BE USED FOR COMMERCIAL PURPOSES WITHOUT WRITTEN CONSENT OF THE COMPANY

# 91F - Spring Termination

## Interface F - MIL-DTL-38999 SERIES II

Polamco

**Interconnect Solutions Worldwide**

SPRING TERMINATION

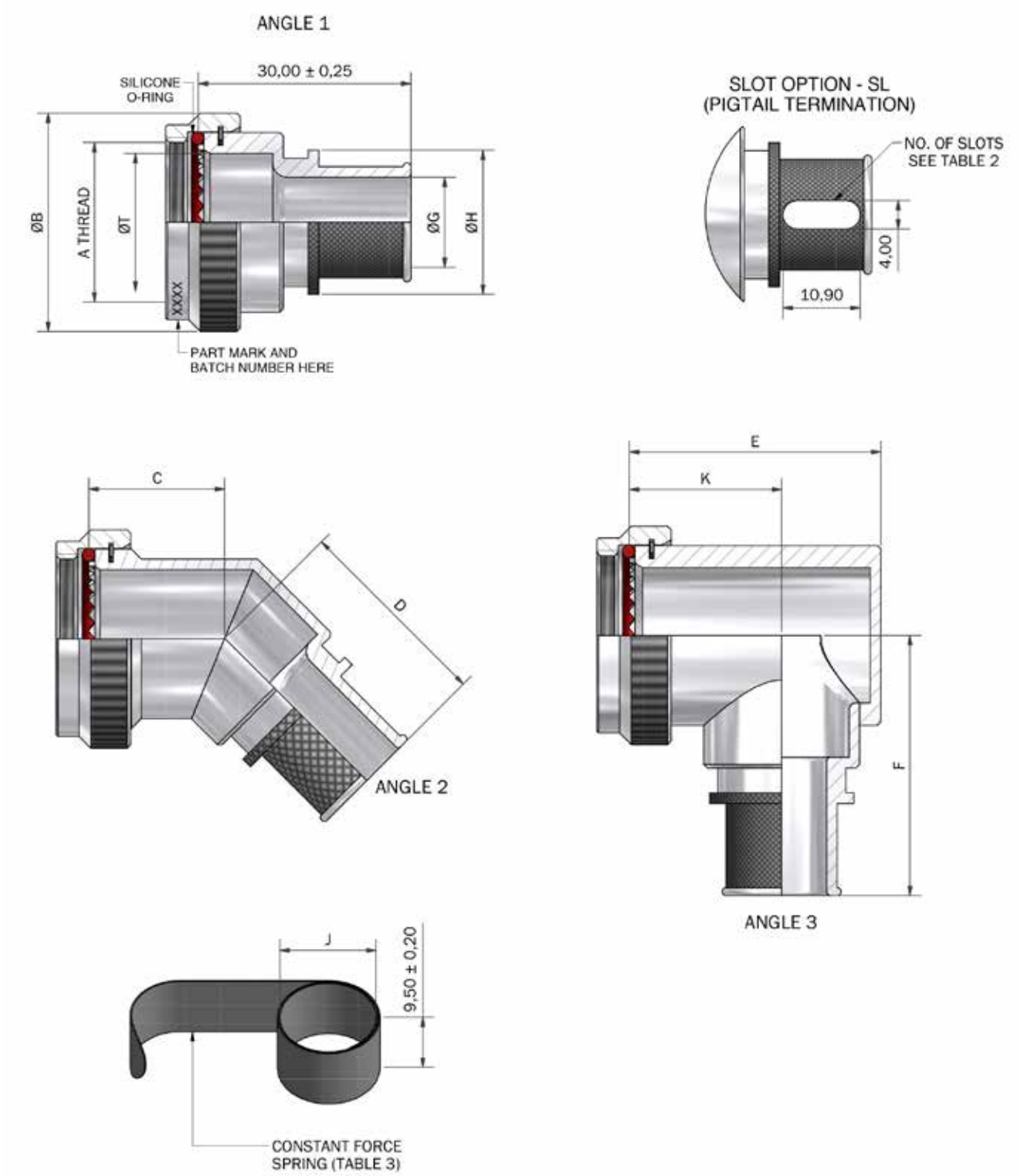


DRAWING NOT TO SCALE, DIMENSIONS IN MM

SEE PAGES 18-26 FOR COMPLETE LIST OF AVAILABLE MATERIALS, FINISHES AND CONNECTOR INTERFACES
(DIMENSIONS, FORM AND O RING SUBJECT TO CHANGE DEPENDING ON BACKSHELL MATERIAL AND CONNECTOR INTERFACE)



THIS DRAWING IS THE PROPERTY OF POLAMCO LTD AND MUST NOT BE USED FOR COMMERCIAL PURPOSES WITHOUT WRITTEN CONSENT OF THE COMPANY

# 91F - Spring Termination

## Interface F - MIL-DTL-38999 SERIES II

Polamco

**Interconnect Solutions Worldwide**



TABLE 1

| SHELL SIZE | A THREAD | ØB MAX | ØT MIN | C ±0,5 | D MAX | E MAX | F MAX | K ±0,5 |
|---|---|---|---|---|---|---|---|---|
| 08 | 7/16-28 UNEF | 18,3 | 6,6 | 16,4 | 25,7 | 22,7 | 30,5 | 15,0 |
| 10 | 9/16-24 UNEF | 21,5 | 10,1 | 17,2 | 26,9 | 26,2 | 32,2 | 17,0 |
| 12 | 11/16-24 UNEF | 24,5 | 12,9 | 17,6 | 27,3 | 29,2 | 33,7 | 18,0 |
| 14 | 13/16-20 UNEF | 27,8 | 16,1 | 18,5 | 28,2 | 32,2 | 35,2 | 20,0 |
| 16 | 15/16-20 UNEF | 30,8 | 19,3 | 19,2 | 29,0 | 35,7 | 36,9 | 21,5 |
| 18 | 1 1/16-18 UNEF | 34,1 | 21,7 | 19,6 | 29,3 | 39,7 | 38,5 | 23,0 |
| 20 | 1 3/16-18 UNEF | 37,3 | 24,9 | 20,4 | 30,1 | 42,2 | 41,1 | 25,0 |
| 22 | 1 5/16-18 UNEF | 40,5 | 28,1 | 20,8 | 30,5 | 45,2 | 41,6 | 26,0 |
| 24 | 1 7/16-18 UNEF | 43,7 | 31,3 | 21,7 | 31,4 | 48,2 | 43,1 | 28,0 |

TABLE 2

| ENTRY SIZE | ØG MIN | ØH MAX | SPRING REF | NO. OF SLOTS * |
|---|---|---|---|---|
| 03 | 4,7 | 14,0 | HE050 | 1 |
| 04 | 6,3 | 14,0 | HE050 | 1 |
| 05 | 7,9 | 15,5 | HE100 | 1 |
| 06 | 9,5 | 17,2 | HE100 | 2 |
| 07 | 11,1 | 18,8 | HE100 | 2 |
| 08 | 12,7 | 20,4 | HE200 | 2 |
| 09 | 14,2 | 22,0 | HE200 | 2 |
| 10 | 15,8 | 23,6 | HE200 | 2 |
| 11 | 17,4 | 25,2 | HE200 | 2 |
| 12 | 19,0 | 26,7 | HE300 | 2 |
| 13 | 20,6 | 28,3 | HE300 | 2 |
| 14 | 22,2 | 29,9 | HE300 | 4 |
| 15 | 23,8 | 31,5 | HE300 | 4 |
| 16 | 25,4 | 33,1 | HE300 | 4 |
| 17 | 27,0 | 34,7 | HE400 | 4 |
| 18 | 28,6 | 36,3 | HE400 | 4 |
| 19 | 30,2 | 37,9 | HE400 | 4 |
| 20 | 31,8 | 39,5 | HE400 | 4 |
| 21 | 33,3 | 41,1 | HE400 | 4 |
| 22 | 35,0 | 42,7 | HE400 | 4 |
| 23 | 36,5 | 44,3 | HE400 | 4 |
| 24 | 38,1 | 45,9 | HE400 | 4 |

TABLE 3

| SPRING REF | J MAX (UNCONSTRAINED) |
|---|---|
| HE 050 | 7,5 |
| HE 100 | 8,0 |
| HE 200 | 12,8 |
| HE 300 | 17,9 |
| HE 400 | 21,8 |

TABLE 4

| CODE | FINISH |
|---|---|
| C | ELECTROLESS NICKEL |
| B | CADMIUM OLIVE DRAB OVER ELECTROLESS NICKEL |
| ZB | ZINC COBALT OLIVE DRAB OVER ELECTROLESS NICKEL |
| ZN | ZINC NICKEL BLACK PASSIVATE OVER ELECTROLESS NICKEL |

LIST NOT EXHAUSTIVE, SEE PLATING TABLE FOR OTHER OPTIONS

91F1-16-08-1-C-HE200

SERIES
CONNECTOR INTERFACE
ANGLE
SHELL SIZE (TABLE 1)
ENTRY SIZE (TABLE 2)
MATERIAL
ALUMINIUM ALLOY
FINISH (TABLE 4)
*INSERT SL FOR SLOT OPTION
OMIT FOR STANDARD
SPRING REF (TABLE 2)
OMIT IF NO SPRING REQUIRED

**For tooling and assembly instructions see www.polamco.com**

Backshell supplied with Spring if specified in the part number
Sealing and strain relief achieved with Heat Shrink Boot (see page 354)
Adhesive if required for assembly (see page 352)
Screenbraid for EMC/RFI screening (see page 350)

DRAWING NOT TO SCALE, DIMENSIONS IN MM

SEE PAGES 18-26 FOR COMPLETE LIST OF AVAILABLE MATERIALS, FINISHES AND CONNECTOR INTERFACES
(DIMENSIONS, FORM AND O RING SUBJECT TO CHANGE DEPENDING ON BACKSHELL MATERIAL AND CONNECTOR INTERFACE)

THIS DRAWING IS THE PROPERTY OF POLAMCO LTD AND MUST NOT BE USED FOR COMMERCIAL PURPOSES WITHOUT WRITTEN CONSENT OF THE COMPANY

# 91H - Spring Termination

## Interface H - MIL-DTL-38999 SERIES III & IV

Polamco

**Interconnect Solutions Worldwide**

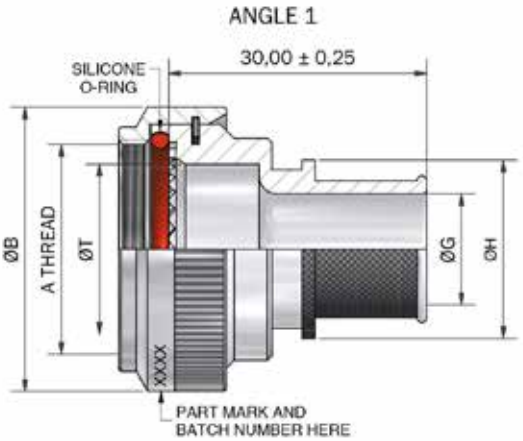


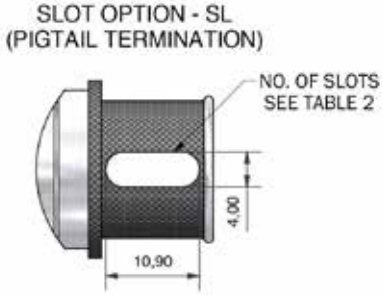


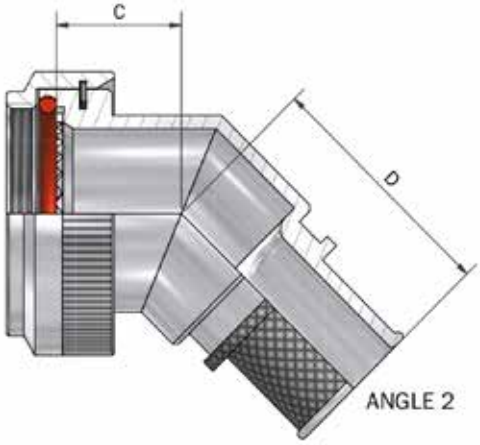


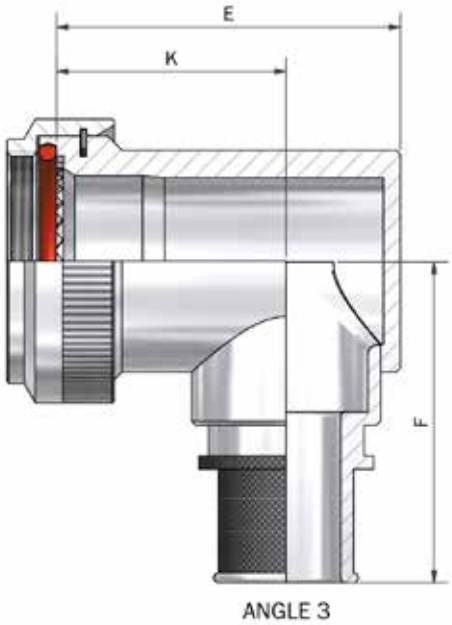


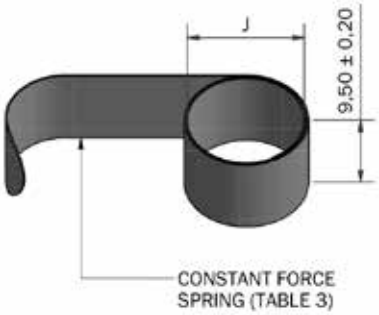


DRAWING NOT TO SCALE, DIMENSIONS IN MM

SEE PAGES 18-26 FOR COMPLETE LIST OF AVAILABLE MATERIALS, FINISHES AND CONNECTOR INTERFACES
(DIMENSIONS, FORM AND O RING SUBJECT TO CHANGE DEPENDING ON BACKSHELL MATERIAL AND CONNECTOR INTERFACE)



THIS DRAWING IS THE PROPERTY OF POLAMCO LTD AND MUST NOT BE USED FOR COMMERCIAL PURPOSES WITHOUT WRITTEN CONSENT OF THE COMPANY

# 91H - Spring Termination

## Interface H - MIL-DTL-38999 SERIES III & IV

Polamco

**Interconnect Solutions Worldwide**



TABLE 1

| SHELL SIZE | A THREAD | ØB MAX | ØT MIN | C MAX | D MAX | E MAX | F MAX | K ±0,5 |
|---|---|---|---|---|---|---|---|---|
| 09 | M12 x 1.0 | 18,0 | 6,7 | 13,1 | 25,7 | 25,7 | 30,5 | 17,5 |
| 11 | M15 x 1.0 | 21,0 | 10,2 | 13,9 | 26,9 | 26,7 | 32,2 | 17,5 |
| 13 | M18 x 1.0 | 24,5 | 13,5 | 14,5 | 27,3 | 31,2 | 33,7 | 20,0 |
| 15 | M22 x 1.0 | 29,0 | 16,2 | 15,5 | 28,2 | 37,2 | 35,2 | 24,5 |
| 17 | M25 x 1.0 | 32,5 | 19,4 | 16,1 | 29,0 | 40,2 | 36,9 | 26,7 |
| 19 | M28 x 1.0 | 35,5 | 21,8 | 16,8 | 29,3 | 44,7 | 38,5 | 27,0 |
| 21 | M31 x 1.0 | 37,0 | 25,1 | 17,1 | 30,1 | 49,2 | 40,1 | 30,5 |
| 23 | M34 x 1.0 | 40,0 | 28,2 | 17,7 | 30,5 | 51,7 | 41,6 | 31,5 |
| 25 | M37 x 1.0 | 43,5 | 31,4 | 18,4 | 31,4 | 53,2 | 43,1 | 28,5 |

TABLE 2

| ENTRY SIZE | ØG MIN | ØH MAX | SPRING REF | NO. OF SLOTS * |
|---|---|---|---|---|
| 03 | 4,7 | 13,9 | HE050 | 1 |
| 04 | 6,3 | 13,9 | HE050 | 1 |
| 05 | 7,9 | 15,5 | HE100 | 1 |
| 06 | 9,5 | 17,2 | HE100 | 2 |
| 07 | 11,1 | 18,7 | HE100 | 2 |
| 08 | 12,7 | 20,3 | HE200 | 2 |
| 09 | 14,2 | 21,9 | HE200 | 2 |
| 10 | 15,8 | 23,5 | HE200 | 2 |
| 11 | 17,4 | 25,1 | HE200 | 2 |
| 12 | 19,0 | 26,7 | HE300 | 2 |
| 13 | 20,6 | 28,3 | HE300 | 2 |
| 14 | 22,2 | 29,9 | HE300 | 4 |
| 15 | 23,8 | 31,5 | HE300 | 4 |
| 16 | 25,4 | 33,1 | HE300 | 4 |
| 17 | 27,0 | 34,7 | HE400 | 4 |
| 18 | 28,6 | 36,3 | HE400 | 4 |
| 19 | 30,2 | 37,9 | HE400 | 4 |
| 20 | 31,8 | 39,5 | HE400 | 4 |
| 21 | 33,3 | 41,1 | HE400 | 4 |
| 22 | 35,0 | 42,7 | HE400 | 4 |
| 23 | 36,5 | 44,3 | HE400 | 4 |
| 24 | 38,1 | 45,9 | HE400 | 4 |

TABLE 3

| SPRING REF | J MAX (UNCONSTRAINED) |
|---|---|
| HE 050 | 7,5 |
| HE 100 | 8,0 |
| HE 200 | 12,8 |
| HE 300 | 17,9 |
| HE 400 | 21,8 |

TABLE 4

| CODE | FINISH |
|---|---|
| C | ELECTROLESS NICKEL |
| B | CADMIUM OLIVE DRAB OVER ELECTROLESS NICKEL |
| ZB | ZINC COBALT OLIVE DRAB OVER ELECTROLESS NICKEL |
| ZN | ZINC NICKEL BLACK PASSIVATE OVER ELECTROLESS NICKEL |

LIST NOT EXHAUSTIVE, SEE PLATING TABLE FOR OTHER OPTIONS

91H1-17-08-1-C-HE200

- SERIES
- CONNECTOR INTERFACE
- ANGLE
- SHELL SIZE (TABLE 1)
- ENTRY SIZE (TABLE 2)
- MATERIAL
  - ALUMINIUM ALLOY
- FINISH (TABLE 4)
- *INSERT SL FOR SLOT OPTION
  - OMIT FOR STANDARD
- SPRING REF (TABLE 2)
  - OMIT IF NO SPRING REQUIRED

**For tooling and assembly instructions see www.polamco.com**

Backshell supplied with Spring if specified in the part number
Sealing and strain relief achieved with Heat Shrink Boot (see page 354)
Adhesive if required for assembly (see page 352)
Screenbraid for EMC/RFI screening (see page 350)

DRAWING NOT TO SCALE, DIMENSIONS IN MM

SEE PAGES 18-26 FOR COMPLETE LIST OF AVAILABLE MATERIALS, FINISHES AND CONNECTOR INTERFACES
(DIMENSIONS, FORM AND O RING SUBJECT TO CHANGE DEPENDING ON BACKSHELL MATERIAL AND CONNECTOR INTERFACE)

THIS DRAWING IS THE PROPERTY OF POLAMCO LTD AND MUST NOT BE USED FOR COMMERCIAL PURPOSES WITHOUT WRITTEN CONSENT OF THE COMPANY

# 91H3 (CE) - Spring Termination Die Cast Swept Elbow

## Interface H - MIL-DTL-38999 SERIES III & IV

Polamco

**Interconnect Solutions Worldwide**

SPRING TERMINATION

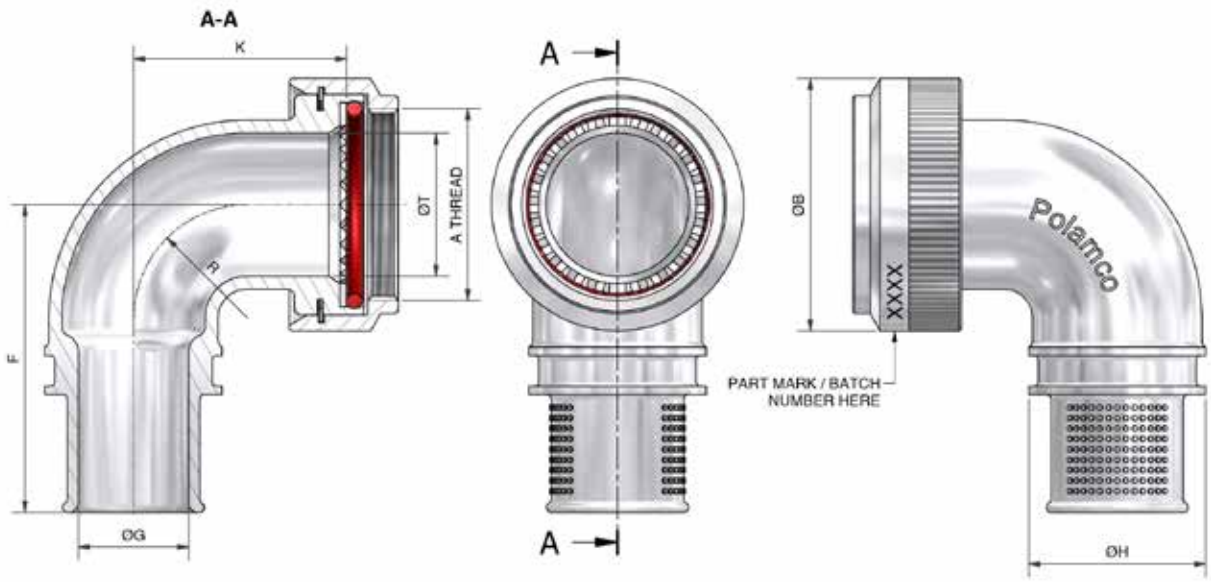


TABLE 1

| SIZE | A THREAD | ØB MAX | ØT MIN | F +/-0,5 | K +/-0,5 | R REF. | ØG MIN | ØH MAX |
|---|---|---|---|---|---|---|---|---|
| 09-04 | M12 x 1.0 | 18,0 | 6,7 | 30,5 | 17,5 | 8,35 | 6,40 | 14,2 |
| 11-05 | M15 x 1.0 | 21,0 | 10,2 | 32,3 | 17,5 | 9,95 | 7,92 | 15,7 |
| 13-07 | M18 x 1.0 | 24,5 | 13,5 | 33,8 | 20,0 | 11,40 | 11,12 | 19,0 |
| 15-08 | M22 x 1.0 | 29,0 | 16,2 | 35,7 | 24,5 | 13,00 | 12,70 | 20,5 |
| 17-10 | M25 x 1.0 | 32,5 | 19,4 | 37,0 | 26,7 | 14,60 | 15,88 | 23,7 |
| 19-12 | M28 x 1.0 | 35,5 | 21,8 | 38,6 | 27,0 | 15,70 | 19,05 | 26,9 |
| 21-14 | M31 x 1.0 | 37,0 | 25,1 | 40,3 | 30,5 | 17,30 | 22,23 | 30,1 |
| 23-16 | M34 x 1.0 | 40,0 | 28,2 | 41,9 | 31,5 | 18,85 | 25,40 | 33,2 |
| 25-16 | M37 x 1.0 | 43,5 | 31,4 | 43,3 | 31,5 | 20,45 | 25,40 | 33,3 |

TABLE 2

| CODE | PLATING |
|---|---|
| B | CADMIUM OLIVE DRAB OVER ELECTROLESS NICKEL |
| C | ELECTROLESS NICKEL |
| G | BLACK ANODISE |
| ZB | ZINC COBALT OLIVE DRAB OVER ELECTROLESS NICKEL |
| ZN | ZINC NICKEL BLACK PASSIVATE |

LIST NOT EXHAUSTIVE, SEE PLATING TABLE FOR OTHER OPTIONS

91H3-15-08-1-B-CE-HE

- SERIES
- CONNECTOR INTERFACE
- ANGLE (3 - 90°)
- SIZE (TABLE 1)
- MATERIAL
  - ALUMINIUM ALLOY
- FINISH (TABLE 2)
- CAST ELBOW OPTION
- HE - SUPPLIED WITH CONSTANT FORCE SPRING
  - OMIT FOR NONE SUPPLIED

**For tooling and assembly instructions see www.polamco.com**

Backshell supplied with Spring if specified in the part number
Sealing and strain relief achieved with Heat Shrink Boot (see page 354)
Adhesive if required for assembly (see page 352)
Screenbraid for EMC/RFI screening (see page 350)

DRAWING NOT TO SCALE, DIMENSIONS IN MM

SEE PAGES 18-26 FOR COMPLETE LIST OF AVAILABLE MATERIALS, FINISHES AND CONNECTOR INTERFACES
(DIMENSIONS, FORM AND O RING SUBJECT TO CHANGE DEPENDING ON BACKSHELL MATERIAL AND CONNECTOR INTERFACE)



THIS DRAWING IS THE PROPERTY OF POLAMCO LTD AND MUST NOT BE USED FOR COMMERCIAL PURPOSES WITHOUT WRITTEN CONSENT OF THE COMPANY

# 91H3 (LP-EB) - Spring Termination
# Low Profile EB Weld

## Interface H - MIL-DTL-38999 SERIES III & IV

Polamco

**Interconnect Solutions Worldwide**



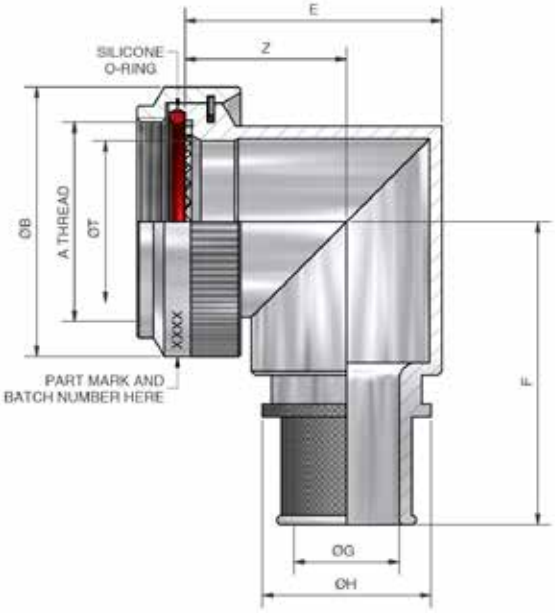


TABLE 1

| SHELL SIZE | A THREAD | B MAX | E MAX | F MAX | T | Z |
|---|---|---|---|---|---|---|
| 09 | M12 x 1.0 | 18,0 | 18,0 | 30,5 | 6,8 | 12,8 |
| 11 | M15 x 1.0 | 21,0 | 21,5 | 32,2 | 10,3 | 14,1 |
| 13 | M18 x 1.0 | 24,5 | 25,0 | 33,7 | 13,6 | 15,8 |
| 15 | M22 x 1.0 | 29,0 | 28,5 | 35,2 | 16,3 | 18,1 |
| 17 | M25 x 1.0 | 32,5 | 31,5 | 36,9 | 19,5 | 19,7 |
| 19 | M28 x 1.0 | 35,5 | 35,0 | 38,5 | 21,9 | 21,5 |
| 21 | M31 x 1.0 | 37,0 | 37,0 | 40,1 | 25,2 | 22,0 |
| 23 | M34 x 1.0 | 40,0 | 40,5 | 41,6 | 28,3 | 24,1 |
| 25 | M37 x 1.0 | 43,5 | 43,5 | 43,1 | 31,5 | 25,8 |

TABLE 2

| ENTRY SIZE | G | H MAX | SPRING REF. |
|---|---|---|---|
| 03 | 4,77 | 13,9 | HE050 |
| 04 | 6,35 | 13,9 | HE050 |
| 05 | 7,92 | 15,5 | HE100 |
| 06 | 9,52 | 17,2 | HE100 |
| 07 | 11,10 | 18,7 | HE100 |
| 08 | 12,70 | 20,3 | HE200 |
| 09 | 14,27 | 21,9 | HE200 |
| 10 | 15,88 | 23,5 | HE200 |
| 11 | 17,47 | 25,1 | HE200 |
| 12 | 19,05 | 26,7 | HE300 |
| 13 | 20,62 | 28,3 | HE300 |
| 14 | 22,23 | 29,9 | HE300 |
| 15 | 23,82 | 31,5 | HE300 |
| 16 | 25,40 | 33,1 | HE300 |
| 17 | 27,00 | 34,7 | HE400 |
| 18 | 28,60 | 36,3 | HE400 |
| 19 | 30,20 | 37,9 | HE400 |
| 20 | 31,80 | 39,5 | HE400 |
| 21 | 33,38 | 41,1 | HE400 |
| 22 | 35,00 | 42,7 | HE400 |
| 23 | 36,58 | 44,3 | HE400 |
| 24 | 38,10 | 45,9 | HE400 |

TABLE 3

| CODE | MATERIAL / PLATING |
|---|---|
| 1-C | ALUMINIUM / ELECTROLESS NICKEL |
| 1-B | ALUMINIUM / CADMIUM OLIVE DRAB OVER ELECTROLESS NICKEL |
| 1-ZB | ALUMINIUM / ZINC COBALT OLIVE DRAB OVER ELECTROLESS NICKEL |
| 1-ZN | ALUMINIUM / ZINC NICKEL BLACK PASSIVATE OVER ELECTROLESS NICKEL |
| 4-J | STAINLESS STEEL / PASSIVATE |
| 2-Z | NICKEL ALUMINIUM BRONZE / SHOT BLAST |

LIST NOT EXHAUSTIVE - FOR COMPREHENSIVE LIST AND SPECS SEE WEBSITE

| SPRING REF. | J |
|---|---|
| HE050 | 7,34 |
| HE100 | 9,22 |
| HE200 | 14,50 |
| HE300 | 18,50 |
| HE400 | 25,00 |

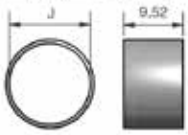


91H3-17-08-1-C-LP-EB-HE200

- SERIES
- CONNECTOR INTERFACE
- ANGLE (3 - 90°)
- SHELL SIZE (TABLE 1)
- ENTRY SIZE (TABLE 2)
- MATERIAL (TABLE 3)
- FINISH (TABLE 3)
- LOW PROFILE VARIANT
- E.B. WELD VARIANT
- SPRING REF. (TABLE 2) OMIT IF NO SPRING REQUIRED

**For tooling and assembly instructions see www.polamco.com**

Backshell supplied with Spring if specified in the part number
Sealing and strain relief achieved with Heat Shrink Boot (see page 354)
Adhesive if required for assembly (see page 352)
Screenbraid for EMC/RFI screening (see page 350)

DRAWING NOT TO SCALE, DIMENSIONS IN MM

SEE PAGES 18-26 FOR COMPLETE LIST OF AVAILABLE MATERIALS, FINISHES AND CONNECTOR INTERFACES
(DIMENSIONS, FORM AND O RING SUBJECT TO CHANGE DEPENDING ON BACKSHELL MATERIAL AND CONNECTOR INTERFACE)

THIS DRAWING IS THE PROPERTY OF POLAMCO LTD AND MUST NOT BE USED FOR COMMERCIAL PURPOSES WITHOUT WRITTEN CONSENT OF THE COMPANY

# 91 (SS) - Spring Termination Stainless Steel

## Interface H - MIL-DTL-38999 SERIES III & IV

Polamco

**Interconnect Solutions Worldwide**

SPRING TERMINATION

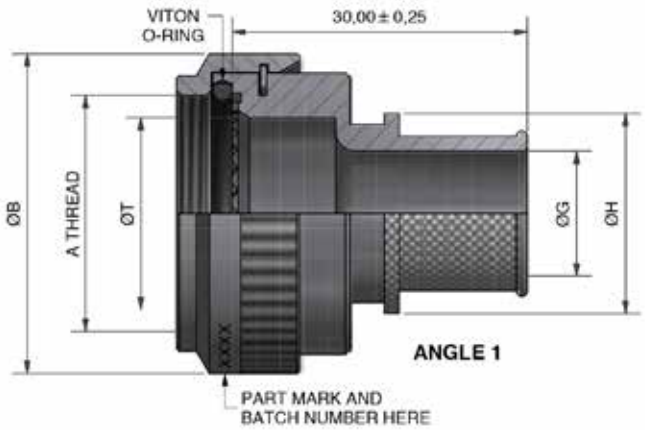


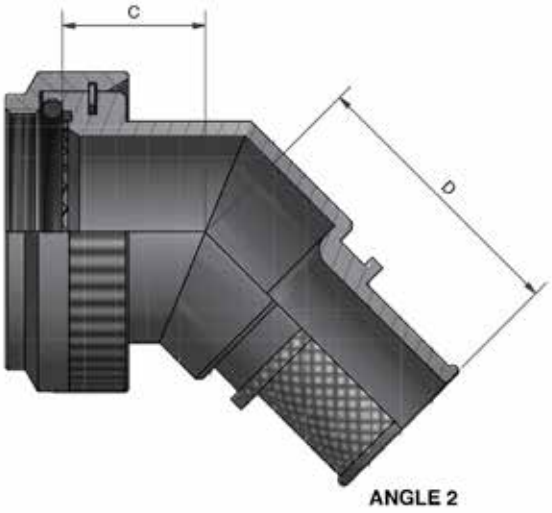


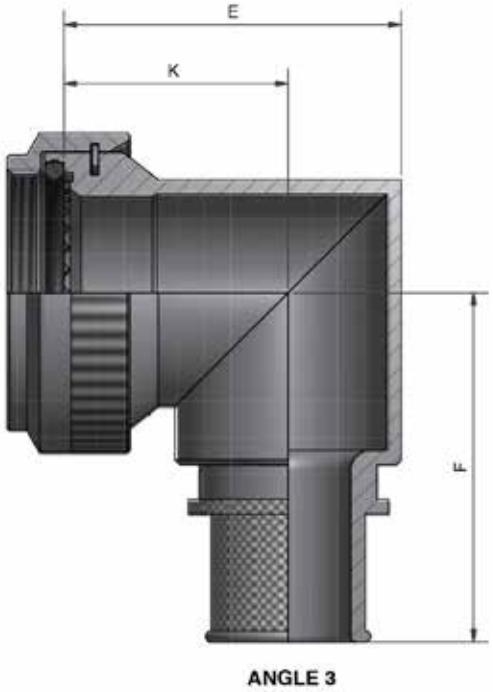


DRAWING NOT TO SCALE, DIMENSIONS IN MM

SEE PAGES 18-26 FOR COMPLETE LIST OF AVAILABLE MATERIALS, FINISHES AND CONNECTOR INTERFACES
(DIMENSIONS, FORM AND O RING SUBJECT TO CHANGE DEPENDING ON BACKSHELL MATERIAL AND CONNECTOR INTERFACE)



THIS DRAWING IS THE PROPERTY OF POLAMCO LTD AND MUST NOT BE USED FOR COMMERCIAL PURPOSES WITHOUT WRITTEN CONSENT OF THE COMPANY

# 91 (SS) - Spring Termination Stainless Steel

## Interface H - MIL-DTL-38999 SERIES III & IV

Polamco

**Interconnect Solutions Worldwide**



TABLE 1

| SHELL SIZE | A THREAD | ØB MAX | ØT MIN | C MAX | D MAX | E MAX | F MAX | K ± 0,5 |
|---|---|---|---|---|---|---|---|---|
| 09 | M12 x 1.0 | 18,0 | 6,7 | 13,1 | 24,7 | 21,5 | 29,1 | 16,3 |
| 11 | M15 x 1.0 | 21,0 | 10,2 | 13,9 | 25,9 | 24,6 | 31,3 | 17,2 |
| 13 | M18 x 1.0 | 24,5 | 13,5 | 14,5 | 26,3 | 28,6 | 33,1 | 19,4 |
| 15 | M22 x 1.0 | 29,0 | 16,2 | 15,5 | 27,2 | 31,3 | 35,0 | 21,0 |
| 17 | M25 x 1.0 | 32,5 | 19,4 | 16,1 | 28,0 | 34,5 | 35,7 | 22,8 |
| 19 | M28 x 1.0 | 35,5 | 21,8 | 16,8 | 28,0 | 38,7 | 37,2 | 25,3 |
| 21 | M31 x 1.0 | 37,0 | 25,1 | 17,1 | 29,1 | 41,0 | 38,9 | 26,1 |
| 23 | M34 x 1.0 | 40,0 | 28,2 | 17,7 | 29,5 | 43,9 | 40,3 | 27,6 |
| 25 | M37 x 1.0 | 43,5 | 31,4 | 18,4 | 30,4 | 46,7 | 45,1 | 29,1 |

TABLE 2

| ENTRY SIZE | ØG MIN | ØH MAX | SPRING REF |
|---|---|---|---|
| 03 | 4,7 | 13,9 | HE050 |
| 04 | 6,3 | 13,9 | HE050 |
| 05 | 7,9 | 15,5 | HE100 |
| 06 | 9,5 | 17,2 | HE100 |
| 07 | 11,1 | 18,7 | HE100 |
| 08 | 12,7 | 20,3 | HE200 |
| 09 | 14,2 | 21,9 | HE200 |
| 10 | 15,8 | 23,5 | HE200 |
| 11 | 17,4 | 25,1 | HE200 |
| 12 | 19,0 | 26,7 | HE300 |
| 13 | 20,6 | 28,3 | HE300 |
| 14 | 22,2 | 29,9 | HE300 |
| 15 | 23,8 | 31,5 | HE300 |
| 16 | 25,4 | 33,1 | HE300 |
| 17 | 27,0 | 34,7 | HE400 |
| 18 | 28,6 | 36,3 | HE400 |
| 19 | 30,2 | 37,9 | HE400 |
| 20 | 31,8 | 39,5 | HE400 |
| 21 | 33,3 | 41,1 | HE400 |
| 22 | 35,0 | 42,7 | HE400 |
| 23 | 36,5 | 44,3 | HE400 |
| 24 | 38,1 | 45,9 | HE400 |

TABLE 3

| CODE | MATERIAL / PLATING |
|---|---|
| 4-J | STAINLESS STEEL 303 S31 / PASSIVATE |
| 46-J | STAINLESS STEEL 316 / PASSIVATE |

LIST NOT EXHAUSTIVE, FOR COMPREHENSIVE LIST AND SPECS, SEE WEBSITE

91H1-17-08-4-J-HE200

SERIES
CONNECTOR INTERFACE
ANGLE
SHELL SIZE (TABLE 1)
ENTRY SIZE (TABLE 2)
MATERIAL (TABLE 3)
FINISH (TABLE 3)
SPRING REF (TABLE 2)
OMIT IF NO SPRING REQUIRED

**For tooling and assembly instructions see www.polamco.com**

Backshell supplied with Spring if specified in the part number
Sealing and strain relief achieved with Heat Shrink Boot (see page 354)
Adhesive if required for assembly (see page 352)
Screenbraid for EMC/RFI screening (see page 350)

DRAWING NOT TO SCALE, DIMENSIONS IN MM

SEE PAGES 18-26 FOR COMPLETE LIST OF AVAILABLE MATERIALS, FINISHES AND CONNECTOR INTERFACES
(DIMENSIONS, FORM AND O RING SUBJECT TO CHANGE DEPENDING ON BACKSHELL MATERIAL AND CONNECTOR INTERFACE)

THIS DRAWING IS THE PROPERTY OF POLAMCO LTD AND MUST NOT BE USED FOR COMMERCIAL PURPOSES WITHOUT WRITTEN CONSENT OF THE COMPANY

# 91H (NB) - Spring Termination
# Nickel Aluminium Bronze
## Interface H - MIL-DTL-38999 SERIES III & IV

Polamco

**Interconnect Solutions Worldwide**

SPRING TERMINATION

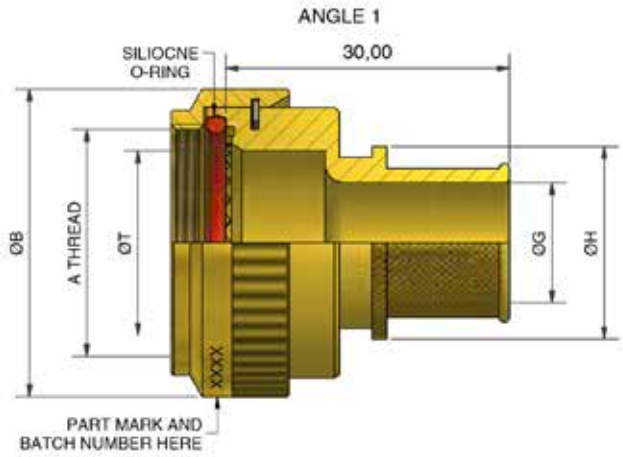


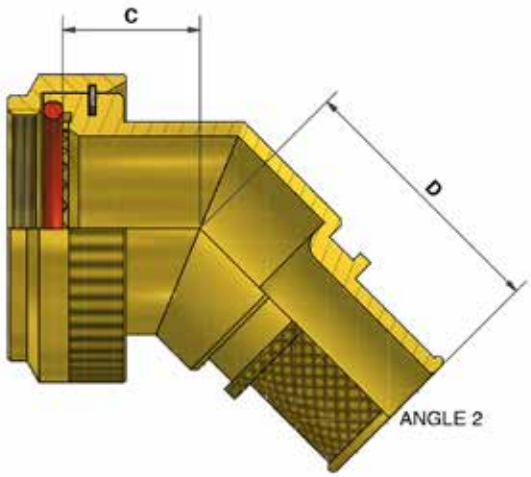


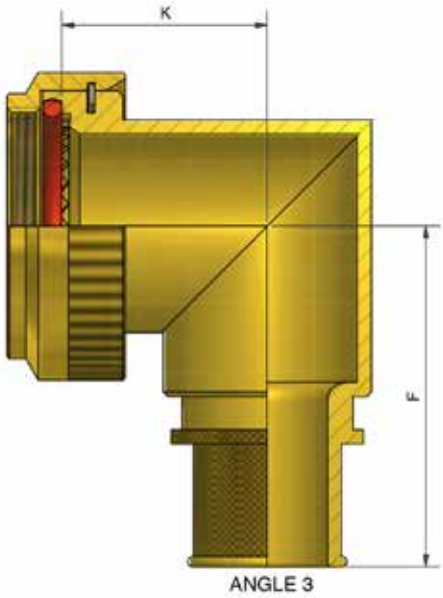


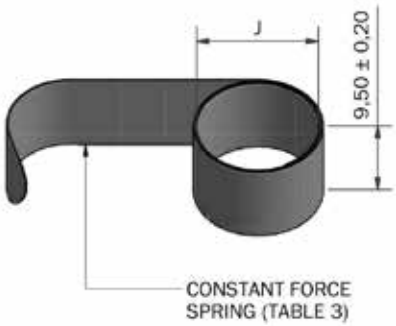


DRAWING NOT TO SCALE, DIMENSIONS IN MM

SEE PAGES 18-26 FOR COMPLETE LIST OF AVAILABLE MATERIALS, FINISHES AND CONNECTOR INTERFACES
(DIMENSIONS, FORM AND O RING SUBJECT TO CHANGE DEPENDING ON BACKSHELL MATERIAL AND CONNECTOR INTERFACE)



THIS DRAWING IS THE PROPERTY OF POLAMCO LTD AND MUST NOT BE USED FOR COMMERCIAL PURPOSES WITHOUT WRITTEN CONSENT OF THE COMPANY

# 91H (NB) - Spring Termination
# Nickel Aluminium Bronze
## Interface H - MIL-DTL-38999 SERIES III & IV

Polamco

**Interconnect Solutions Worldwide**



TABLE 1

| SHELL SIZE | A THREAD | ØB MAX | ØT MIN | C ±0,5 | D ±0,5 | F MAX | K ±0,5 |
|---|---|---|---|---|---|---|---|
| 09 | M12 x 1.0 | 18,0 | 6,7 | 12,0 | 25,1 | 32,4 | 15,5 |
| 11 | M15 x 1.0 | 21,0 | 10,2 | 12,5 | 26,2 | 33,6 | 17,3 |
| 13 | M18 x 1.0 | 24,5 | 13,5 | 13,1 | 26,6 | 34,8 | 18,7 |
| 15 | M22 x 1.0 | 29,0 | 16,2 | 13,5 | 27,5 | 36,6 | 21,3 |
| 17 | M25 x 1.0 | 32,5 | 19,4 | 14,5 | 28,3 | 38,5 | 22,8 |
| 19 | M28 x 1.0 | 35,5 | 21,8 | 15,5 | 28,8 | 40,3 | 24,4 |
| 21 | M31 x 1.0 | 37,0 | 25,1 | 16,0 | 29,7 | 42,0 | 25,1 |
| 23 | M34 x 1.0 | 40,0 | 28,2 | 16,5 | 30,0 | 43,4 | 26,6 |
| 25 | M37 x 1.0 | 43,5 | 31,4 | 17,1 | 30,9 | 44,8 | 28,1 |

TABLE 2

| ENTRY SIZE | ØG MIN | ØH MAX | SPRING REF |
|---|---|---|---|
| 03 | 4,7 | 13,9 | HE050 |
| 04 | 6,3 | 13,9 | HE050 |
| 05 | 7,9 | 15,5 | HE100 |
| 06 | 9,5 | 17,2 | HE100 |
| 07 | 11,1 | 18,7 | HE100 |
| 08 | 12,7 | 20,3 | HE200 |
| 09 | 14,2 | 21,9 | HE200 |
| 10 | 15,8 | 23,5 | HE200 |
| 11 | 17,4 | 25,1 | HE200 |
| 12 | 19,0 | 26,7 | HE300 |
| 13 | 20,6 | 28,3 | HE300 |
| 14 | 22,2 | 29,9 | HE300 |
| 15 | 23,8 | 31,5 | HE300 |
| 16 | 25,4 | 33,1 | HE300 |
| 17 | 27,0 | 34,7 | HE400 |
| 18 | 28,6 | 36,3 | HE400 |
| 19 | 30,2 | 37,9 | HE400 |
| 20 | 31,8 | 39,5 | HE400 |
| 21 | 33,3 | 41,1 | HE400 |
| 22 | 35,0 | 42,7 | HE400 |
| 23 | 36,5 | 44,3 | HE400 |
| 24 | 38,1 | 45,9 | HE400 |

TABLE 3

| SPRING REF | J MAX (UNCONSTRAINED) |
|---|---|
| HE 050 | 7,5 |
| HE 100 | 8,0 |
| HE 200 | 12,8 |
| HE 300 | 17,9 |
| HE 400 | 21,8 |

91H1-17-08-2-Z-HE200

- SERIES
- CONNECTOR INTERFACE
- ANGLE
- SHELL SIZE (TABLE 1)
- ENTRY SIZE (TABLE 2)
- MATERIAL
  - NICKEL ALUMINIUM BRONZE
- FINISH
  - SHOT BLAST
- SPRING REF (TABLE 2)
  - OMIT IF NO SPRING REQUIRED

**For tooling and assembly instructions see www.polamco.com**

Backshell supplied with Spring if specified in the part number
Sealing and strain relief achieved with Heat Shrink Boot (see page 354)
Adhesive if required for assembly (see page 352)
Screenbraid for EMC/RFI screening (see page 350)

DRAWING NOT TO SCALE, DIMENSIONS IN MM

SEE PAGES 18-26 FOR COMPLETE LIST OF AVAILABLE MATERIALS, FINISHES AND CONNECTOR INTERFACES
(DIMENSIONS, FORM AND O RING SUBJECT TO CHANGE DEPENDING ON BACKSHELL MATERIAL AND CONNECTOR INTERFACE)

THIS DRAWING IS THE PROPERTY OF POLAMCO LTD AND MUST NOT BE USED FOR
COMMERCIAL PURPOSES WITHOUT WRITTEN CONSENT OF THE COMPANY

# X91F1 - Spring Termination Composite

## Interface F - MIL-DTL-38999 SERIES I

Polamco

**Interconnect Solutions Worldwide**

SPRING TERMINATION

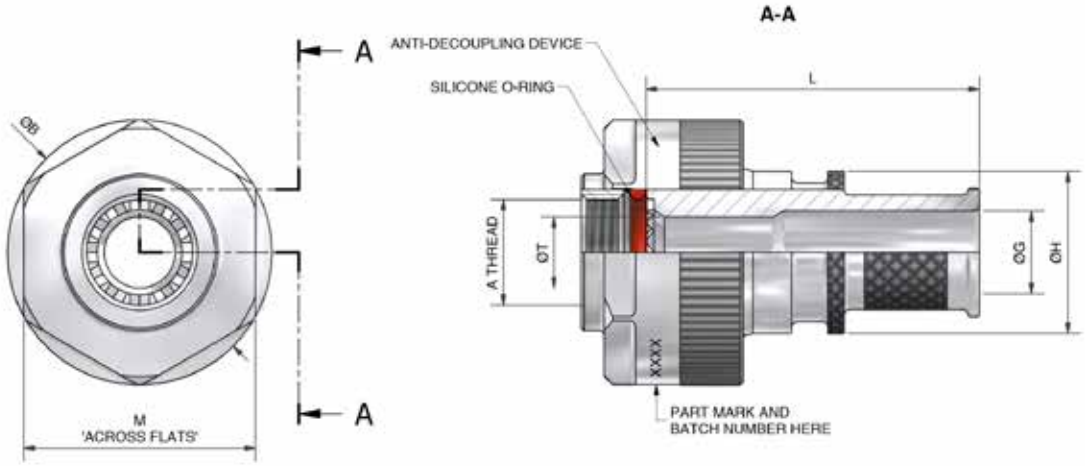


TABLE 1

| SHELL SIZE | A THREAD | ØB MAX | ØT MIN | M A/F |
|---|---|---|---|---|
| 09 | 7/16-28UNEF | 25,4 | 6,8 | 22,2 |
| 11 | 9/16-24UNEF | 26,6 | 10,2 | 22,2 |
| 13 | 11/16-24UNEF | 29,5 | 13,1 | 25,4 |
| 15 | 13/16-20UNEF | 32,6 | 16,2 | 28,6 |
| 17 | 15/16-20UNEF | 37,6 | 19,3 | 31,8 |
| 19 | 1 1/16-18UNEF | 40,8 | 22,3 | 35,1 |
| 21 | 1 3/16-18UNEF | 42,1 | 25,8 | 38,1 |
| 23 | 1 5/16-18UNEF | 45,2 | 28,3 | 41,3 |
| 25 | 1 7/16-18UNEF | 47,5 | 31,5 | 44,5 |

TABLE 2

| ENTRY SIZE | ØG MIN | ØH MAX | SPRING REF. |
|---|---|---|---|
| 03 | 4,7 | 13,9 | HE050 |
| 04 | 6,3 | 13,9 | HE050 |
| 05 | 7,9 | 15,5 | HE100 |
| 06 | 9,5 | 17,2 | HE100 |
| 07 | 11,1 | 18,7 | HE100 |
| 08 | 12,7 | 20,3 | HE200 |
| 09 | 14,2 | 21,9 | HE200 |
| 10 | 15,8 | 23,5 | HE200 |
| 11 | 17,4 | 25,1 | HE200 |
| 12 | 19,0 | 26,7 | HE300 |
| 13 | 20,6 | 28,3 | HE300 |
| 14 | 22,2 | 29,9 | HE300 |
| 15 | 23,8 | 31,5 | HE300 |
| 16 | 25,4 | 33,1 | HE300 |
| 17 | 27,0 | 34,7 | HE400 |
| 18 | 28,6 | 36,3 | HE400 |
| 19 | 30,2 | 37,9 | HE400 |
| 20 | 31,8 | 39,5 | HE400 |
| 21 | 33,3 | 41,1 | HE400 |
| 22 | 35,0 | 42,7 | HE400 |
| 23 | 36,5 | 44,3 | HE400 |
| 24 | 38,1 | 45,9 | HE400 |

TABLE 3

| CODE | MATERIAL / PLATING |
|---|---|
| 74-C | ULTEM / ELECTROLESS NICKEL |
| 74-B | ULTEM / CADMIUM OLIVE DRAB OVER ELECTROLESS NICKEL |
| 74-ZB | ULTEM / ZINC COBALT OLIVE DRAB OVER ELECTROLESS NICKEL |
| 74-ZN | ULTEM / ZINC NICKEL BLACK PASSIVATE OVER ELECTROLESS NICKEL |
| 74-U | ULTEM / UNPLATED |

LIST NOT EXHAUSTIVE, SEE PLATING TABLE FOR OTHER OPTIONS

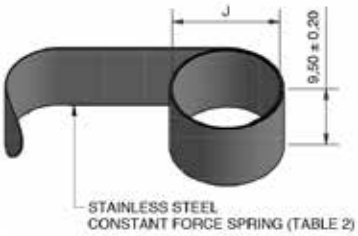


TABLE 4

| SPRING REF. | J MAX (UNCONSTRAINED) |
|---|---|
| HE050 | 7,5 |
| HE100 | 8,0 |
| HE200 | 12,8 |
| HE300 | 17,9 |
| HE400 | 21,8 |

**X91F1-15-08-74-C-TD-L40-HE200**

SERIES
CONNECTOR INTERFACE
ANGLE
SHELL SIZE (TABLE 1)
ENTRY SIZE (TABLE 2)
MATERIAL
ULTEM 2300
FINISH (TABLE 3)
TORQUE DIFFERENTIAL ANTI-DECOUPLING
LENGTH CODE IN MM
OMIT FOR STANDARD 32,00 MM
SPRING REF.
OMIT IF NO SPRING REQUIRED

**For tooling and assembly instructions see www.polamco.com**

Backshell supplied with Spring if specified in the part number
Sealing and strain relief achieved with Heat Shrink Boot (see page 354)
Adhesive if required for assembly (see page 352)
Screenbraid for EMC/RFI screening (see page 350)

DRAWING NOT TO SCALE, DIMENSIONS IN MM

SEE PAGES 18-26 FOR COMPLETE LIST OF AVAILABLE MATERIALS, FINISHES AND CONNECTOR INTERFACES
(DIMENSIONS, FORM AND O RING SUBJECT TO CHANGE DEPENDING ON BACKSHELL MATERIAL AND CONNECTOR INTERFACE)



THIS DRAWING IS THE PROPERTY OF POLAMCO LTD AND MUST NOT BE USED FOR COMMERCIAL PURPOSES WITHOUT WRITTEN CONSENT OF THE COMPANY

# X91F1 - Spring Termination Composite

## Interface F - MIL-DTL-38999 SERIES II

Polamco

**Interconnect Solutions Worldwide**



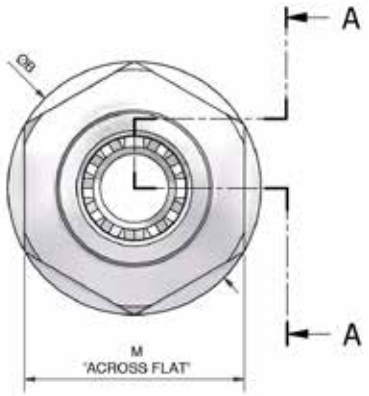


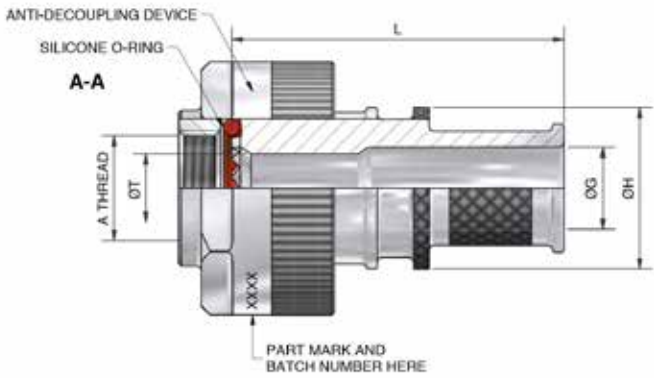


TABLE 1

| SHELL SIZE | A THREAD | ØB MAX | ØT MIN | M A/F |
|---|---|---|---|---|
| 08 | 7/16-28UNEF | 24,4 | 6,6 | 21,2 |
| 10 | 9/16-24UNEF | 25,6 | 10,1 | 21,2 |
| 12 | 11/16-24UNEF | 28,5 | 12,9 | 24,4 |
| 14 | 13/16-20UNEF | 31,6 | 16,1 | 27,6 |
| 16 | 15/16-20UNEF | 36,6 | 19,3 | 30,8 |
| 18 | 1 1/16-18UNEF | 39,8 | 21,7 | 34,1 |
| 20 | 1 3/16-18UNEF | 41,1 | 24,9 | 37,1 |
| 22 | 1 5/16-18UNEF | 44,2 | 28,1 | 40,3 |
| 24 | 1 7/16-18UNEF | 46,5 | 31,3 | 43,5 |

TABLE 2

| ENTRY SIZE | ØG MIN | ØH MAX | SPRING REF. |
|---|---|---|---|
| 03 | 4,7 | 13,9 | HE050 |
| 04 | 6,3 | 13,9 | HE050 |
| 05 | 7,9 | 15,5 | HE100 |
| 06 | 9,5 | 17,2 | HE100 |
| 07 | 11,1 | 18,7 | HE100 |
| 08 | 12,7 | 20,3 | HE200 |
| 09 | 14,2 | 21,9 | HE200 |
| 10 | 15,8 | 23,5 | HE200 |
| 11 | 17,4 | 25,1 | HE200 |
| 12 | 19,0 | 26,7 | HE300 |
| 13 | 20,6 | 28,3 | HE300 |
| 14 | 22,2 | 29,9 | HE300 |
| 15 | 23,8 | 31,5 | HE300 |
| 16 | 25,4 | 33,1 | HE300 |
| 17 | 27,0 | 34,7 | HE400 |
| 18 | 28,6 | 36,3 | HE400 |
| 19 | 30,2 | 37,9 | HE400 |
| 20 | 31,8 | 39,5 | HE400 |
| 21 | 33,3 | 41,1 | HE400 |
| 22 | 35,0 | 42,7 | HE400 |
| 23 | 36,5 | 44,3 | HE400 |
| 24 | 38,1 | 45,9 | HE400 |

TABLE 3

| CODE | MATERIAL / PLATING |
|---|---|
| 74-C | ULTEM / ELECTROLESS NICKEL |
| 74-B | ULTEM / CADMIUM OLIVE DRAB OVER ELECTROLESS NICKEL |
| 74-ZB | ULTEM / ZINC COBALT OLIVE DRAB OVER ELECTROLESS NICKEL |
| 74-ZN | ULTEM / ZINC NICKEL BLACK PASSIVATE OVER ELECTROLESS NICKEL |
| 74-U | ULTEM / UNPLATED |

LIST NOT EXHAUSTIVE, SEE PLATING TABLE FOR OTHER OPTIONS

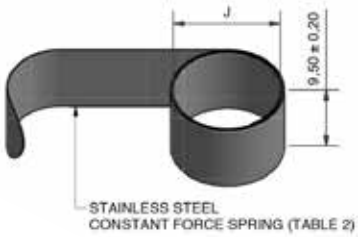


TABLE 4

| SPRING REF. | J MAX (UNCONSTRAINED) |
|---|---|
| HE050 | 7,5 |
| HE100 | 8,0 |
| HE200 | 12,8 |
| HE300 | 17,9 |
| HE400 | 21,8 |

X91F1-14-08-74-C-TD-L40-HE200

- SERIES
- CONNECTOR INTERFACE
- ANGLE
- SHELL SIZE (TABLE 1)
- ENTRY SIZE (TABLE 2)
- MATERIAL
  - ULTEM 2300
- FINISH (TABLE 3)
- TORQUE DIFFERENTIAL ANTI-DECOUPLING
- LENGTH CODE IN MM
  - OMIT FOR STANDARD 32,00 MM
- SPRING REF.
  - OMIT IF NO SPRING REQUIRED

**For tooling and assembly instructions see www.polamco.com**

Backshell supplied with Spring if specified in the part number
Sealing and strain relief achieved with Heat Shrink Boot (see page 354)
Adhesive if required for assembly (see page 352)
Screenbraid for EMC/RFI screening (see page 350)

DRAWING NOT TO SCALE, DIMENSIONS IN MM

SEE PAGES 18-26 FOR COMPLETE LIST OF AVAILABLE MATERIALS, FINISHES AND CONNECTOR INTERFACES
(DIMENSIONS, FORM AND O RING SUBJECT TO CHANGE DEPENDING ON BACKSHELL MATERIAL AND CONNECTOR INTERFACE)

THIS DRAWING IS THE PROPERTY OF POLAMCO LTD AND MUST NOT BE USED FOR
COMMERCIAL PURPOSES WITHOUT WRITTEN CONSENT OF THE COMPANY

# X91H1 - Spring Termination Composite

## Interface H - MIL-DTL-38999 SERIES III & IV

Polamco

**Interconnect Solutions Worldwide**

SPRING TERMINATION

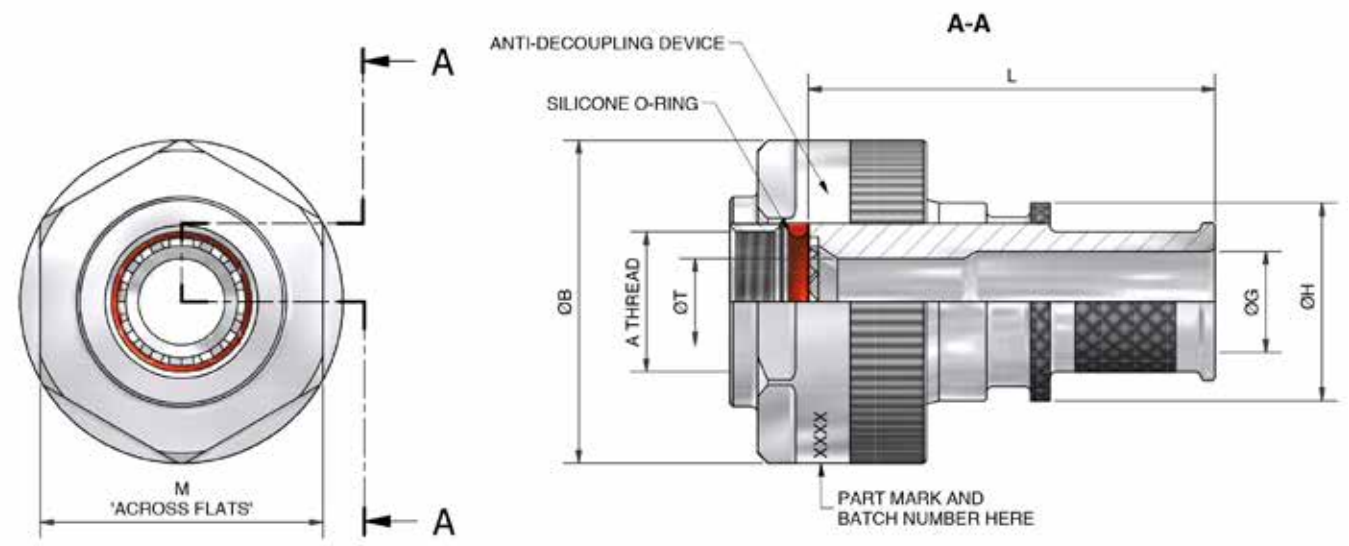


DRAWING NOT TO SCALE, DIMENSIONS IN MM

SEE PAGES 18-26 FOR COMPLETE LIST OF AVAILABLE MATERIALS, FINISHES AND CONNECTOR INTERFACES
(DIMENSIONS, FORM AND O RING SUBJECT TO CHANGE DEPENDING ON BACKSHELL MATERIAL AND CONNECTOR INTERFACE)



THIS DRAWING IS THE PROPERTY OF POLAMCO LTD AND MUST NOT BE USED FOR COMMERCIAL PURPOSES WITHOUT WRITTEN CONSENT OF THE COMPANY

# X91H1 - Spring Termination Composite

## Interface H - MIL-DTL-38999 SERIES III & IV

Polamco

**Interconnect Solutions Worldwide**



TABLE 1

| SHELL SIZE | A THREAD | ØB MAX | ØT MIN | M A/F |
|---|---|---|---|---|
| 09 | M12x1.0 | 25,4 | 6,7 | 22,2 |
| 11 | M15x1.0 | 26,6 | 10,2 | 22,2 |
| 13 | M18x1.0 | 29,5 | 13,5 | 25,4 |
| 15 | M22x1.0 | 32,6 | 16,2 | 28,6 |
| 17 | M25x1.0 | 37,6 | 19,4 | 31,8 |
| 19 | M28x1.0 | 40,8 | 21,8 | 35,1 |
| 21 | M31x1.0 | 42,1 | 25,1 | 38,1 |
| 23 | M34x1.0 | 45,2 | 28,2 | 41,3 |
| 25 | M37x1.0 | 47,5 | 31,4 | 44,5 |

TABLE 2

| ENTRY SIZE | ØG MIN | ØH MAX | SPRING REF. |
|---|---|---|---|
| 03 | 4,7 | 13,9 | HE050 |
| 04 | 6,3 | 13,9 | HE050 |
| 05 | 7,9 | 15,5 | HE100 |
| 06 | 9,5 | 17,2 | HE100 |
| 07 | 11,1 | 18,7 | HE100 |
| 08 | 12,7 | 20,3 | HE200 |
| 09 | 14,2 | 21,9 | HE200 |
| 10 | 15,8 | 23,5 | HE200 |
| 11 | 17,4 | 25,1 | HE200 |
| 12 | 19,0 | 26,7 | HE300 |
| 13 | 20,6 | 28,3 | HE300 |
| 14 | 22,2 | 29,9 | HE300 |
| 15 | 23,8 | 31,5 | HE300 |
| 16 | 25,4 | 33,1 | HE300 |
| 17 | 27,0 | 34,7 | HE400 |
| 18 | 28,6 | 36,3 | HE400 |
| 19 | 30,2 | 37,9 | HE400 |
| 20 | 31,8 | 39,5 | HE400 |
| 21 | 33,3 | 41,1 | HE400 |
| 22 | 35,0 | 42,7 | HE400 |
| 23 | 36,5 | 44,3 | HE400 |
| 24 | 38,1 | 45,9 | HE400 |

TABLE 3

| CODE | MATERIAL / PLATING |
|---|---|
| 74-C | ULTEM / ELECTROLESS NICKEL |
| 74-B | ULTEM / CADMIUM OLIVE DRAB OVER ELECTROLESS NICKEL |
| 74-ZB | ULTEM / ZINC COBALT OLIVE DRAB OVER ELECTROLESS NICKEL |
| 74-ZN | ULTEM / ZINC NICKEL BLACK PASSIVATE OVER ELECTROLESS NICKEL |
| 74-U | ULTEM / UNPLATED |

LIST NOT EXHAUSTIVE, SEE PLATING TABLE FOR OTHER OPTIONS

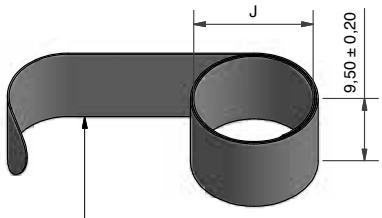


STAINLESS STEEL
CONSTANT FORCE SPRING (TABLE 2)

TABLE 4

| SPRING REF. | J MAX (UNCONSTRAINED) |
|---|---|
| HE050 | 7,5 |
| HE100 | 8,0 |
| HE200 | 12,8 |
| HE300 | 17,9 |
| HE400 | 21,8 |

X91H1-15-08-74-C-TD-L40-HE200

SERIES
CONNECTOR INTERFACE
ANGLE
SHELL SIZE (TABLE 1)
ENTRY SIZE (TABLE 2)
MATERIAL
ULTEM 2300
FINISH (TABLE 3)
TORQUE DIFFERENTIAL ANTI-DECOUPLING
LENGTH CODE IN MM
OMIT FOR STANDARD 32,00 MM
SPRING REF.
OMIT IF NO SPRING REQUIRED

**For tooling and assembly instructions see www.polamco.com**

Backshell supplied with Spring if specified in the part number
Sealing and strain relief achieved with Heat Shrink Boot (see page 354)
Adhesive if required for assembly (see page 352)
Screenbraid for EMC/RFI screening (see page 350)

DRAWING NOT TO SCALE, DIMENSIONS IN MM

SEE PAGES 18-26 FOR COMPLETE LIST OF AVAILABLE MATERIALS, FINISHES AND CONNECTOR INTERFACES
(DIMENSIONS, FORM AND O RING SUBJECT TO CHANGE DEPENDING ON BACKSHELL MATERIAL AND CONNECTOR INTERFACE)

THIS DRAWING IS THE PROPERTY OF POLAMCO LTD AND MUST NOT BE USED FOR COMMERCIAL PURPOSES WITHOUT WRITTEN CONSENT OF THE COMPANY

# 91F3C - Spring Termination Cobra Head

## Interface F - MIL-DTL-38999 SERIES I & II

Polamco

**Interconnect Solutions Worldwide**

SPRING TERMINATION

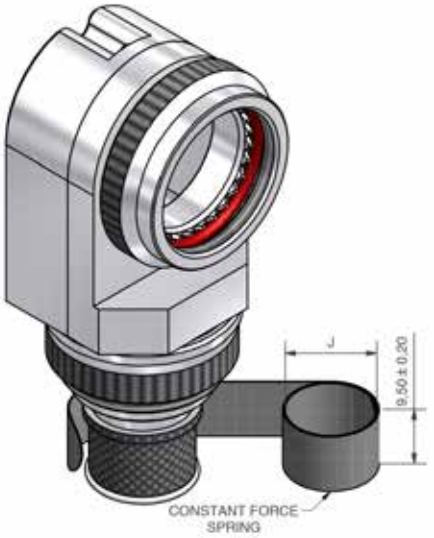


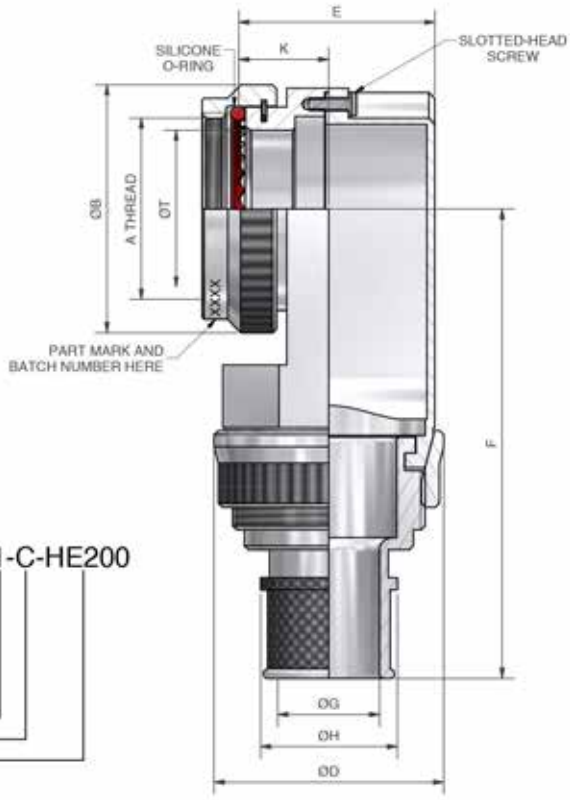


91F3C-16-08-1-C-HE200

- SERIES
- CONNECTOR INTERFACE
- ANGLE (3 - 90°)
- COBRA HEAD STYLE
- DASH NO. (TABLE 1)
- ENTRY SIZE (TABLE 2)
- MATERIAL (TABLE 3)
- PLATING (TABLE 3)
- SPRING REF (SEE TABLE 4) (OMIT IF NO SPRING REQUIRED)

TABLE 1

| DASH NO. | SHELL SIZE SERIES I | SHELL SIZE SERIES II | A THREAD | ØB MAX | ØT MIN | ØD MAX | E MAX | F MAX | K +/-0,5 | MAX ENTRY |
|---|---|---|---|---|---|---|---|---|---|---|
| 08 | 09 | 08 | 7/16-28 UNEF | 18,3 | 6,6 | 18,7 | 17,7 | 48,6 | 8,7 | 04 |
| 10 | 11 | 10 | 9/16-24 UNEF | 21,5 | 10,1 | 21,7 | 19,0 | 52,7 | 8,7 | 06 |
| 12 | 13 | 12 | 11/16-24 UNEF | 24,5 | 12,9 | 24,7 | 22,1 | 52,7 | 8,7 | 08 |
| 14 | 15 | 14 | 13/16-20 UNEF | 27,8 | 16,1 | 24,7 | 22,1 | 56,5 | 10,2 | 08 |
| 16 | 17 | 16 | 15/16-20 UNEF | 30,8 | 19,3 | 28,7 | 25,1 | 58,8 | 11,2 | 10 |
| 18 | 19 | 18 | 1 1/16-18 UNEF | 34,1 | 21,7 | 28,7 | 25,1 | 61,5 | 11,2 | 10 |
| 20 | 21 | 20 | 1 3/16-18 UNEF | 37,3 | 24,9 | 28,7 | 25,1 | 62,5 | 11,2 | 10 |
| 22 | 23 | 22 | 1 5/16-18 UNEF | 40,5 | 28,1 | 31,7 | 28,1 | 65,0 | 12,7 | 12 |
| 24 | 25 | 24 | 1 7/16-18 UNEF | 43,7 | 31,3 | 31,7 | 28,1 | 66,5 | 12,7 | 12 |

TABLE 2

| ENTRY SIZE | ØG MIN | ØH MAX | SPRING REF. |
|---|---|---|---|
| 03 | 4,77 | 9,4 | HE050 |
| 04 | 6,35 | 11,0 | HE050 |
| 05 | 7,92 | 12,6 | HE100 |
| 06 | 9,52 | 14,0 | HE100 |
| 07 | 11,10 | 15,7 | HE100 |
| 08 | 12,70 | 17,0 | HE200 |
| 09 | 14,27 | 19,9 | HE200 |
| 10 | 15,88 | 20,4 | HE200 |
| 11 | 17,47 | 22,1 | HE200 |
| 12 | 19,05 | 23,6 | HE200 |

TABLE 3

| CODE | MATERIAL / PLATING |
|---|---|
| 1-C | ALUMINIUM / ELECTROLESS NICKEL |
| 1-B | ALUMINIUM / CADMIUM OLIVE DRAB OVER ELECTROLESS NICKEL |
| 1-ZB | ALUMINIUM / ZINC COBALT OLIVE DRAB OVER ELECTROLESS NICKEL |
| 1-ZN | ALUMINIUM / ZINC NICKEL BLACK PASSIVATE OVER ELECTROLESS NICKEL |
| 4-J | STAINLESS STEEL / PASSIVATE |
| 2-Z | NICKEL ALUMINIUM BRONZE / SHOT BLAST NON REFLECTIVE |

LIST NOT EXHAUSTIVE, SEE PLATING TABLE FOR OTHER OPTIONS

TABLE 4

| SPRING REF. | J MAX (UNCONSTRAINED) |
|---|---|
| HE050 | 7,5 |
| HE100 | 8,0 |
| HE200 | 12,8 |
| HE300 | 17,9 |
| HE400 | 21,8 |

**For tooling and assembly instructions see www.polamco.com**

Backshell supplied with Spring if specified in the part number
Sealing and strain relief achieved with Heat Shrink Boot (see page 354)
Adhesive if required for assembly (see page 352)
Screenbraid for EMC/RFI screening (see page 350)

DRAWING NOT TO SCALE, DIMENSIONS IN MM

SEE PAGES 18-26 FOR COMPLETE LIST OF AVAILABLE MATERIALS, FINISHES AND CONNECTOR INTERFACES
(DIMENSIONS, FORM AND O RING SUBJECT TO CHANGE DEPENDING ON BACKSHELL MATERIAL AND CONNECTOR INTERFACE)



THIS DRAWING IS THE PROPERTY OF POLAMCO LTD AND MUST NOT BE USED FOR COMMERCIAL PURPOSES WITHOUT WRITTEN CONSENT OF THE COMPANY

# 91H3C - Spring Termination Cobra Head

## Interface H - MIL-DTL-38999 SERIES III & IV

Polamco

**Interconnect Solutions Worldwide**



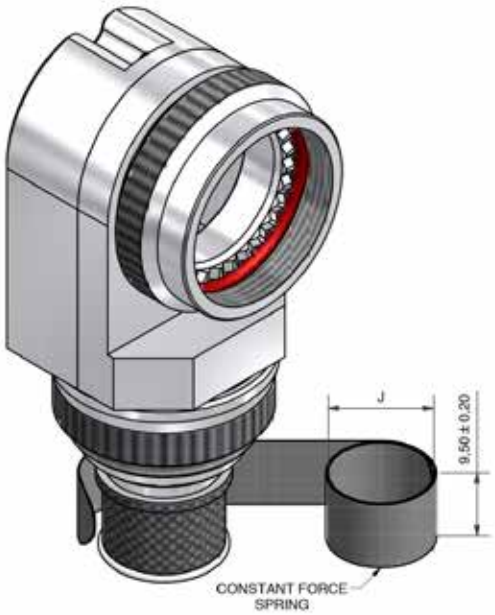


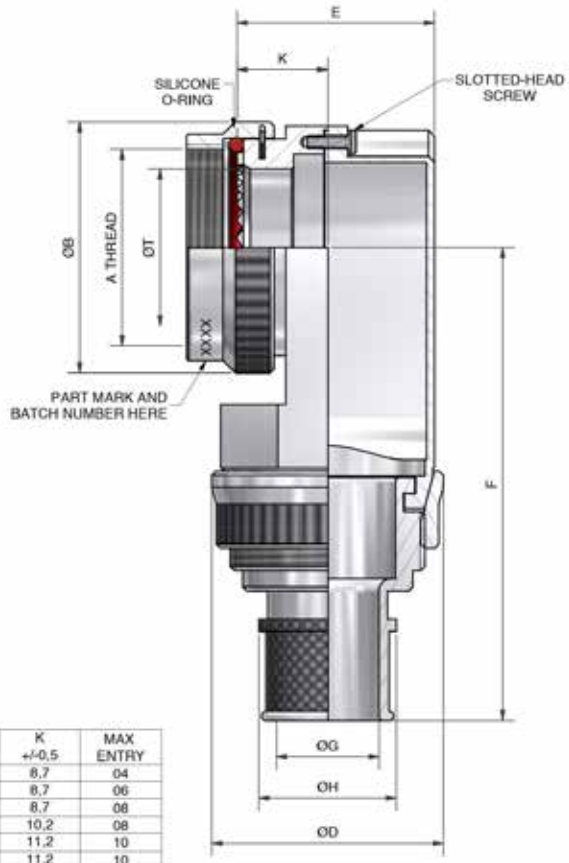


TABLE 1

| SHELL SIZE | A THREAD | ØB MAX | ØT MIN | ØD MAX | E MAX | F MAX | K +/-0,5 | MAX ENTRY |
|---|---|---|---|---|---|---|---|---|
| 09 | M12 x 1.0 | 18,0 | 6,7 | 18,7 | 17,7 | 48,6 | 8,7 | 04 |
| 11 | M15 x 1.0 | 21,0 | 10,2 | 21,7 | 19,0 | 52,7 | 8,7 | 06 |
| 13 | M18 x 1.0 | 24,5 | 13,5 | 24,7 | 22,1 | 52,7 | 8,7 | 08 |
| 15 | M22 x 1.0 | 27,5 | 16,2 | 24,7 | 22,1 | 56,5 | 10,2 | 08 |
| 17 | M25 x 1.0 | 31,0 | 19,4 | 28,7 | 25,1 | 58,8 | 11,2 | 10 |
| 19 | M28 x 1.0 | 34,0 | 21,8 | 28,7 | 25,1 | 61,5 | 11,2 | 10 |
| 21 | M31 x 1.0 | 37,0 | 25,1 | 28,7 | 25,1 | 62,5 | 11,2 | 10 |
| 23 | M34 x 1.0 | 40,0 | 28,2 | 31,7 | 28,1 | 65,0 | 12,7 | 12 |
| 25 | M37 x 1.0 | 43,5 | 31,4 | 31,7 | 28,1 | 66,5 | 12,7 | 12 |

TABLE 2

| ENTRY SIZE | ØG MIN | ØH MAX | SPRING REF. |
|---|---|---|---|
| 03 | 4,77 | 9,4 | HE050 |
| 04 | 6,35 | 11,0 | HE050 |
| 05 | 7,92 | 12,6 | HE100 |
| 06 | 9,52 | 14,0 | HE100 |
| 07 | 11,10 | 15,7 | HE100 |
| 08 | 12,70 | 17,0 | HE200 |
| 09 | 14,27 | 19,9 | HE200 |
| 10 | 15,88 | 20,4 | HE200 |
| 11 | 17,47 | 22,1 | HE200 |
| 12 | 19,05 | 23,6 | HE200 |

TABLE 3

| CODE | MATERIAL / PLATING |
|---|---|
| 1-C | ALUMINIUM / ELECTROLESS NICKEL |
| 1-B | ALUMINIUM / CADMIUM OLIVE DRAB OVER ELECTROLESS NICKEL |
| 1-ZB | ALUMINIUM / ZINC COBALT OLIVE DRAB OVER ELECTROLESS NICKEL |
| 1-ZN | ALUMINIUM / ZINC NICKEL BLACK PASSIVATE OVER ELECTROLESS NICKEL |
| 4-J | STAINLESS STEEL / PASSIVATE |
| 2-Z | NICKEL ALUMINIUM BRONZE / SHOT BLAST NON REFLECTIVE |

LIST NOT EXHAUSTIVE, SEE PLATING TABLE FOR OTHER OPTIONS

TABLE 4

| SPRING REF. | J MAX (UNCONSTRAINED) |
|---|---|
| HE050 | 7,5 |
| HE100 | 8,0 |
| HE200 | 12,8 |
| HE300 | 17,9 |
| HE400 | 21,8 |

91H3C-17-08-1-C-HE200

- SERIES
- CONNECTOR INTERFACE
- ANGLE (3 - 90°)
- COBRA HEAD STYLE
- SHELL SIZE (TABLE 1)
- ENTRY SIZE (TABLE 2)
- MATERIAL (TABLE 3)
- PLATING (TABLE 3)
- SPRING REF (SEE TABLE 4) (OMIT IF NO SPRING REQUIRED)

**For tooling and assembly instructions see www.polamco.com**

Backshell supplied with Spring if specified in the part number
Sealing and strain relief achieved with Heat Shrink Boot (see page 354)
Adhesive if required for assembly (see page 352)
Screenbraid for EMC/RFI screening (see page 350)

DRAWING NOT TO SCALE, DIMENSIONS IN MM

SEE PAGES 18-26 FOR COMPLETE LIST OF AVAILABLE MATERIALS, FINISHES AND CONNECTOR INTERFACES
(DIMENSIONS, FORM AND O RING SUBJECT TO CHANGE DEPENDING ON BACKSHELL MATERIAL AND CONNECTOR INTERFACE)

THIS DRAWING IS THE PROPERTY OF POLAMCO LTD AND MUST NOT BE USED FOR COMMERCIAL PURPOSES WITHOUT WRITTEN CONSENT OF THE COMPANY

# 91H - Spring Termination
# 440 Profile

## Interface H - MIL-DTL-38999 SERIES III & IV

Polamco

**Interconnect Solutions Worldwide**



91H1-**-**-440-*-*-L*

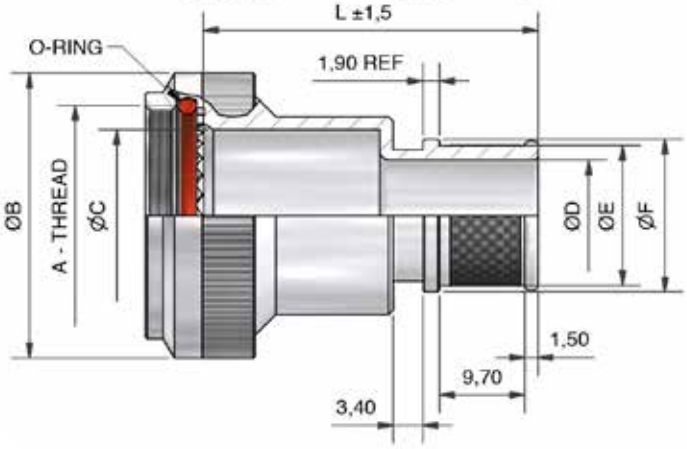


91H2-**-**-440-*-*

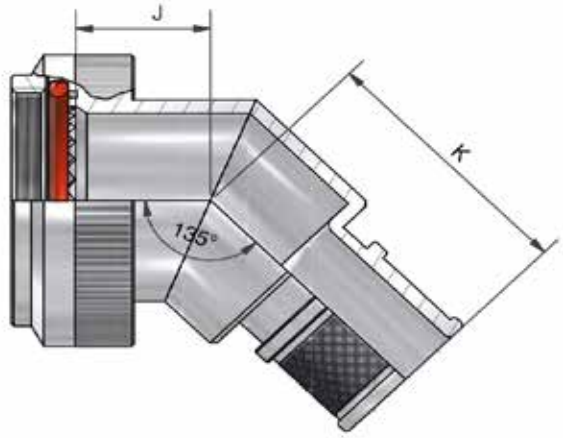


91H3-**-**-440-*-*

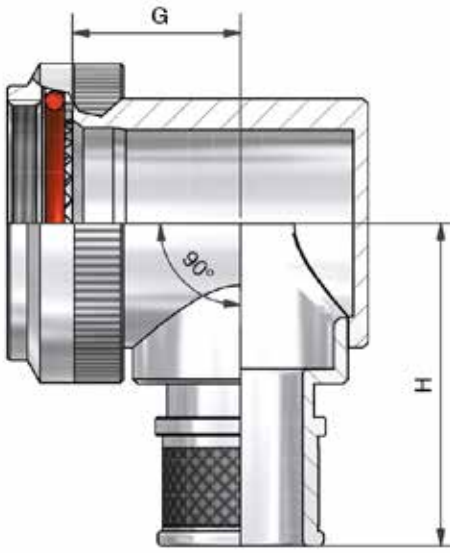


DRAWING NOT TO SCALE, DIMENSIONS IN MM

SEE PAGES 18-26 FOR COMPLETE LIST OF AVAILABLE MATERIALS, FINISHES AND CONNECTOR INTERFACES
(DIMENSIONS, FORM AND O RING SUBJECT TO CHANGE DEPENDING ON BACKSHELL MATERIAL AND CONNECTOR INTERFACE)



THIS DRAWING IS THE PROPERTY OF POLAMCO LTD AND MUST NOT BE USED FOR COMMERCIAL PURPOSES WITHOUT WRITTEN CONSENT OF THE COMPANY

# 91H - Spring Termination
# 440 Profile

## Interface H - MIL-DTL-38999 SERIES III & IV

Polamco

**Interconnect Solutions Worldwide**



TABLE 1

| SHELL SIZE | MAX ENTRY SIZE | A THREAD | ØB MAX | C | G MAX | H MAX | J MAX | K MAX |
|---|---|---|---|---|---|---|---|---|
| 09 | 04 | M12x1,0 | 18,0 | 6,8 | 16,2 | 28,2 | 13,5 | 23,9 |
| 11 | 06 | M15x1,0 | 21,0 | 10,3 | 16,9 | 29,0 | 15,1 | 25,4 |
| 13 | 08 | M18x1,0 | 24,5 | 13,6 | 17,5 | 29,5 | 15,7 | 26,7 |
| 15 | 10 | M22x1,0 | 29,0 | 16,3 | 17,9 | 31,4 | 16,7 | 27,7 |
| 17 | 12 | M25x1,0 | 32,5 | 19,5 | 18,6 | 33,2 | 17,5 | 29,2 |
| 19 | 14 | M28x1,0 | 35,5 | 21,9 | 20,4 | 34,7 | 19,0 | 30,2 |
| 21 | 16 | M31x1,0 | 37,0 | 25,2 | 26,2 | 35,4 | 19,6 | 31,8 |
| 23 | 18 | M34x1,0 | 40,0 | 28,3 | 29,4 | 36,9 | 20,3 | 33,5 |
| 25 | 20 | M37x1,0 | 43,5 | 31,5 | 31,0 | 38,7 | 20,9 | 35,1 |

FORM SEE NOTE 1

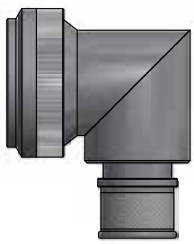

TABLE 2

| ENTRY SIZE | ØD | ØE | ØF |
|---|---|---|---|
| 03 | 4,77 | 7,9 | 9,5 |
| 04 | 6,35 | 9,5 | 11,1 |
| 05 | 7,92 | 11,1 | 12,7 |
| 06 | 9,52 | 12,7 | 14,3 |
| 07 | 11,10 | 14,3 | 15,8 |
| 08 | 12,70 | 15,9 | 17,4 |
| 09 | 14,27 | 17,5 | 19,1 |
| 10 | 15,88 | 19,1 | 20,6 |
| 11 | 17,47 | 20,6 | 22,2 |
| 12 | 19,05 | 22,2 | 23,8 |
| 13 | 20,62 | 23,8 | 25,4 |
| 14 | 22,23 | 25,4 | 27,0 |
| 15 | 23,82 | 27,0 | 28,5 |
| 16 | 25,40 | 28,6 | 30,1 |
| 17 | 27,00 | 30,2 | 31,8 |
| 18 | 28,60 | 31,8 | 33,3 |
| 19 | 30,20 | 33,4 | 35,0 |
| 20 | 31,80 | 34,9 | 36,5 |
| 21 | 33,38 | 36,6 | 38,2 |
| 22 | 35,00 | 38,1 | 39,7 |
| 23 | 36,58 | 39,8 | 41,4 |
| 24 | 38,10 | 41,3 | 42,8 |
| 26 | 41,30 | 44,5 | 46,0 |
| 28 | 44,50 | 47,6 | 49,2 |
| 30 | 47,60 | 50,8 | 52,4 |
| 32 | 50,80 | 54,0 | 55,5 |

TABLE 3

| CODE | MATERIAL / PLATING |
|---|---|
| 1-B | ALUMINIUM / CADMIUM OLIVE DRAB (5-10 MICRONS) QQ-P-416,TYPE II, CLASS 3 OVER ELECTROLESS NICKEL |
| 1-C | ALUMINIUM / ELECTROLESS NICKEL, AMS-C26074, CLASSE 4, GRADE B |
| 1-ZN | ALUMINIUM / ZINC NICKEL BLACK PASSIVATE (5-12 MICRONS) OVER ELECTROLESS NICKEL (8-12 MICRONS), ASTM B 841, CLASS 1 |
| 4-J | STAINLESS STEEL/ PASSIVATE, PER QQ-P-416 OR MI-S-5002 |
| 2-Z | NICKEL ALUMINIUM BRONZE / SHOT BLAST FOR NON-REFLECTIVE FINISH |

LIST NOT EXHAUSTIVE, SEE PLATING TABLE FOR OTHER OPTIONS

* NOTES:

1. G AND H DIMENSIONS ARE INCREASED BY 4,7 WHEN THE PARTS ARE FABRICATED FROM STAINLESS STEEL AND NICKEL ALUMINIUM BRONZE
2. FOR NON-STANDARD EXIT SIZE
   - PLEASE CONSULT SALES OFFICE FOR DETAILS

91H1-17-08-440-1-C-L3

- SERIES
- CONNECTOR INTERFACE
- ANGLE
- SHELL SIZE (TABLE 1)
- ENTRY SIZE (TABLE 2)
- SERIES
- MATERIAL (TABLE 3)
- PLATING (TABLE 3)
- LENGTH CODE (STRAIGHT ONLY)
  MIN CODE L3 (1,5 INCH), 0,5 INCH INCREMENTS)

**For tooling and assembly instructions see www.polamco.com**

Backshell supplied with Spring if specified in the part number
Sealing and strain relief achieved with Heat Shrink Boot (see page 354)
Adhesive if required for assembly (see page 352)
Screenbraid for EMC/RFI screening (see page 350)

DRAWING NOT TO SCALE, DIMENSIONS IN MM

SEE PAGES 18-26 FOR COMPLETE LIST OF AVAILABLE MATERIALS, FINISHES AND CONNECTOR INTERFACES
(DIMENSIONS, FORM AND O RING SUBJECT TO CHANGE DEPENDING ON BACKSHELL MATERIAL AND CONNECTOR INTERFACE)

THIS DRAWING IS THE PROPERTY OF POLAMCO LTD AND MUST NOT BE USED FOR COMMERCIAL PURPOSES WITHOUT WRITTEN CONSENT OF THE COMPANY

# 60F - Memory Ring Termination

## Interface F - MIL-DTL-38999 SERIES I

Polamco

**Interconnect Solutions Worldwide**

MEMORY RING

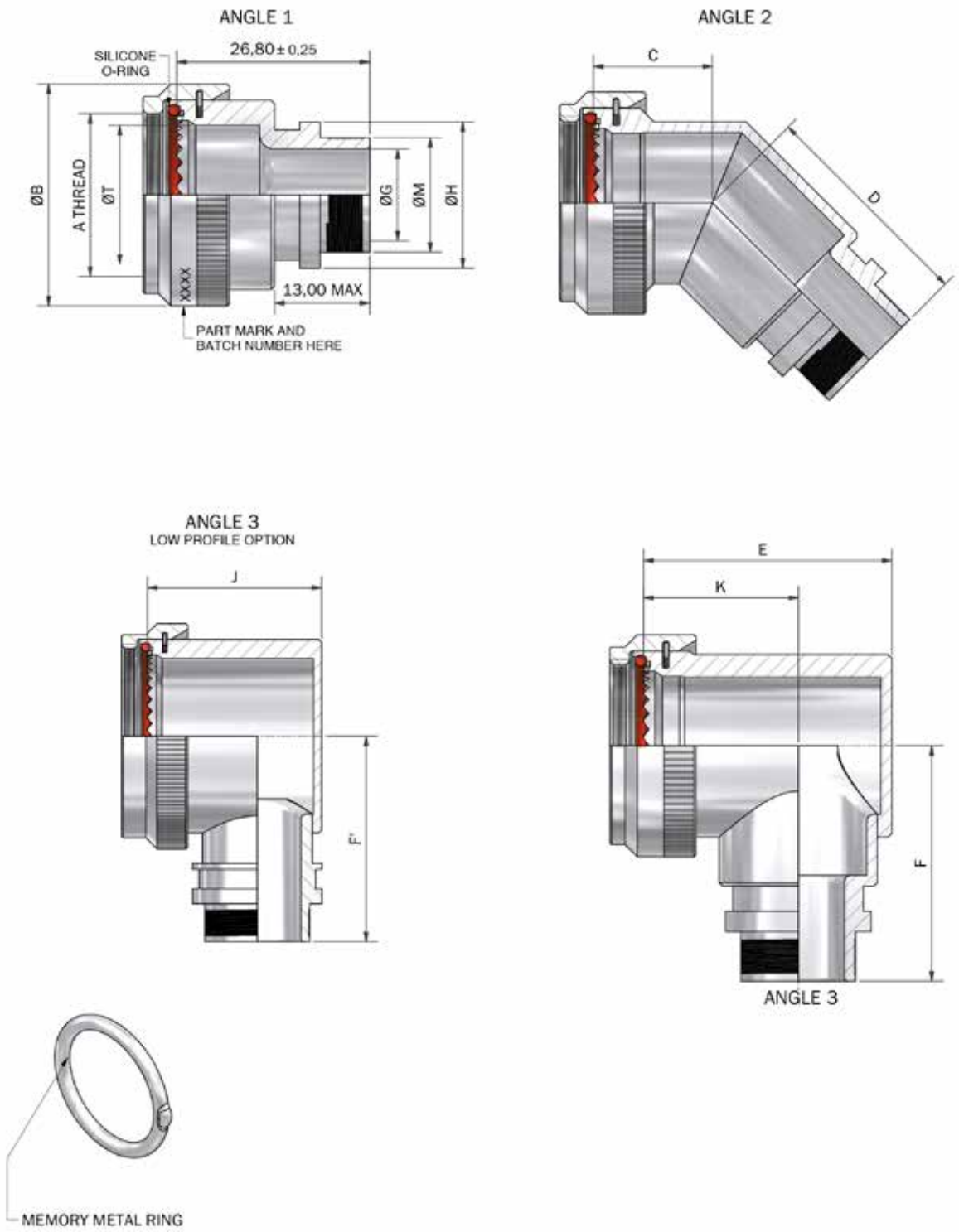


DRAWING NOT TO SCALE, DIMENSIONS IN MM

SEE PAGES 18-26 FOR COMPLETE LIST OF AVAILABLE MATERIALS, FINISHES AND CONNECTOR INTERFACES
(DIMENSIONS, FORM AND O RING SUBJECT TO CHANGE DEPENDING ON BACKSHELL MATERIAL AND CONNECTOR INTERFACE)



THIS DRAWING IS THE PROPERTY OF POLAMCO LTD AND MUST NOT BE USED FOR COMMERCIAL PURPOSES WITHOUT WRITTEN CONSENT OF THE COMPANY

# 60F - Memory Ring Termination

## Interface F - MIL-DTL-38999 SERIES I

Polamco

**Interconnect Solutions Worldwide**

TABLE 1

| SHELL SIZE | A THREAD | ØB MAX | ØT MIN | C ±0,5 | D MAX | E MAX | F MAX | K ±0,5 | J MAX | F' MAX | MAX ENTRY FOR LOW PROFILE OPTION |
|---|---|---|---|---|---|---|---|---|---|---|---|
| 09 | 7/16-28 UNEF | 18,0 | 6,8 | 16,4 | 26,8 | 22,7 | 26,5 | 15,0 | 18,0 | 27,4 | 04 |
| 11 | 9/16-24 UNEF | 21,0 | 10,2 | 17,2 | 27,6 | 26,2 | 28,2 | 17,0 | 22,0 | 29,2 | 05 |
| 13 | 11/16-24 UNEF | 24,5 | 13,1 | 17,6 | 28,0 | 29,2 | 29,7 | 18,0 | 22,0 | 30,7 | 06 |
| 15 | 13/16-20 UNEF | 27,8 | 16,2 | 18,5 | 29,0 | 32,2 | 31,2 | 20,0 | 25,0 | 32,2 | 07 |
| 17 | 15/16-20 UNEF | 30,8 | 19,3 | 19,2 | 29,8 | 35,7 | 32,9 | 21,5 | 27,0 | 33,9 | 08 |
| 19 | 1 1/16-18 UNEF | 34,1 | 22,3 | 19,6 | 30,6 | 39,7 | 34,5 | 23,0 | 28,0 | 35,7 | 10 |
| 21 | 1 3/16-18 UNEF | 37,3 | 25,8 | 20,4 | 30,9 | 42,2 | 36,1 | 25,0 | 29,0 | 37,1 | 10 |
| 23 | 1 5/16-18 UNEF | 41,0 | 28,3 | 20,8 | 31,2 | 45,2 | 37,6 | 26,0 | 31,7 | 38,6 | 10 |
| 25 | 1 7/16-18 UNEF | 43,7 | 31,5 | 21,7 | 32,1 | 48,2 | 39,1 | 28,0 | 31,7 | 40,1 | 10 |

TABLE 2

| ENTRY SIZE | ØG MIN | ØH MAX | ØM MAX |
|---|---|---|---|
| 04 | 6,3 | 14,3 | 9,5 |
| 05 | 7,9 | 15,8 | 11,1 |
| 06 | 9,5 | 17,4 | 12,7 |
| 07 | 11,1 | 19,0 | 14,3 |
| 08 | 12,7 | 20,6 | 15,9 |
| 10 | 15,8 | 23,8 | 19,0 |
| 12 | 19,0 | 27,0 | 22,2 |
| 14 | 22,2 | 30,1 | 25,4 |
| 16 | 25,4 | 33,3 | 28,6 |
| 18 | 28,5 | 36,5 | 31,8 |
| 20 | 31,7 | 39,7 | 34,9 |
| 22 | 34,9 | 42,8 | 38,1 |
| 24 | 38,1 | 46,0 | 41,3 |

TABLE 3

| CODE | FINISH |
|---|---|
| C | ELECTROLESS NICKEL |
| B | CADMIUM OLIVE DRAB OVER ELECTROLESS NICKEL |
| ZB | ZINC COBALT OLIVE DRAB OVER ELECTROLESS NICKEL |
| ZN | ZINC NICKEL BLACK PASSIVATE OVER ELECTROLESS NICKEL |

LIST NOT EXHAUSTIVE, SEE PLATING TABLE FOR OTHER OPTIONS

60F1-17-08-1-C-LP-A

SERIES
CONNECTOR INTERFACE
ANGLE
SHELL SIZE (TABLE 1)
ENTRY SIZE (TABLE 2)
MATERIAL
ALUMINIUM ALLOY
FINISH (TABLE 3)
LOW PROFILE OPTION (90° ONLY)
OMIT IF STANDARD REQUIRED
RING OPTION:
A - RING TO SUIT SINGLE BRAID
B - RING TO SUIT DOUBLE BRAID
OMIT IF NO RING IS REQUIRED

**For tooling and assembly instructions see www.polamco.com**

Backshell supplied with Ring if specified in the part number
Sealing and strain relief achieved with Heat Shrink Boot (see page 354)
Adhesive if required for assembly (see page 352)
Screenbraid for EMC/RFI screening (see page 350)

DRAWING NOT TO SCALE, DIMENSIONS IN MM

SEE PAGES 18-26 FOR COMPLETE LIST OF AVAILABLE MATERIALS, FINISHES AND CONNECTOR INTERFACES
(DIMENSIONS, FORM AND O RING SUBJECT TO CHANGE DEPENDING ON BACKSHELL MATERIAL AND CONNECTOR INTERFACE)

THIS DRAWING IS THE PROPERTY OF POLAMCO LTD AND MUST NOT BE USED FOR
COMMERCIAL PURPOSES WITHOUT WRITTEN CONSENT OF THE COMPANY

# 60F - Memory Ring Termination

## Interface F - MIL-DTL-38999 SERIES II

Polamco

**Interconnect Solutions Worldwide**

MEMORY RING

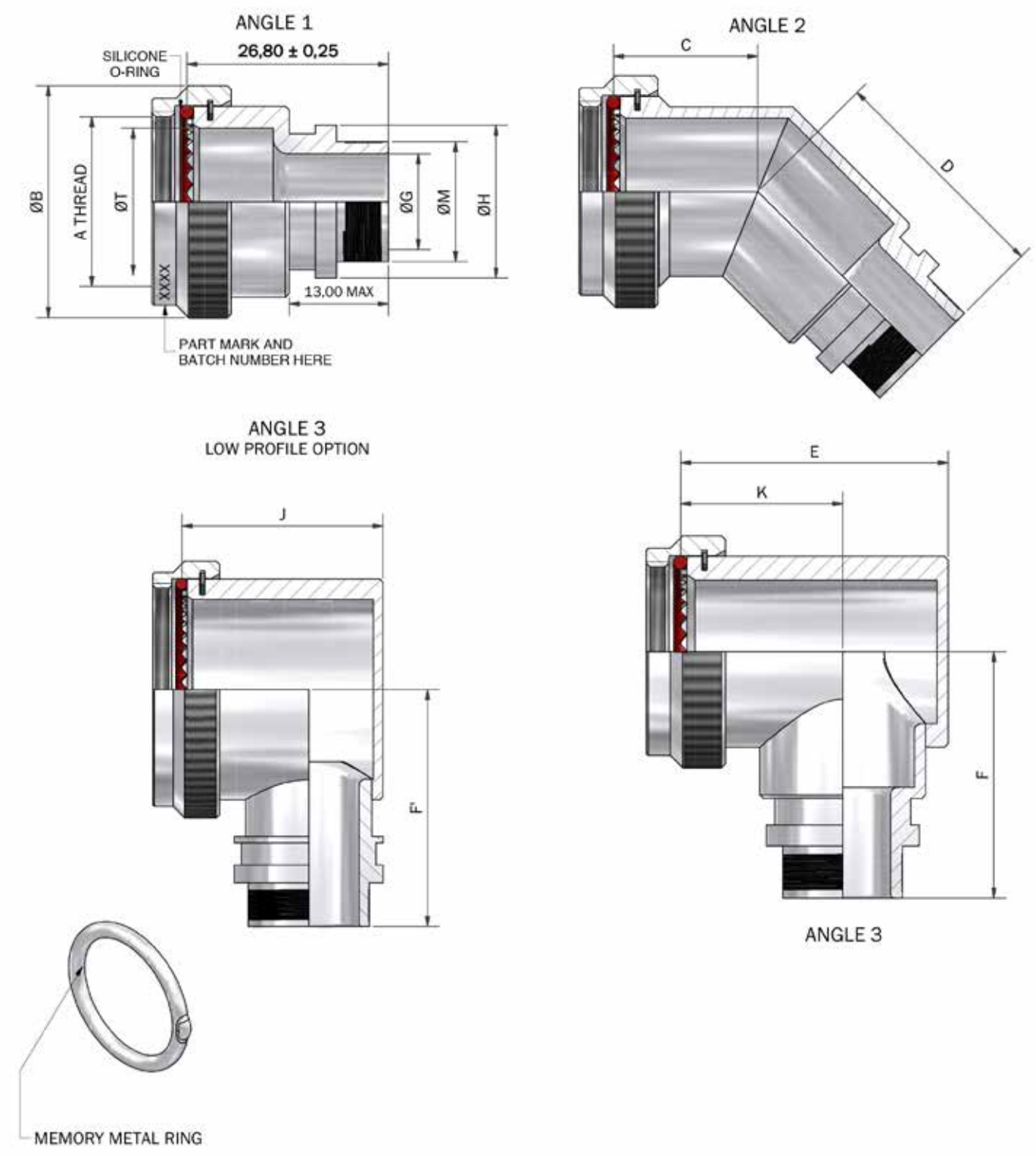


SEE PAGES 18-26 FOR COMPLETE LIST OF AVAILABLE MATERIALS, FINISHES AND CONNECTOR INTERFACES
(DIMENSIONS, FORM AND O RING SUBJECT TO CHANGE DEPENDING ON BACKSHELL MATERIAL AND CONNECTOR INTERFACE)



THIS DRAWING IS THE PROPERTY OF POLAMCO LTD AND MUST NOT BE USED FOR COMMERCIAL PURPOSES WITHOUT WRITTEN CONSENT OF THE COMPANY

# 60F - Memory Ring Termination

## Interface F - MIL-DTL-38999 SERIES II

Polamco

**Interconnect Solutions Worldwide**

TABLE 1

| SHELL SIZE | A THREAD | ØB MAX | ØT MIN | C ±0,5 | D MAX | E MAX | F MAX | K ±0,5 | J MAX | F' MAX | MAX ENTRY FOR LOW PROFILE OPTION |
|---|---|---|---|---|---|---|---|---|---|---|---|
| 08 | 7/16-28 UNEF | 18,3 | 6,6 | 16,4 | 20,6 | 22,7 | 26,5 | 15,0 | 18,0 | 27,4 | 04 |
| 10 | 9/16-24 UNEF | 21,5 | 10,1 | 17,2 | 21,4 | 26,2 | 28,2 | 17,0 | 22,0 | 29,2 | 05 |
| 12 | 11/16-24 UNEF | 24,5 | 12,9 | 17,6 | 22,3 | 29,2 | 29,7 | 18,0 | 22,0 | 30,7 | 06 |
| 14 | 13/16-20 UNEF | 27,8 | 16,1 | 18,5 | 22,7 | 32,2 | 31,2 | 20,0 | 25,0 | 32,2 | 07 |
| 16 | 15/16-20 UNEF | 30,8 | 19,3 | 19,2 | 23,5 | 35,7 | 32,9 | 21,5 | 27,0 | 33,9 | 08 |
| 18 | 1 1/16-18 UNEF | 34,1 | 21,7 | 19,6 | 23,8 | 39,7 | 34,5 | 23,0 | 28,0 | 35,7 | 10 |
| 20 | 1 3/16-18 UNEF | 37,3 | 24,9 | 20,4 | 24,6 | 42,2 | 36,1 | 25,0 | 29,0 | 37,1 | 10 |
| 22 | 1 5/16-18 UNEF | 40,5 | 28,1 | 20,8 | 25,5 | 45,2 | 37,6 | 26,0 | 31,7 | 38,6 | 10 |
| 24 | 1 7/16-18 UNEF | 43,7 | 31,3 | 21,7 | 25,9 | 48,2 | 39,1 | 28,0 | 31,7 | 40,1 | 10 |

TABLE 2

| ENTRY SIZE | ØG MIN | ØH MAX | ØM MAX |
|---|---|---|---|
| 04 | 6,3 | 14,3 | 9,5 |
| 05 | 7,9 | 15,8 | 11,1 |
| 06 | 9,5 | 17,4 | 12,7 |
| 07 | 11,1 | 19,0 | 14,3 |
| 08 | 12,7 | 20,6 | 15,9 |
| 10 | 15,8 | 23,8 | 19,0 |
| 12 | 19,0 | 27,0 | 22,2 |
| 14 | 22,2 | 30,1 | 25,4 |
| 16 | 25,4 | 33,3 | 28,6 |
| 18 | 28,5 | 36,5 | 31,8 |
| 20 | 31,7 | 39,7 | 34,9 |
| 22 | 34,9 | 42,8 | 38,1 |
| 24 | 38,1 | 46,0 | 41,3 |

TABLE 3

| CODE | FINISH |
|---|---|
| C | ELECTROLESS NICKEL |
| B | CADMIUM OLIVE DRAB OVER ELECTROLESS NICKEL |
| ZB | ZINC COBALT OLIVE DRAB OVER ELECTROLESS NICKEL |
| ZN | ZINC NICKEL BLACK PASSIVATE OVER ELECTROLESS NICKEL |

LIST NOT EXHAUSTIVE, SEE PLATING TABLE FOR OTHER OPTIONS

MEMORY RING

60F1-16-08-1-C-LP-A

- SERIES
- CONNECTOR INTERFACE
- ANGLE
- SHELL SIZE (TABLE 1)
- ENTRY SIZE (TABLE 2)
- MATERIAL
  - ALUMINIUM ALLOY
- FINISH (TABLE 3)
- LOW PROFILE OPTION (90° ONLY)
  - OMIT IF STANDARD
- RING OPTION
  - A - RING TO SUIT SINGLE BRAID
  - B - RING TO SUIT DOUBLE BRAID
  - OMIT IF NO RING IS REQUIRED

**For tooling and assembly instructions see www.polamco.com**

Backshell supplied with Ring if specified in the part number
Sealing and strain relief achieved with Heat Shrink Boot (see page 354)
Adhesive if required for assembly (see page 352)
Screenbraid for EMC/RFI screening (see page 350)

DRAWING NOT TO SCALE, DIMENSIONS IN MM

SEE PAGES 18-26 FOR COMPLETE LIST OF AVAILABLE MATERIALS, FINISHES AND CONNECTOR INTERFACES
(DIMENSIONS, FORM AND O RING SUBJECT TO CHANGE DEPENDING ON BACKSHELL MATERIAL AND CONNECTOR INTERFACE)

THIS DRAWING IS THE PROPERTY OF POLAMCO LTD AND MUST NOT BE USED FOR COMMERCIAL PURPOSES WITHOUT WRITTEN CONSENT OF THE COMPANY

# 60H - Memory Ring Termination

## Interface H - MIL-DTL-38999 SERIES III & IV

Polamco

**Interconnect Solutions Worldwide**

MEMORY RING

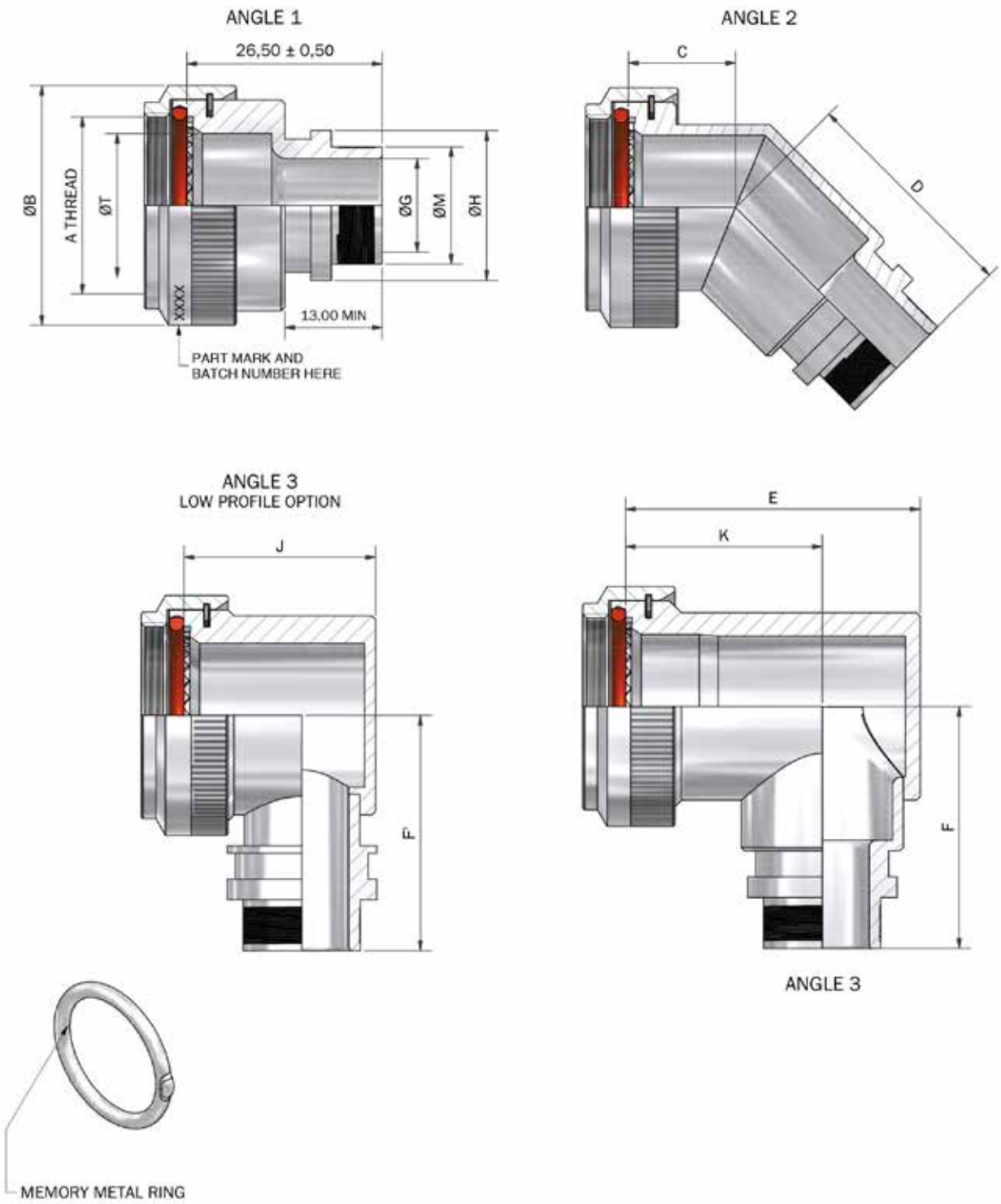


DRAWING NOT TO SCALE, DIMENSIONS IN MM

SEE PAGES 18-26 FOR COMPLETE LIST OF AVAILABLE MATERIALS, FINISHES AND CONNECTOR INTERFACES
(DIMENSIONS, FORM AND O RING SUBJECT TO CHANGE DEPENDING ON BACKSHELL MATERIAL AND CONNECTOR INTERFACE)



THIS DRAWING IS THE PROPERTY OF POLAMCO LTD AND MUST NOT BE USED FOR COMMERCIAL PURPOSES WITHOUT WRITTEN CONSENT OF THE COMPANY

# 60H - Memory Ring Termination

## Interface H - MIL-DTL-38999 SERIES III & IV

Polamco

**Interconnect Solutions Worldwide**

TABLE 1

| SHELL SIZE | A THREAD | ØB MAX | ØT MIN | C MAX | D MAX | E MAX | F MAX | K ±0,5 | J MAX | F' MAX | MAX ENTRY FOR LOW PROFILE OPTION |
|---|---|---|---|---|---|---|---|---|---|---|---|
| 09 | M12 x 1.0 | 18,0 | 6,7 | 13,1 | 26,8 | 25,7 | 26,4 | 17,5 | 18,0 | 27,4 | 04 |
| 11 | M15 x 1.0 | 21,0 | 10,2 | 13,9 | 27,6 | 26,7 | 28,2 | 17,5 | 22,0 | 29,2 | 05 |
| 13 | M18 x 1.0 | 24,5 | 13,5 | 14,5 | 28,0 | 31,2 | 29,7 | 20,0 | 22,0 | 30,7 | 06 |
| 15 | M22 x 1.0 | 29,0 | 16,2 | 15,5 | 29,0 | 37,2 | 31,2 | 24,5 | 25,0 | 32,2 | 07 |
| 17 | M25 x 1.0 | 32,5 | 19,4 | 16,1 | 29,8 | 40,2 | 32,9 | 26,7 | 27,0 | 33,9 | 08 |
| 19 | M28 x 1.0 | 35,5 | 21,8 | 16,8 | 30,6 | 44,7 | 34,5 | 27,0 | 28,0 | 35,7 | 10 |
| 21 | M31 x 1.0 | 37,0 | 25,1 | 17,1 | 30,9 | 49,2 | 36,1 | 30,5 | 29,0 | 37,1 | 10 |
| 23 | M34 x 1.0 | 40,0 | 28,2 | 17,7 | 31,2 | 51,7 | 37,6 | 31,5 | 31,7 | 38,6 | 10 |
| 25 | M37 x 1.0 | 43,5 | 31,4 | 18,4 | 32,1 | 53,2 | 39,1 | 28,5 | 31,7 | 40,1 | 10 |

TABLE 2

| ENTRY SIZE | ØG MIN | ØH MAX | ØM MAX |
|---|---|---|---|
| 04 | 6,3 | 14,3 | 9,5 |
| 05 | 7,9 | 15,8 | 11,1 |
| 06 | 9,5 | 17,4 | 12,7 |
| 07 | 11,1 | 19,0 | 14,3 |
| 08 | 12,7 | 20,6 | 15,9 |
| 10 | 15,8 | 23,8 | 19,0 |
| 12 | 19,0 | 27,0 | 22,2 |
| 14 | 22,2 | 30,1 | 25,4 |
| 16 | 25,4 | 33,3 | 28,6 |
| 18 | 28,5 | 36,5 | 31,8 |
| 20 | 31,7 | 39,7 | 34,9 |
| 22 | 34,9 | 42,8 | 38,1 |
| 24 | 38,1 | 46,0 | 41,3 |

TABLE 3

| CODE | FINISH |
|---|---|
| C | ELECTROLESS NICKEL |
| B | CADMIUM OLIVE DRAB OVER ELECTROLESS NICKEL |
| ZB | ZINC COBALT OLIVE DRAB OVER ELECTROLESS NICKEL |
| ZN | ZINC NICKEL BLACK PASSIVATE OVER ELECTROLESS NICKEL |

LIST NOT EXHAUSTIVE, SEE PLATING TABLE FOR OTHER OPTIONS

60H1-17-08-1-C-A

SERIES
CONNECTOR INTERFACE
ANGLE
SHELL SIZE (TABLE 1)
ENTRY SIZE (TABLE 2)
MATERIAL
ALUMINIUM ALLOY
FINISH (TABLE 3)
LOW PROFILE OPTION (90°ONLY)
OMIT IF STANDARD REQUIRED
RING OPTION
A - RING TO SUIT SINGLE BRAID
B - RING TO SUIT DOUBLE BRAID
OMIT IF NO RING REQUIRED

**For tooling and assembly instructions see www.polamco.com**

Backshell supplied with Ring if specified in the part number
Sealing and strain relief achieved with Heat Shrink Boot (see page 354)
Adhesive if required for assembly (see page 352)
Screenbraid for EMC/RFI screening (see page 350)

DRAWING NOT TO SCALE, DIMENSIONS IN MM

SEE PAGES 18-26 FOR COMPLETE LIST OF AVAILABLE MATERIALS, FINISHES AND CONNECTOR INTERFACES
(DIMENSIONS, FORM AND O RING SUBJECT TO CHANGE DEPENDING ON BACKSHELL MATERIAL AND CONNECTOR INTERFACE)

THIS DRAWING IS THE PROPERTY OF POLAMCO LTD AND MUST NOT BE USED FOR COMMERCIAL PURPOSES WITHOUT WRITTEN CONSENT OF THE COMPANY

# 60 (SS) - Memory Ring Termination Stainless Steel

## Interface H - MIL-DTL-38999 SERIES III & IV

Polamco

**Interconnect Solutions Worldwide**

MEMORY RING

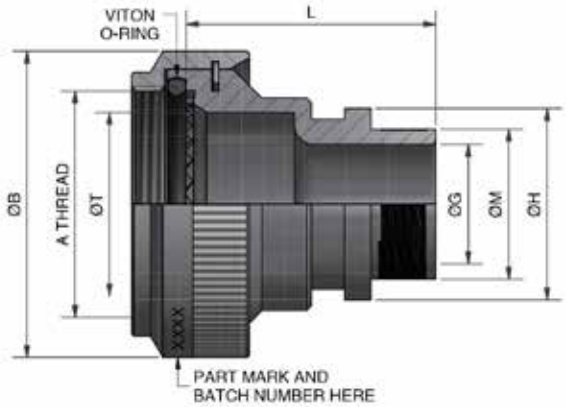


ANGLE 1

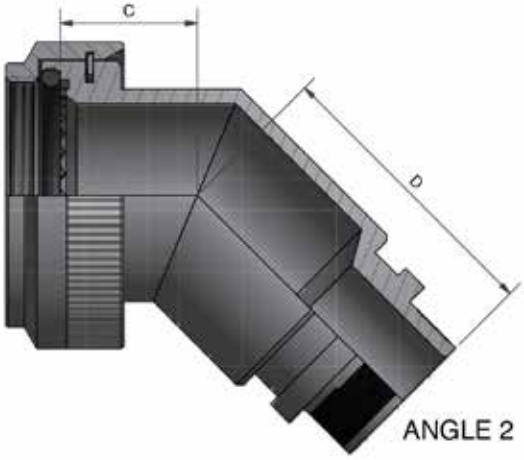


ANGLE 2

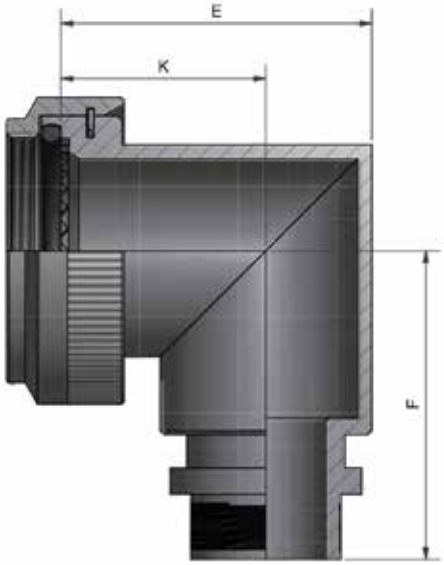


ANGLE 3

DRAWING NOT TO SCALE, DIMENSIONS IN MM

SEE PAGES 18-26 FOR COMPLETE LIST OF AVAILABLE MATERIALS, FINISHES AND CONNECTOR INTERFACES
(DIMENSIONS, FORM AND O RING SUBJECT TO CHANGE DEPENDING ON BACKSHELL MATERIAL AND CONNECTOR INTERFACE)



THIS DRAWING IS THE PROPERTY OF POLAMCO LTD AND MUST NOT BE USED FOR COMMERCIAL PURPOSES WITHOUT WRITTEN CONSENT OF THE COMPANY

# 60 (SS) - Memory Ring Termination Stainless Steel

## Interface H - MIL-DTL-38999 SERIES III & IV

Polamco

**Interconnect Solutions Worldwide**

TABLE 1

| SHELL SIZE | A THREAD | ØB MAX | ØT MIN | C MAX | D MAX | E MAX | F MAX | K ±0,5 |
|---|---|---|---|---|---|---|---|---|
| 09 | M12 x 1.0 | 18,0 | 6,7 | 13,1 | 26,8 | 21,4 | 26,4 | 16,3 |
| 11 | M15 x 1.0 | 21,0 | 10,2 | 13,9 | 27,6 | 24,5 | 28,2 | 17,2 |
| 13 | M18 x 1.0 | 24,5 | 13,5 | 14,5 | 28,0 | 28,5 | 29,7 | 19,4 |
| 15 | M22 x 1.0 | 29,0 | 16,2 | 15,5 | 29,0 | 31,3 | 31,2 | 21,0 |
| 17 | M25 x 1.0 | 32,5 | 19,4 | 16,1 | 29,8 | 34,4 | 32,9 | 22,8 |
| 19 | M28 x 1.0 | 35,5 | 21,8 | 16,8 | 30,6 | 38,7 | 34,5 | 25,3 |
| 21 | M31 x 1.0 | 37,0 | 25,1 | 17,1 | 30,9 | 40,9 | 36,1 | 26,1 |
| 23 | M34 x 1.0 | 40,0 | 28,2 | 17,7 | 31,2 | 43,9 | 37,6 | 27,6 |
| 25 | M37 x 1.0 | 43,5 | 31,4 | 18,4 | 32,1 | 46,6 | 39,1 | 29,1 |

TABLE 2

| ENTRY SIZE | ØG MIN | ØH MAX | ØM MAX |
|---|---|---|---|
| 04 | 6,3 | 14,3 | 9,5 |
| 05 | 7,9 | 15,8 | 11,1 |
| 06 | 9,5 | 17,4 | 12,7 |
| 07 | 11,1 | 19,0 | 14,3 |
| 08 | 12,7 | 20,6 | 15,9 |
| 10 | 15,8 | 23,8 | 19,0 |
| 12 | 19,0 | 27,0 | 22,2 |
| 14 | 22,2 | 30,1 | 25,4 |
| 16 | 25,4 | 33,3 | 28,6 |
| 18 | 28,5 | 36,5 | 31,8 |
| 20 | 31,7 | 39,7 | 34,9 |
| 22 | 34,9 | 42,8 | 38,1 |
| 24 | 38,1 | 46,0 | 41,3 |

TABLE 3

| CODE | MATERIAL / FINISH |
|---|---|
| 4-J | STAINLESS STEEL 303S31 / PASSIVATE |
| 46-J | STAINLESS STEEL 316 / PASSIVATE |

LIST NOT EXHAUSTIVE, SEE PLATING TABLE FOR OTHER OPTIONS

60H1-17-08-4-J-A-L35

- SERIES
- CONNECTOR INTERFACE
- ANGLE
- SHELL SIZE (TABLE 1)
- ENTRY SIZE (TABLE 2)
- MATERIAL (TABLE 3)
- FINISH (TABLE 3)
- RING OPTION
  - A - RING TO SUIT SINGLE BRAID
  - B - RING TO SUIT DOUBLE BRAID
  - OMIT IF NO RING IS REQUIRED
- LENGTH CODE IN mm (STRAIGHT ONLY)
  - OMIT FOR STANDARD 26,50mm

**For tooling and assembly instructions see www.polamco.com**

Backshell supplied with Ring if specified in the part number
Sealing and strain relief achieved with Heat Shrink Boot (see page 354)
Adhesive if required for assembly (see page 352)
Screenbraid for EMC/RFI screening (see page 350)

DRAWING NOT TO SCALE, DIMENSIONS IN MM

SEE PAGES 18-26 FOR COMPLETE LIST OF AVAILABLE MATERIALS, FINISHES AND CONNECTOR INTERFACES
(DIMENSIONS, FORM AND O RING SUBJECT TO CHANGE DEPENDING ON BACKSHELL MATERIAL AND CONNECTOR INTERFACE)



THIS DRAWING IS THE PROPERTY OF POLAMCO LTD AND MUST NOT BE USED FOR
COMMERCIAL PURPOSES WITHOUT WRITTEN CONSENT OF THE COMPANY

# 60 (NB) - Memory Ring Termination
# Nickel Aluminium Bronze

## Interface H - MIL-DTL-38999 SERIES III & IV

Polamco

**Interconnect Solutions Worldwide**

MEMORY RING

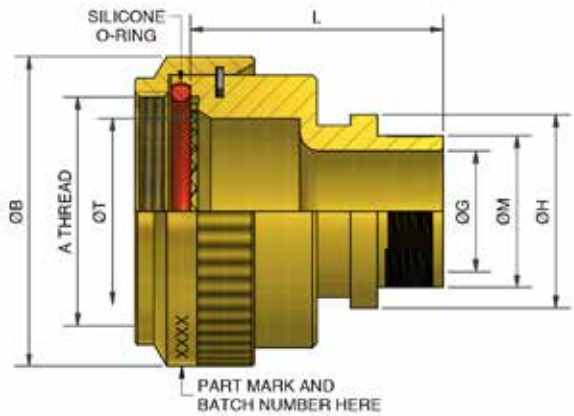


ANGLE 1

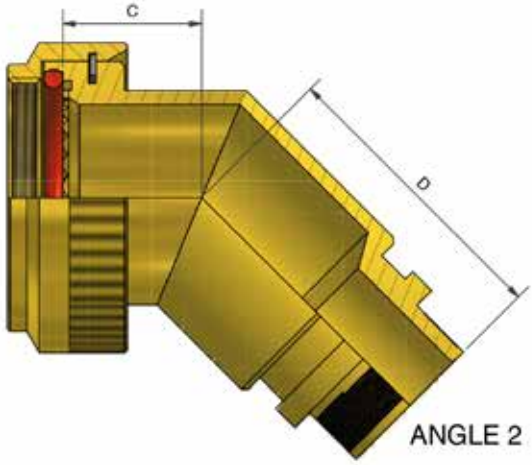


ANGLE 2

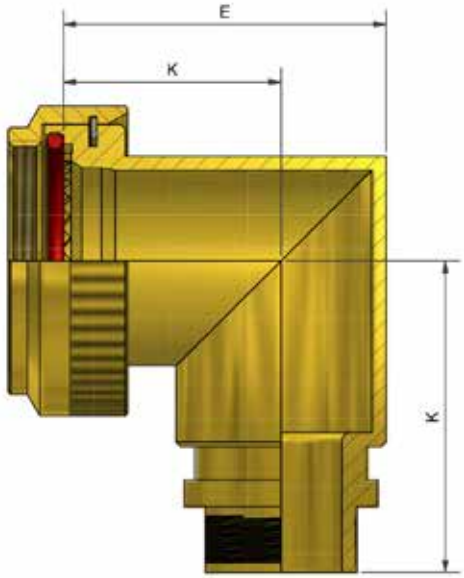


ANGLE 3

DRAWING NOT TO SCALE, DIMENSIONS IN MM

SEE PAGES 18-26 FOR COMPLETE LIST OF AVAILABLE MATERIALS, FINISHES AND CONNECTOR INTERFACES
(DIMENSIONS, FORM AND O RING SUBJECT TO CHANGE DEPENDING ON BACKSHELL MATERIAL AND CONNECTOR INTERFACE)



THIS DRAWING IS THE PROPERTY OF POLAMCO LTD AND MUST NOT BE USED FOR COMMERCIAL PURPOSES WITHOUT WRITTEN CONSENT OF THE COMPANY

# 60 (NB) - Memory Ring Termination Nickel Aluminium Bronze

## Interface H - MIL-DTL-38999 SERIES III & IV

Polamco

**Interconnect Solutions Worldwide**

TABLE 1

| SHELL SIZE | A THREAD | ØB MAX | ØT MIN | C MAX | D MAX | E MAX | F MAX | K ±0,5 |
|---|---|---|---|---|---|---|---|---|
| 09 | M12 x 1.0 | 18,0 | 6,7 | 13,1 | 26,8 | 21,4 | 26,4 | 16,3 |
| 11 | M15 x 1.0 | 21,0 | 10,2 | 13,9 | 27,6 | 24,5 | 28,2 | 17,2 |
| 13 | M18 x 1.0 | 24,5 | 13,5 | 14,5 | 28,0 | 28,5 | 29,7 | 19,4 |
| 15 | M22 x 1.0 | 29,0 | 16,2 | 15,5 | 29,0 | 31,3 | 31,2 | 21,0 |
| 17 | M25 x 1.0 | 32,5 | 19,4 | 16,1 | 29,8 | 34,4 | 32,9 | 22,8 |
| 19 | M28 x 1.0 | 35,5 | 21,8 | 16,8 | 30,6 | 38,7 | 34,5 | 25,3 |
| 21 | M31 x 1.0 | 37,0 | 25,1 | 17,1 | 30,9 | 40,9 | 36,1 | 26,1 |
| 23 | M34 x 1.0 | 40,0 | 28,2 | 17,7 | 31,2 | 43,9 | 37,6 | 27,6 |
| 25 | M37 x 1.0 | 43,5 | 31,4 | 18,4 | 32,1 | 46,6 | 39,1 | 29,1 |

TABLE 2

| ENTRY SIZE | ØG MIN | ØH MAX | ØM MAX |
|---|---|---|---|
| 04 | 6,3 | 14,3 | 9,5 |
| 05 | 7,9 | 15,8 | 11,1 |
| 06 | 9,5 | 17,4 | 12,7 |
| 07 | 11,1 | 19,0 | 14,3 |
| 08 | 12,7 | 20,6 | 15,9 |
| 10 | 15,8 | 23,8 | 19,0 |
| 12 | 19,0 | 27,0 | 22,2 |
| 14 | 22,2 | 30,1 | 25,4 |
| 16 | 25,4 | 33,3 | 28,6 |
| 18 | 28,5 | 36,5 | 31,8 |
| 20 | 31,7 | 39,7 | 34,9 |
| 22 | 34,9 | 42,8 | 38,1 |
| 24 | 38,1 | 46,0 | 41,3 |

60H1-17-08-2-Z-A-L35

SERIES
CONNECTOR INTERFACE
ANGLE
SHELL SIZE (TABLE 1)
ENTRY SIZE (TABLE 2)
MATERIAL
NICKEL ALUMINIUM BRONZE
FINISH
SHOT BLAST
RING OPTION
A - RING TO SUIT SINGLE BRAID
B - RING TO SUIT DOUBLE BRAID
OMIT IF NO RING IS REQUIRED
LENGTH CODE IN mm (STRAIGHT ONLY)
OMIT FOR STANDARD 26,50mm

**For tooling and assembly instructions see www.polamco.com**

Backshell supplied with Ring if specified in the part number
Sealing and strain relief achieved with Heat Shrink Boot (see page 354)
Adhesive if required for assembly (see page 352)
Screenbraid for EMC/RFI screening (see page 350)

DRAWING NOT TO SCALE, DIMENSIONS IN MM

SEE PAGES 18-26 FOR COMPLETE LIST OF AVAILABLE MATERIALS, FINISHES AND CONNECTOR INTERFACES
(DIMENSIONS, FORM AND O RING SUBJECT TO CHANGE DEPENDING ON BACKSHELL MATERIAL AND CONNECTOR INTERFACE)



THIS DRAWING IS THE PROPERTY OF POLAMCO LTD AND MUST NOT BE USED FOR
COMMERCIAL PURPOSES WITHOUT WRITTEN CONSENT OF THE COMPANY

# 60F (T6) - Memory Ring Termination
# Pre-Terminated Braid Tail

## Interface F - MIL-DTL-38999 SERIES I

Polamco

**Interconnect Solutions Worldwide**

MEMORY RING

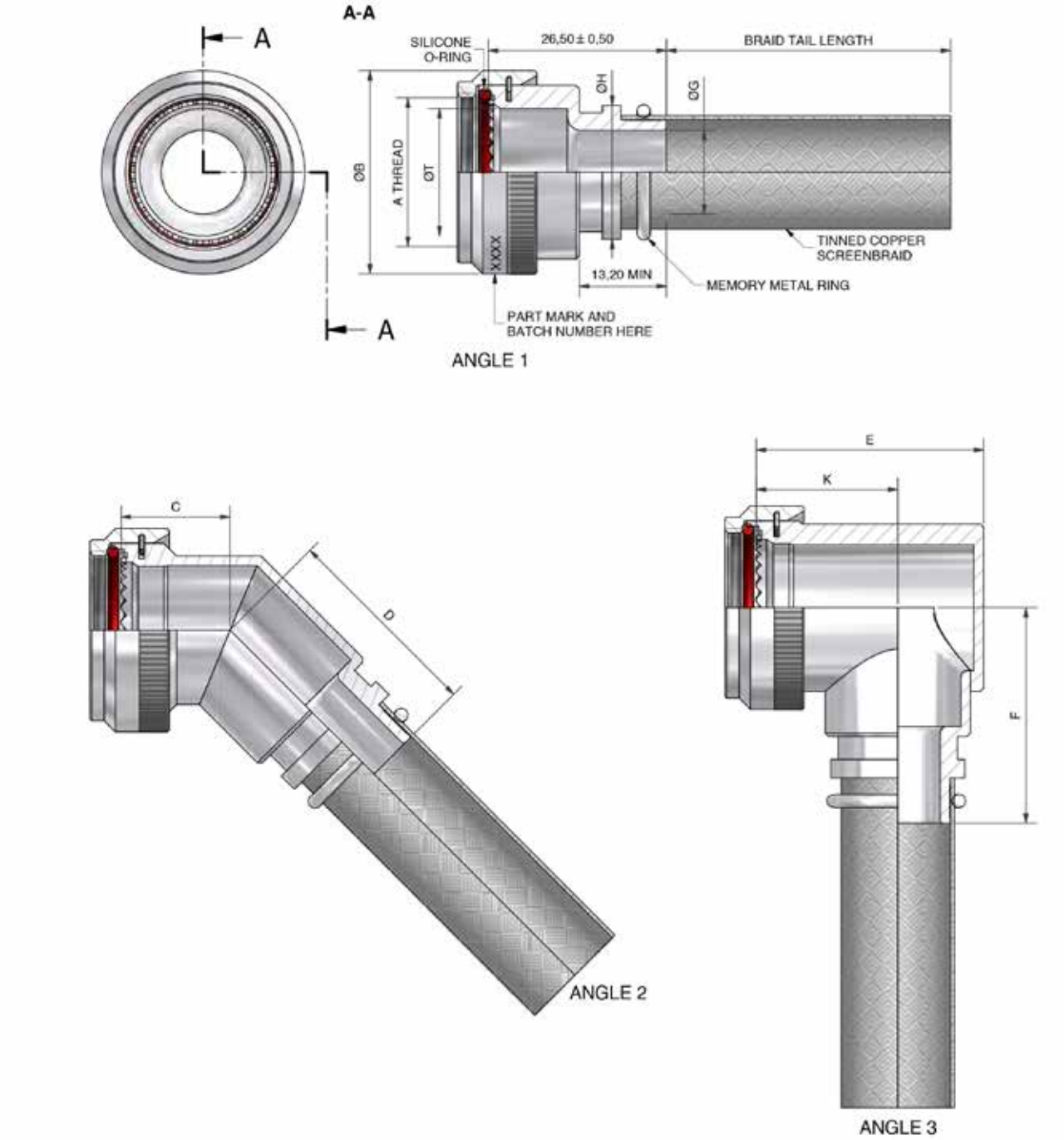


DRAWING NOT TO SCALE, DIMENSIONS IN MM

SEE PAGES 18-26 FOR COMPLETE LIST OF AVAILABLE MATERIALS, FINISHES AND CONNECTOR INTERFACES
(DIMENSIONS, FORM AND O RING SUBJECT TO CHANGE DEPENDING ON BACKSHELL MATERIAL AND CONNECTOR INTERFACE)



THIS DRAWING IS THE PROPERTY OF POLAMCO LTD AND MUST NOT BE USED FOR COMMERCIAL PURPOSES WITHOUT WRITTEN CONSENT OF THE COMPANY

# 60F (T6) - Memory Ring Termination Pre-Terminated Braid Tail

## Interface F - MIL-DTL-38999 SERIES I

Polamco

**Interconnect Solutions Worldwide**

MEMORY RING

TABLE 1

| SHELL SIZE | A THREAD | ØB MAX | ØT MIN | C ±0,5 | D MAX | E MAX | F MAX | K ±0,5 |
|---|---|---|---|---|---|---|---|---|
| 09 | 7/16-28UNEF | 18,0 | 6,8 | 16,4 | 26,8 | 22,7 | 26,5 | 15,0 |
| 11 | 9/16-24UNEF | 21,0 | 10,2 | 17,2 | 27,6 | 26,2 | 28,2 | 17,0 |
| 13 | 11/16-24UNEF | 24,5 | 13,1 | 17,6 | 28,0 | 29,2 | 29,7 | 18,0 |
| 15 | 13/16-20UNEF | 27,8 | 16,2 | 18,5 | 29,0 | 32,2 | 31,2 | 20,0 |
| 17 | 15/16-20UNEF | 30,8 | 19,3 | 19,2 | 29,8 | 35,7 | 32,9 | 21,5 |
| 19 | 1 1/16-18UNEF | 34,1 | 22,3 | 19,6 | 30,6 | 39,7 | 34,5 | 23,0 |
| 21 | 1 3/16-18UNEF | 37,3 | 25,8 | 20,4 | 30,9 | 42,2 | 36,1 | 25,0 |
| 23 | 1 5/16-18UNEF | 41,0 | 28,3 | 20,8 | 31,2 | 45,2 | 37,6 | 26,0 |
| 25 | 1 7/16-18UNEF | 43,7 | 31,5 | 21,7 | 32,1 | 48,2 | 39,1 | 28,0 |

TABLE 2

| ENTRY SIZE | ØG MIN | ØH MAX | ØM MAX |
|---|---|---|---|
| 04 | 6,3 | 14,3 | 9,5 |
| 05 | 7,9 | 15,8 | 11,1 |
| 06 | 9,5 | 17,4 | 12,7 |
| 07 | 11,1 | 19,0 | 14,3 |
| 08 | 12,7 | 20,6 | 15,9 |
| 10 | 15,8 | 23,8 | 19,0 |
| 12 | 19,0 | 27,0 | 22,2 |
| 14 | 22,2 | 30,1 | 25,4 |
| 16 | 25,4 | 33,3 | 28,6 |
| 18 | 28,5 | 36,5 | 31,8 |
| 20 | 31,7 | 39,7 | 34,9 |
| 22 | 34,9 | 42,8 | 38,1 |
| 24 | 38,1 | 46,0 | 41,3 |

TABLE 3

| CODE | FINISH |
|---|---|
| C | ELECTROLESS NICKEL |
| B | CADMIUM OLIVE DRAB OVER ELECTROLESS NICKEL |
| ZB | ZINC COBALT OLIVE DRAB OVER ELECTROLESS NICKEL |
| ZN | ZINC NICKEL BLACK PASSIVATE OVER ELECTROLESS NICKEL |

LIST NOT EXHAUSTIVE, SEE PLATING TABLE FOR OTHER OPTIONS

60F1-17-08-1-C-A-T6

- SERIES
- CONNECTOR INTERFACE
- ANGLE
- SHELL SIZE (TABLE 1)
- ENTRY SIZE (TABLE 2)
- MATERIAL
  - ALUMINIUM ALLOY
- FINSH (TABLE 3)
- BRAID TAIL OPTION
  - A-T - PRE-TERMINATED WITH TINNED COPPER SCREENBRAID
  - B-D - PRE-TERMINATED WITH DOUBLE LAYER TINNED COPPER SCREENBRAID
- BRAID TAIL LENGTH IN INCHES
  - OTHER OPTIONS (12 & 18)

**For tooling and assembly instructions see www.polamco.com**

Backshell supplied pre-terminated with memory ring and braid tail, which is attached to cable braid
Sealing and strain relief achieved with Heat Shrink Boot (see page 354)
Adhesive if required for assembly (see page 352)
Screenbraid for EMC/RFI screening (see page 350)

DRAWING NOT TO SCALE, DIMENSIONS IN MM

SEE PAGES 18-26 FOR COMPLETE LIST OF AVAILABLE MATERIALS, FINISHES AND CONNECTOR INTERFACES
(DIMENSIONS, FORM AND O RING SUBJECT TO CHANGE DEPENDING ON BACKSHELL MATERIAL AND CONNECTOR INTERFACE)

THIS DRAWING IS THE PROPERTY OF POLAMCO LTD AND MUST NOT BE USED FOR COMMERCIAL PURPOSES WITHOUT WRITTEN CONSENT OF THE COMPANY

# 60F (T6) - Memory Ring Termination
# Pre-Terminated Braid Tail

## Interface F - MIL-DTL-38999 SERIES II

Polamco

**Interconnect Solutions Worldwide**

MEMORY RING

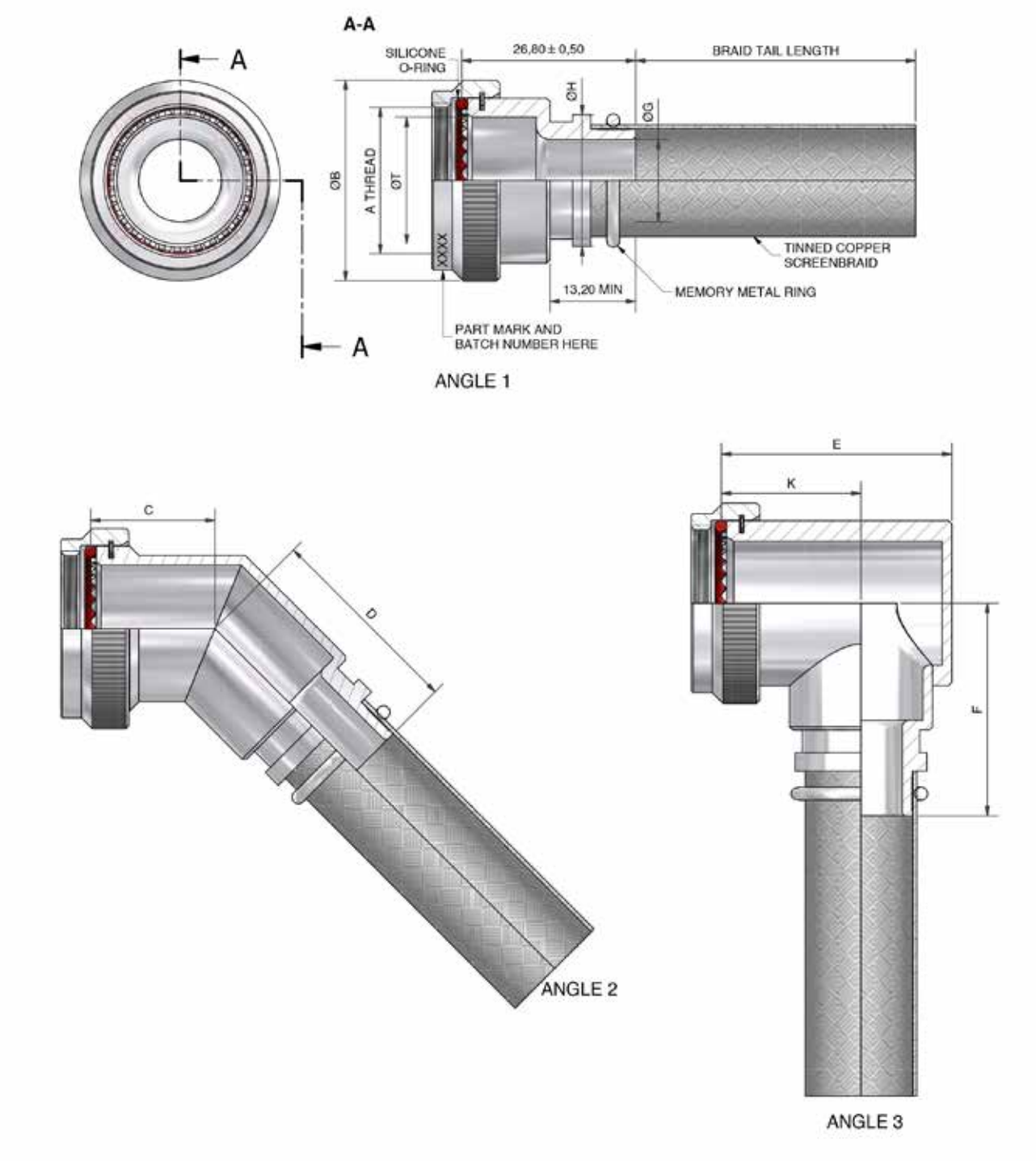


DRAWING NOT TO SCALE, DIMENSIONS IN MM

SEE PAGES 18-26 FOR COMPLETE LIST OF AVAILABLE MATERIALS, FINISHES AND CONNECTOR INTERFACES
(DIMENSIONS, FORM AND O RING SUBJECT TO CHANGE DEPENDING ON BACKSHELL MATERIAL AND CONNECTOR INTERFACE)



THIS DRAWING IS THE PROPERTY OF POLAMCO LTD AND MUST NOT BE USED FOR COMMERCIAL PURPOSES WITHOUT WRITTEN CONSENT OF THE COMPANY

# 60F (T6) - Memory Ring Termination Pre-Terminated Braid Tail

## Interface F - MIL-DTL-38999 SERIES II

Polamco

**Interconnect Solutions Worldwide**

TABLE 1

| SHELL SIZE | A THREAD | ØB MAX | ØT MIN | C ±0,5 | D MAX | E MAX | F MAX | K ±0,5 |
|---|---|---|---|---|---|---|---|---|
| 08 | 7/16-28UNEF | 18,3 | 6,6 | 16,4 | 20,6 | 22,7 | 26,5 | 15,0 |
| 10 | 9/16-24UNEF | 21,5 | 10,1 | 17,2 | 21,4 | 26,2 | 28,2 | 17,0 |
| 12 | 11/16-24UNEF | 24,5 | 12,9 | 17,6 | 22,3 | 29,2 | 29,7 | 18,0 |
| 14 | 13/16-20UNEF | 27,8 | 16,1 | 18,5 | 22,7 | 32,2 | 31,2 | 20,0 |
| 16 | 15/16-20UNEF | 30,8 | 19,3 | 19,2 | 23,5 | 35,7 | 32,9 | 21,5 |
| 18 | 1 1/16-18UNEF | 34,1 | 21,7 | 19,6 | 23,8 | 39,7 | 34,5 | 23,0 |
| 20 | 1 3/16-18UNEF | 37,3 | 24,9 | 20,4 | 24,6 | 42,2 | 36,1 | 25,0 |
| 22 | 1 5/16-18UNEF | 40,5 | 28,1 | 20,8 | 25,5 | 45,2 | 37,6 | 26,0 |
| 24 | 1 7/16-18UNEF | 43,7 | 31,3 | 21,7 | 25,9 | 48,2 | 39,1 | 28,0 |

TABLE 2

| ENTRY SIZE | ØG MIN | ØH MAX | ØM MAX |
|---|---|---|---|
| 04 | 6,3 | 14,3 | 9,5 |
| 05 | 7,9 | 15,8 | 11,1 |
| 06 | 9,5 | 17,4 | 12,7 |
| 07 | 11,1 | 19,0 | 14,3 |
| 08 | 12,7 | 20,6 | 15,9 |
| 10 | 15,8 | 23,8 | 19,0 |
| 12 | 19,0 | 27,0 | 22,2 |
| 14 | 22,2 | 30,1 | 25,4 |
| 16 | 25,4 | 33,3 | 28,6 |
| 18 | 28,5 | 36,5 | 31,8 |
| 20 | 31,7 | 39,7 | 34,9 |
| 22 | 34,9 | 42,8 | 38,1 |
| 24 | 38,1 | 46,0 | 41,3 |

TABLE 3

| CODE | FINISH |
|---|---|
| C | ELECTROLESS NICKEL |
| B | CADMIUM OLIVE DRAB OVER ELECTROLESS NICKEL |
| ZB | ZINC COBALT OLIVE DRAB OVER ELECTROLESS NICKEL |
| ZN | ZINC NICKEL BLACK PASSIVATE OVER ELECTROLESS NICKEL |

LIST NOT EXHAUSTIVE, SEE PLATING TABLE FOR OTHER OPTIONS

60F1-16-08-1-C-A-T6

SERIES
CONNECTOR INTERFACE
ANGLE
SHELL SIZE (TABLE 1)
ENTRY SIZE (TABLE 2)
MATERIAL
ALUMINIUM ALLOY
FINSH (TABLE 3)
BRAID TAIL OPTION
A-T - PRE-TERMINATED WITH TINNED COPPER SCREENBRAID
B-D - PRE-TERMINATED WITH DOUBLE LAYER TINNED COPPER SCREENBRAID
BRAID TAIL LENGTH IN INCHES
OTHER OPTIONS (12 & 18)

**For tooling and assembly instructions see www.polamco.com**

Backshell supplied pre-terminated with memory ring and braid tail, which is attached to cable braid
Sealing and strain relief achieved with Heat Shrink Boot (see page 354)
Adhesive if required for assembly (see page 352)
Screenbraid for EMC/RFI screening (see page 350)

DRAWING NOT TO SCALE, DIMENSIONS IN MM

SEE PAGES 18-26 FOR COMPLETE LIST OF AVAILABLE MATERIALS, FINISHES AND CONNECTOR INTERFACES
(DIMENSIONS, FORM AND O RING SUBJECT TO CHANGE DEPENDING ON BACKSHELL MATERIAL AND CONNECTOR INTERFACE)

THIS DRAWING IS THE PROPERTY OF POLAMCO LTD AND MUST NOT BE USED FOR COMMERCIAL PURPOSES WITHOUT WRITTEN CONSENT OF THE COMPANY

# 60H (T6) - Memory Ring Termination
# Pre-Terminated Braid Tail

## Interface H - MIL-DTL-38999 SERIES III & IV

Polamco

**Interconnect Solutions Worldwide**

MEMORY RING

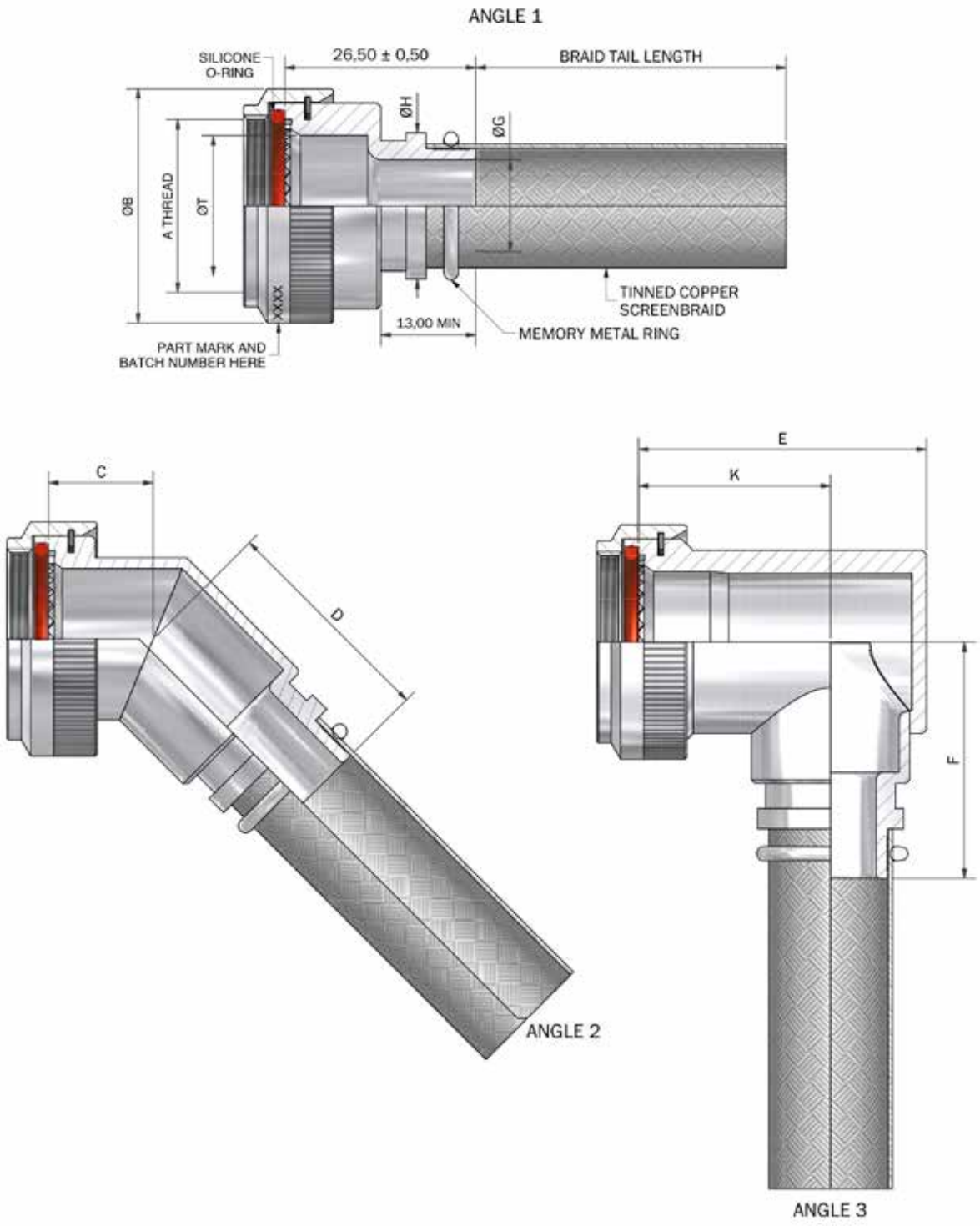


DRAWING NOT TO SCALE, DIMENSIONS IN MM

SEE PAGES 18-26 FOR COMPLETE LIST OF AVAILABLE MATERIALS, FINISHES AND CONNECTOR INTERFACES
(DIMENSIONS, FORM AND O RING SUBJECT TO CHANGE DEPENDING ON BACKSHELL MATERIAL AND CONNECTOR INTERFACE)



THIS DRAWING IS THE PROPERTY OF POLAMCO LTD AND MUST NOT BE USED FOR COMMERCIAL PURPOSES WITHOUT WRITTEN CONSENT OF THE COMPANY

# 60H (T6) - Memory Ring Termination
# Pre-Terminated Braid Tail

## Interface H - MIL-DTL-38999 SERIES III & IV

Polamco

**Interconnect Solutions Worldwide**

TABLE 1

| SHELL SIZE | A THREAD | ØB MAX | ØT MIN | C MAX | D MAX | E MAX | F MAX | K ±0,5 | J MAX | F' MAX | MAX ENTRY FOR LOW PROFILE OPTION |
|---|---|---|---|---|---|---|---|---|---|---|---|
| 09 | M12 x 1.0 | 18,0 | 6,7 | 13,1 | 26,8 | 25,7 | 26,4 | 17,5 | 18,0 | 27,4 | 04 |
| 11 | M15 x 1.0 | 21,0 | 10,2 | 13,9 | 27,6 | 26,7 | 28,2 | 17,5 | 22,0 | 29,2 | 05 |
| 13 | M18 x 1.0 | 24,5 | 13,5 | 14,5 | 28,0 | 31,2 | 29,7 | 20,0 | 22,0 | 30,7 | 06 |
| 15 | M22 x 1.0 | 29,0 | 16,2 | 15,5 | 29,0 | 37,2 | 31,2 | 24,5 | 25,0 | 32,2 | 07 |
| 17 | M25 x 1.0 | 32,5 | 19,4 | 16,1 | 29,8 | 40,2 | 32,9 | 26,7 | 27,0 | 33,9 | 08 |
| 19 | M28 x 1.0 | 35,5 | 21,8 | 16,8 | 30,6 | 44,7 | 34,5 | 27,0 | 28,0 | 35,7 | 10 |
| 21 | M31 x 1.0 | 37,0 | 25,1 | 17,1 | 30,9 | 49,2 | 36,1 | 30,5 | 29,0 | 37,1 | 10 |
| 23 | M34 x 1.0 | 40,0 | 28,2 | 17,7 | 31,2 | 51,7 | 37,6 | 31,5 | 31,7 | 38,6 | 10 |
| 25 | M37 x 1.0 | 43,5 | 31,4 | 18,4 | 32,1 | 53,2 | 39,1 | 28,5 | 31,7 | 40,1 | 10 |

TABLE 2

| ENTRY SIZE | ØG MIN | ØH MAX |
|---|---|---|
| 04 | 6,3 | 14,3 |
| 05 | 7,9 | 15,8 |
| 06 | 9,5 | 17,4 |
| 07 | 11,1 | 19,0 |
| 08 | 12,7 | 20,6 |
| 10 | 15,8 | 23,8 |
| 12 | 19,0 | 27,0 |
| 14 | 22,2 | 30,1 |
| 16 | 25,4 | 33,3 |
| 18 | 28,5 | 36,5 |
| 20 | 31,7 | 39,7 |
| 22 | 34,9 | 42,8 |
| 24 | 38,1 | 46,0 |

TABLE 3

| CODE | FINISH |
|---|---|
| C | ELECTROLESS NICKEL |
| B | CADMIUM OLIVE DRAB OVER ELECTROLESS NICKEL |
| ZB | ZINC COBALT OLIVE DRAB OVER ELECTROLESS NICKEL |
| ZN | ZINC NICKEL BLACK PASSIVATE OVER ELECTROLESS NICKEL |

LIST NOT EXHAUSTIVE, SEE PLATING TABLE FOR OTHER OPTIONS

60H1-17-08-1-C-A-T6

SERIES
CONNECTOR INTERFACE
ANGLE
SHELL SIZE (TABLE 1)
ENTRY SIZE (TABLE 2)
MATERIAL
ALUMINIUM ALLOY
FINISH (TABLE 3)
BRAID TAIL OPTION
A-T - PRE-TERMINATED WITH TINNED COPPER SCREENBRAID
B-D - PRE-TERMINATED WITH DOUBLE LAYER TINNED COPPER SCREENBRAID
BRAID TAIL LENGTH (IN INCHES)

**For tooling and assembly instructions see www.polamco.com**

Backshell supplied pre-terminated with memory ring and braid tail, which is attached to cable braid
Sealing and strain relief achieved with Heat Shrink Boot (see page 354)
Adhesive if required for assembly (see page 352)
Screenbraid for EMC/RFI screening (see page 350)

DRAWING NOT TO SCALE, DIMENSIONS IN MM

SEE PAGES 18-26 FOR COMPLETE LIST OF AVAILABLE MATERIALS, FINISHES AND CONNECTOR INTERFACES
(DIMENSIONS, FORM AND O RING SUBJECT TO CHANGE DEPENDING ON BACKSHELL MATERIAL AND CONNECTOR INTERFACE)

THIS DRAWING IS THE PROPERTY OF POLAMCO LTD AND MUST NOT BE USED FOR COMMERCIAL PURPOSES WITHOUT WRITTEN CONSENT OF THE COMPANY

# 60H3C - Memory Ring Termination Cobra Head

## Interface H - MIL-DTL-38999 SERIES III & IV

Polamco

**Interconnect Solutions Worldwide**

MEMORY RING

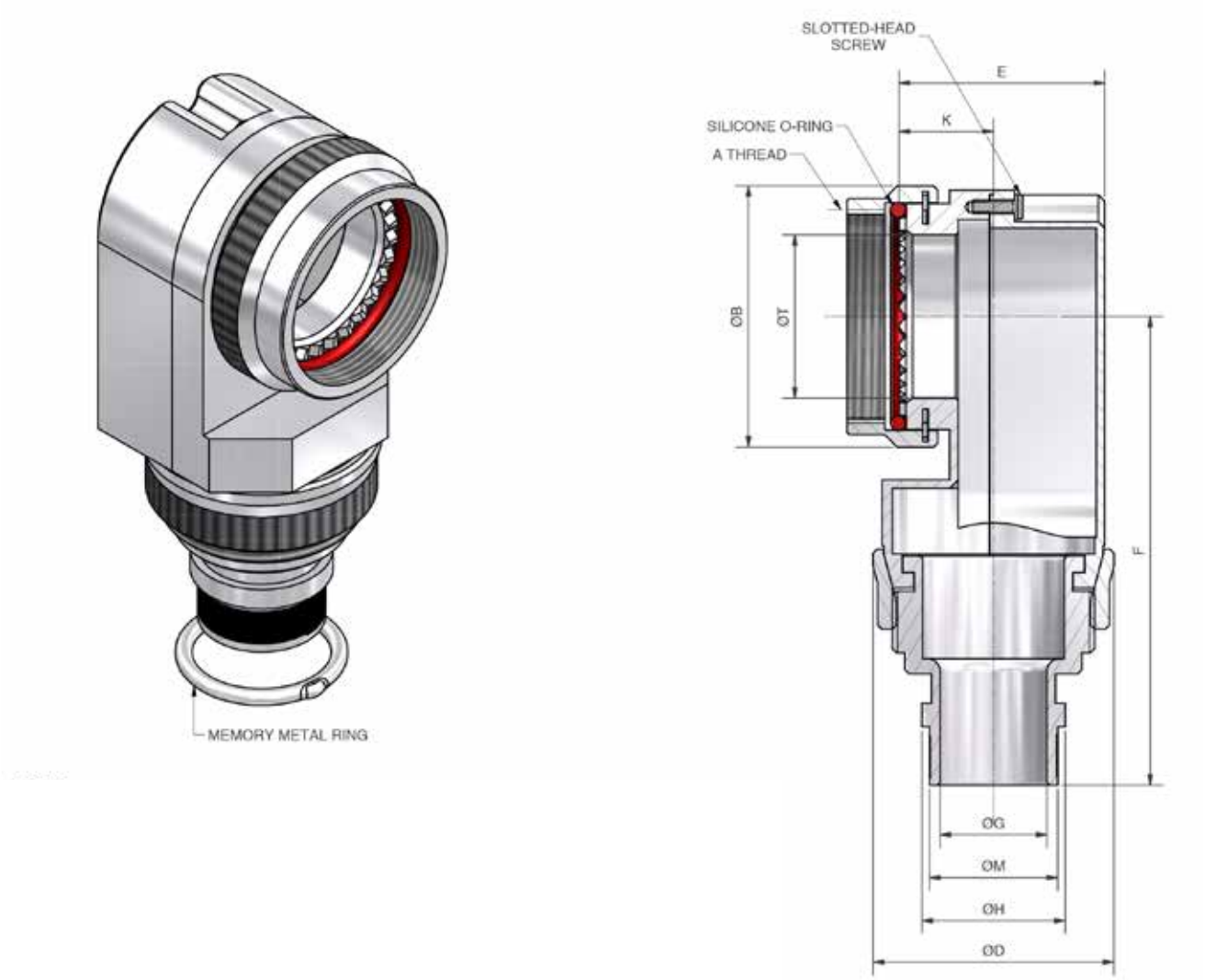


DRAWING NOT TO SCALE, DIMENSIONS IN MM

SEE PAGES 18-26 FOR COMPLETE LIST OF AVAILABLE MATERIALS, FINISHES AND CONNECTOR INTERFACES
(DIMENSIONS, FORM AND O RING SUBJECT TO CHANGE DEPENDING ON BACKSHELL MATERIAL AND CONNECTOR INTERFACE)



THIS DRAWING IS THE PROPERTY OF POLAMCO LTD AND MUST NOT BE USED FOR COMMERCIAL PURPOSES WITHOUT WRITTEN CONSENT OF THE COMPANY

# 60H3C - Memory Ring Termination Cobra Head

## Interface H - MIL-DTL-38999 SERIES III & IV

Polamco

**Interconnect Solutions Worldwide**



TABLE 1

| SHELL SIZE | A THREAD | ØB MAX | T MIN | ØD MAX | E MAX | F MAX | K +/-0,5 | MAX ENTRY |
|---|---|---|---|---|---|---|---|---|
| 09 | M12 x 1.0 | 18,0 | 6,7 | 18,7 | 17,7 | 45,8 | 8,7 | 04 |
| 11 | M15 x 1.0 | 21,0 | 10,2 | 21,7 | 19,0 | 49,9 | 8,7 | 06 |
| 13 | M18 x 1.0 | 24,5 | 13,5 | 24,7 | 22,1 | 49,9 | 8,7 | 08 |
| 15 | M22 x 1.0 | 27,5 | 16,2 | 24,7 | 22,1 | 53,7 | 10,2 | 08 |
| 17 | M25 x 1.0 | 31,0 | 19,4 | 28,7 | 25,1 | 56,0 | 11,2 | 10 |
| 19 | M28 x 1.0 | 34,0 | 21,8 | 28,7 | 25,1 | 58,7 | 11,2 | 10 |
| 21 | M31 x 1.0 | 37,0 | 25,1 | 28,7 | 25,1 | 59,7 | 11,2 | 10 |
| 23 | M34 x 1.0 | 40,0 | 28,2 | 31,7 | 28,1 | 62,2 | 12,7 | 12 |
| 25 | M37 x 1.0 | 43,5 | 31,4 | 31,7 | 28,1 | 63,7 | 12,7 | 12 |

TABLE 2

| ENTRY SIZE | ØG MIN | ØM MAX | ØH MAX |
|---|---|---|---|
| 04 | 6,4 | 9,5 | 14,3 |
| 05 | 7,9 | 11,1 | 15,8 |
| 06 | 9,5 | 12,7 | 17,4 |
| 07 | 11,1 | 14,3 | 19,0 |
| 08 | 12,7 | 15,9 | 20,6 |
| 10 | 15,9 | 19,1 | 23,8 |
| 12 | 19,1 | 22,2 | 27,0 |

TABLE 3

| CODE | MATERIAL / PLATING |
|---|---|
| 1-C | ALUMINIUM / ELECTROLESS NICKEL |
| 1-B | ALUMINIUM / CADMIUM OLIVE DRAB OVER ELECTROLESS NICKEL |
| 1-ZB | ALUMINIUM / ZINC COBALT OLIVE DRAB OVER ELECTROLESS NICKEL |
| 4-J | STAINLESS STEEL / PASSIVATE |
| 2-Z | NICKEL ALUMINIUM BRONZE / SHOT BLAST NON REFLECTIVE |

LIST NOT EXHAUSTIVE, SEE PLATING TABLE FOR OTHER OPTIONS

60H3C-17-08-1-C-A

- SERIES
- CONNECTOR INTERFACE
- ANGLE (3 - 90°)
- COBRA HEAD STYLE
- SHELL SIZE (TABLE 1)
- ENTRY SIZE (TABLE 2)
- MATERIAL (TABLE 3)
- PLATING (TABLE 3)
- RING OPTION
  - A - RING TO SUIT SINGLE BRAID
  - B - RING TO SUIT DOUBLE BRAID
  - OMIT IF NO RING IS REQUIRED

**For tooling and assembly instructions see www.polamco.com**

Backshell supplied with Ring if specified in the part number
Sealing and strain relief achieved with Heat Shrink Boot (see page 354)
Adhesive if required for assembly (see page 352)
Screenbraid for EMC/RFI screening (see page 350)

DRAWING NOT TO SCALE, DIMENSIONS IN MM

SEE PAGES 18-26 FOR COMPLETE LIST OF AVAILABLE MATERIALS, FINISHES AND CONNECTOR INTERFACES
(DIMENSIONS, FORM AND O RING SUBJECT TO CHANGE DEPENDING ON BACKSHELL MATERIAL AND CONNECTOR INTERFACE)

THIS DRAWING IS THE PROPERTY OF POLAMCO LTD AND MUST NOT BE USED FOR COMMERCIAL PURPOSES WITHOUT WRITTEN CONSENT OF THE COMPANY

# 95F - Braid Trap Termination

## Interface F - MIL-DTL-38999 SERIES I

Polamco

**Interconnect Solutions Worldwide**

BRAID TRAP

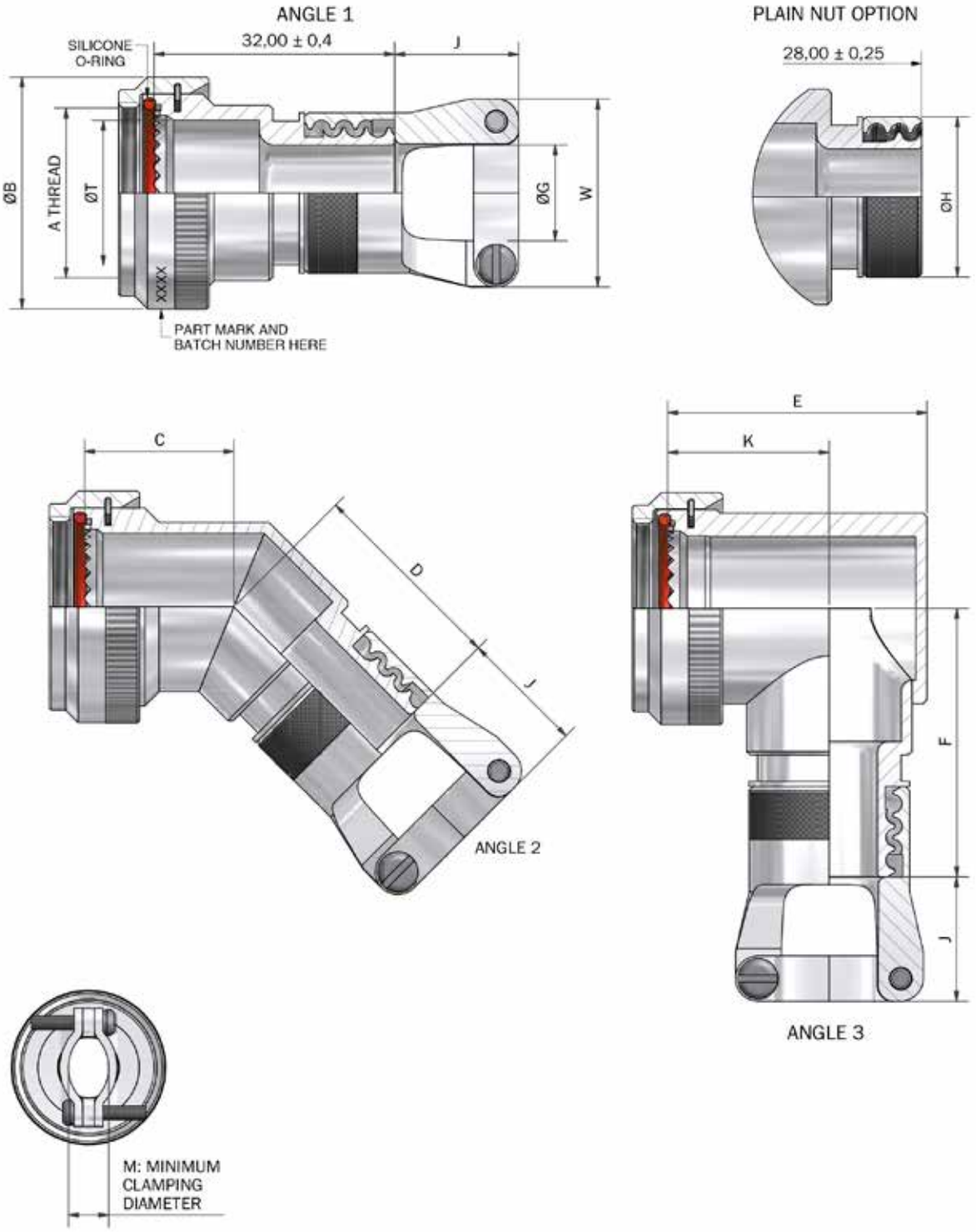


DRAWING NOT TO SCALE, DIMENSIONS IN MM

SEE PAGES 18-26 FOR COMPLETE LIST OF AVAILABLE MATERIALS, FINISHES AND CONNECTOR INTERFACES
(DIMENSIONS, FORM AND O RING SUBJECT TO CHANGE DEPENDING ON BACKSHELL MATERIAL AND CONNECTOR INTERFACE)



THIS DRAWING IS THE PROPERTY OF POLAMCO LTD AND MUST NOT BE USED FOR COMMERCIAL PURPOSES WITHOUT WRITTEN CONSENT OF THE COMPANY

# 95F - Braid Trap Termination

## Interface F - MIL-DTL-38999 SERIES I

Polamco

**Interconnect Solutions Worldwide**

TABLE 1

| SHELL SIZE | A THREAD | ØB MAX | ØT MIN | C ±0,5 | D MAX | D PLAIN NUT | E MAX | F MAX | F PLAIN NUT | K ±0,5 |
|---|---|---|---|---|---|---|---|---|---|---|
| 09 | 7/16-28 UNEF | 18,0 | 6,8 | 16,4 | 23,9 | 19,9 | 22,7 | 30,5 | 26,5 | 15,0 |
| 11 | 9/16-24 UNEF | 21,0 | 10,2 | 17,2 | 24,6 | 20,6 | 26,2 | 32,2 | 28,2 | 17,0 |
| 13 | 11/16-24 UNEF | 24,5 | 13,1 | 17,6 | 25,0 | 21,0 | 29,2 | 33,7 | 32,7 | 18,0 |
| 15 | 13/16-20 UNEF | 27,8 | 16,2 | 18,5 | 25,9 | 21,9 | 32,2 | 35,2 | 31,2 | 20,0 |
| 17 | 15/16-20 UNEF | 30,8 | 19,3 | 19,2 | 26,7 | 22,7 | 35,7 | 36,9 | 32,9 | 21,5 |
| 19 | 1 1/16-18 UNEF | 34,1 | 22,3 | 19,6 | 27,0 | 23,0 | 39,7 | 38,5 | 34,6 | 23,0 |
| 21 | 1 3/16-18 UNEF | 37,3 | 25,8 | 20,4 | 27,9 | 23,9 | 42,2 | 40,1 | 36,2 | 25,0 |
| 23 | 1 5/16-18 UNEF | 41,0 | 28,3 | 20,8 | 28,3 | 24,3 | 45,2 | 41,6 | 37,6 | 26,0 |
| 25 | 1 7/16-18 UNEF | 43,7 | 31,5 | 21,7 | 29,1 | 25,1 | 48,2 | 43,1 | 39,1 | 28,0 |

TABLE 2

| ENTRY SIZE | ØG MIN | W MAX | ØH MAX | J MAX | M +/- 0,5 |
|---|---|---|---|---|---|
| 03 | 4,7 | 17,3 | 15,2 | 12,7 | 5,8 |
| 04 | 6,3 | 18,9 | 15,2 | 12,7 | 5,7 |
| 05 | 7,9 | 20,5 | 16,8 | 12,7 | 6,8 |
| 06 | 9,5 | 22,1 | 18,4 | 12,7 | 6,9 |
| 07 | 11,1 | 23,6 | 20,0 | 12,7 | 8,1 |
| 08 | 12,7 | 25,1 | 21,6 | 15,7 | 8,5 |
| 09 | 14,2 | 26,8 | 23,2 | 15,7 | 9,7 |
| 10 | 15,8 | 28,4 | 24,8 | 15,7 | 10,4 |
| 11 | 17,4 | 30,1 | 26,4 | 18,7 | 11,5 |
| 12 | 19,0 | 31,6 | 27,9 | 18,7 | 11,4 |
| 13 | 20,6 | 33,1 | 29,5 | 18,7 | 14,0 |
| 14 | 22,2 | 34,8 | 31,1 | 21,7 | 15,4 |
| 15 | 23,8 | 36,5 | 32,7 | 21,7 | 16,8 |
| 16 | 25,4 | 37,9 | 34,3 | 21,7 | 17,3 |
| 17 | 27,0 | 39,5 | 35,9 | 21,7 | 18,8 |
| 18 | 28,6 | 41,1 | 37,5 | 21,7 | 19,5 |
| 19 | 30,2 | 42,7 | 39,3 | 23,2 | 25,9 |
| 20 | 31,8 | 44,3 | 40,6 | 23,2 | 23,4 |
| 21 | 33,3 | 45,8 | 42,2 | 23,2 | 24,8 |
| 22 | 35,0 | N/A | 43,8 | N/A | N/A |
| 23 | 36,5 | 47,4 | 45,4 | 23,2 | 25,4 |
| 24 | 38,1 | 50,9 | 47,0 | 23,2 | 27,4 |

TABLE 3

| CODE | FINISH |
|---|---|
| C | ELECTROLESS NICKEL |
| B | CADMIUM OLIVE DRAB OVER ELECTROLESS NICKEL |
| ZB | ZINC COBALT OLIVE DRAB OVER ELECTROLESS NICKEL |
| ZN | ZINC NICKEL BLACK PASSIVATE OVER ELECTROLESS NICKEL |

LIST NOT EXHAUSTIVE, SEE PLATING TABLE FOR OTHER OPTIONS

95F1-17-08-1-C-CC

- SERIES
- CONNECTOR INTERFACE
- ANGLE
- SHELL SIZE (TABLE 1)
- ENTRY SIZE (TABLE 2)
- MATERIAL
  - ALUMINIUM ALLOY
- FINISH (TABLE 3)
- CABLE CLAMP OPTION
  - OMIT FOR PLAIN NUT

**For tooling and assembly instructions see www.polamco.com**

Sealing and strain relief achieved with Heat Shrink Boot (see page 354)
Adhesive if required for assembly (see page 352)
Screenbraid for EMC/RFI screening (see page 350)

DRAWING NOT TO SCALE, DIMENSIONS IN MM

SEE PAGES 18-26 FOR COMPLETE LIST OF AVAILABLE MATERIALS, FINISHES AND CONNECTOR INTERFACES
(DIMENSIONS, FORM AND O RING SUBJECT TO CHANGE DEPENDING ON BACKSHELL MATERIAL AND CONNECTOR INTERFACE)

THIS DRAWING IS THE PROPERTY OF POLAMCO LTD AND MUST NOT BE USED FOR
COMMERCIAL PURPOSES WITHOUT WRITTEN CONSENT OF THE COMPANY

# 95F - Braid Trap Termination

## Interface F - MIL-DTL-38999 SERIES II

Polamco

**Interconnect Solutions Worldwide**



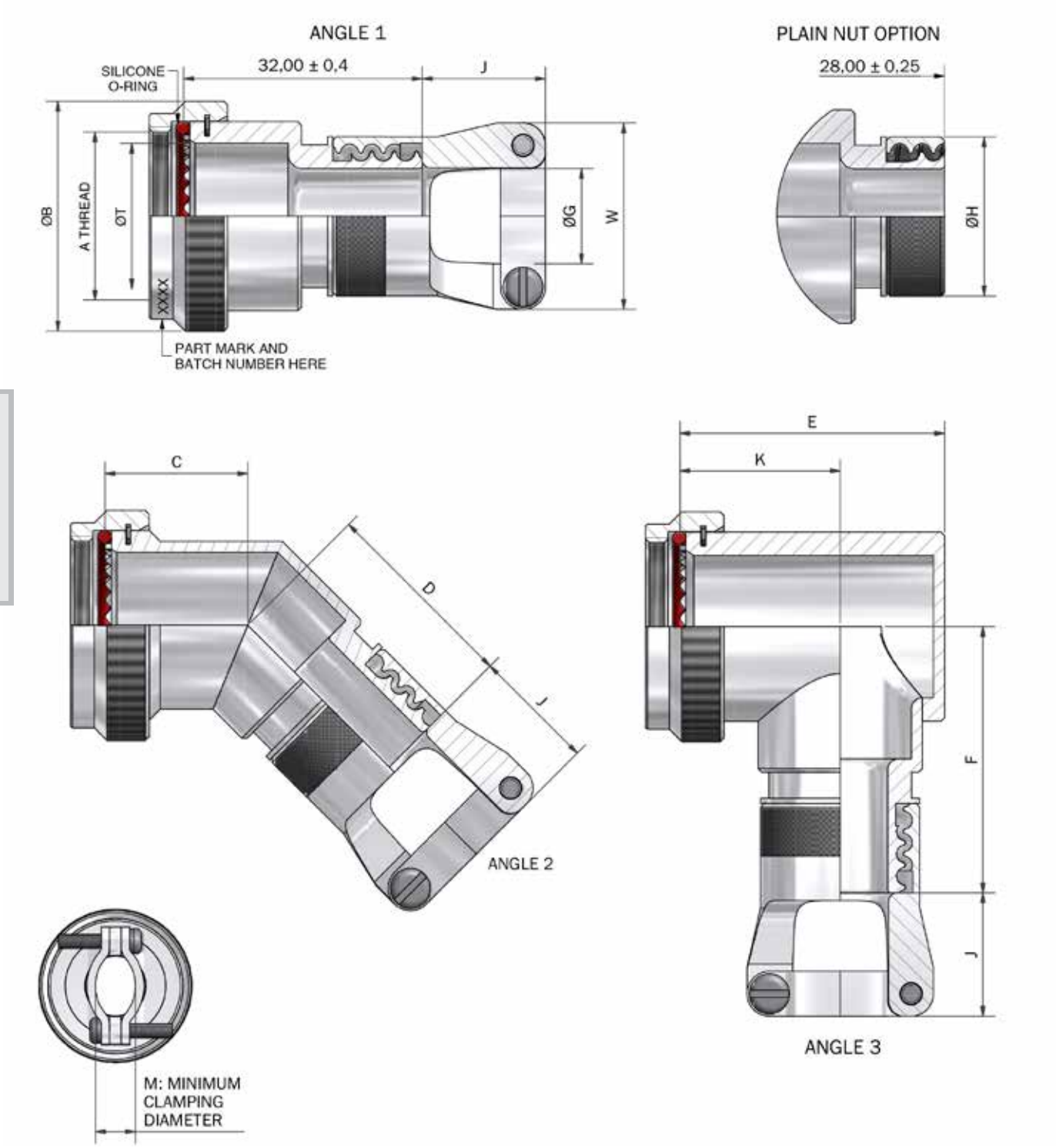


DRAWING NOT TO SCALE, DIMENSIONS IN MM

SEE PAGES 18-26 FOR COMPLETE LIST OF AVAILABLE MATERIALS, FINISHES AND CONNECTOR INTERFACES
(DIMENSIONS, FORM AND O RING SUBJECT TO CHANGE DEPENDING ON BACKSHELL MATERIAL AND CONNECTOR INTERFACE)



THIS DRAWING IS THE PROPERTY OF POLAMCO LTD AND MUST NOT BE USED FOR COMMERCIAL PURPOSES WITHOUT WRITTEN CONSENT OF THE COMPANY

# 95F - Braid Trap Termination

## Interface F - MIL-DTL-38999 SERIES II

Polamco

**Interconnect Solutions Worldwide**

TABLE 1

| SHELL SIZE | A THREAD | ØB MAX | ØT MIN | C ±0,5 | D MAX | D PLAIN NUT | E MAX | F MAX | F PLAIN NUT | K ±0,5 |
|---|---|---|---|---|---|---|---|---|---|---|
| 08 | 7/16-28 UNEF | 18,3 | 6,6 | 16,4 | 23,9 | 19,9 | 22,7 | 30,5 | 26,5 | 15,0 |
| 10 | 9/16-24 UNEF | 21,5 | 10,1 | 17,2 | 24,6 | 20,6 | 26,2 | 32,2 | 28,2 | 17,0 |
| 12 | 11/16-24 UNEF | 24,5 | 12,9 | 17,6 | 25,0 | 21,0 | 29,2 | 33,7 | 32,7 | 18,0 |
| 14 | 13/16-20 UNEF | 27,8 | 16,1 | 18,5 | 25,9 | 21,9 | 32,2 | 35,2 | 31,2 | 20,0 |
| 16 | 15/16-20 UNEF | 30,8 | 19,3 | 19,2 | 26,7 | 22,7 | 35,7 | 36,9 | 32,9 | 21,5 |
| 18 | 1 1/16-18 UNEF | 34,1 | 21,7 | 19,6 | 27,0 | 23,0 | 39,7 | 38,5 | 34,6 | 23,0 |
| 20 | 1 3/16-18 UNEF | 37,3 | 24,9 | 20,4 | 27,9 | 23,9 | 42,2 | 40,1 | 36,2 | 25,0 |
| 22 | 1 5/16-18 UNEF | 40,5 | 28,1 | 20,8 | 28,3 | 24,3 | 45,2 | 41,6 | 37,6 | 26,0 |
| 24 | 1 7/16-18 UNEF | 43,7 | 31,3 | 21,7 | 29,1 | 25,1 | 48,2 | 43,1 | 39,1 | 28,0 |

TABLE 2

| ENTRY SIZE | ØG MIN | W MAX | ØH MAX | J MAX | M ±0,5 |
|---|---|---|---|---|---|
| 03 | 4,7 | 17,3 | 15,2 | 12,7 | 5,8 |
| 04 | 6,3 | 18,9 | 15,2 | 12,7 | 5,7 |
| 05 | 7,9 | 20,5 | 16,8 | 12,7 | 6,8 |
| 06 | 9,5 | 22,1 | 18,4 | 12,7 | 6,9 |
| 07 | 11,1 | 23,6 | 20,0 | 12,7 | 8,1 |
| 08 | 12,7 | 25,1 | 21,6 | 15,7 | 8,5 |
| 09 | 14,2 | 26,8 | 23,2 | 15,7 | 9,7 |
| 10 | 15,8 | 28,4 | 24,8 | 15,7 | 10,4 |
| 11 | 17,4 | 30,1 | 26,4 | 18,7 | 11,5 |
| 12 | 19,0 | 31,6 | 27,9 | 18,7 | 11,4 |
| 13 | 20,6 | 33,1 | 29,5 | 18,7 | 14,0 |
| 14 | 22,2 | 34,8 | 31,1 | 21,7 | 15,4 |
| 15 | 23,8 | 36,5 | 32,7 | 21,7 | 16,8 |
| 16 | 25,4 | 37,9 | 34,3 | 21,7 | 17,3 |
| 17 | 27,0 | 39,5 | 35,9 | 21,7 | 18,8 |
| 18 | 28,6 | 41,1 | 37,5 | 21,7 | 19,5 |
| 19 | 30,2 | 42,7 | 39,3 | 23,2 | 25,9 |
| 20 | 31,8 | 44,3 | 40,6 | 23,2 | 23,4 |
| 21 | 33,3 | 45,8 | 42,2 | 23,2 | 24,8 |
| 22 | 35,0 | N/A | 43,8 | N/A | N/A |
| 23 | 36,5 | 47,4 | 45,4 | 23,2 | 25,4 |
| 24 | 38,1 | 50,9 | 47,0 | 23,2 | 27,4 |

TABLE 3

| CODE | FINISH |
|---|---|
| C | ELECTROLESS NICKEL |
| B | CADMIUM OLIVE DRAB OVER ELECTROLESS NICKEL |
| ZB | ZINC COBALT OLIVE DRAB OVER ELECTROLESS NICKEL |
| ZN | ZINC NICKEL BLACK PASSIVATE OVER ELECTROLESS NICKEL |

LIST NOT EXHAUSTIVE, SEE PLATING TABLE FOR OTHER OPTIONS

95F1-16-08-1-C-CC

- SERIES
- CONNECTOR INTERFACE
- ANGLE
- SHELL SIZE (TABLE 1)
- ENTRY SIZE (TABLE 2)
- MATERIAL
  - ALUMINIUM ALLOY
- FINISH (TABLE 3)
- CABLE CLAMP OPTION
  - OMIT FOR PLAIN NUT

**For tooling and assembly instructions see www.polamco.com**

Sealing and strain relief achieved with Heat Shrink Boot (see page 354)
Adhesive if required for assembly (see page 352)
Screenbraid for EMC/RFI screening (see page 350)

DRAWING NOT TO SCALE, DIMENSIONS IN MM

SEE PAGES 18-26 FOR COMPLETE LIST OF AVAILABLE MATERIALS, FINISHES AND CONNECTOR INTERFACES
(DIMENSIONS, FORM AND O RING SUBJECT TO CHANGE DEPENDING ON BACKSHELL MATERIAL AND CONNECTOR INTERFACE)

THIS DRAWING IS THE PROPERTY OF POLAMCO LTD AND MUST NOT BE USED FOR COMMERCIAL PURPOSES WITHOUT WRITTEN CONSENT OF THE COMPANY

# 95H - Braid Trap Termination

## Interface H - MIL-DTL-38999 SERIES III & IV

Polamco

**Interconnect Solutions Worldwide**



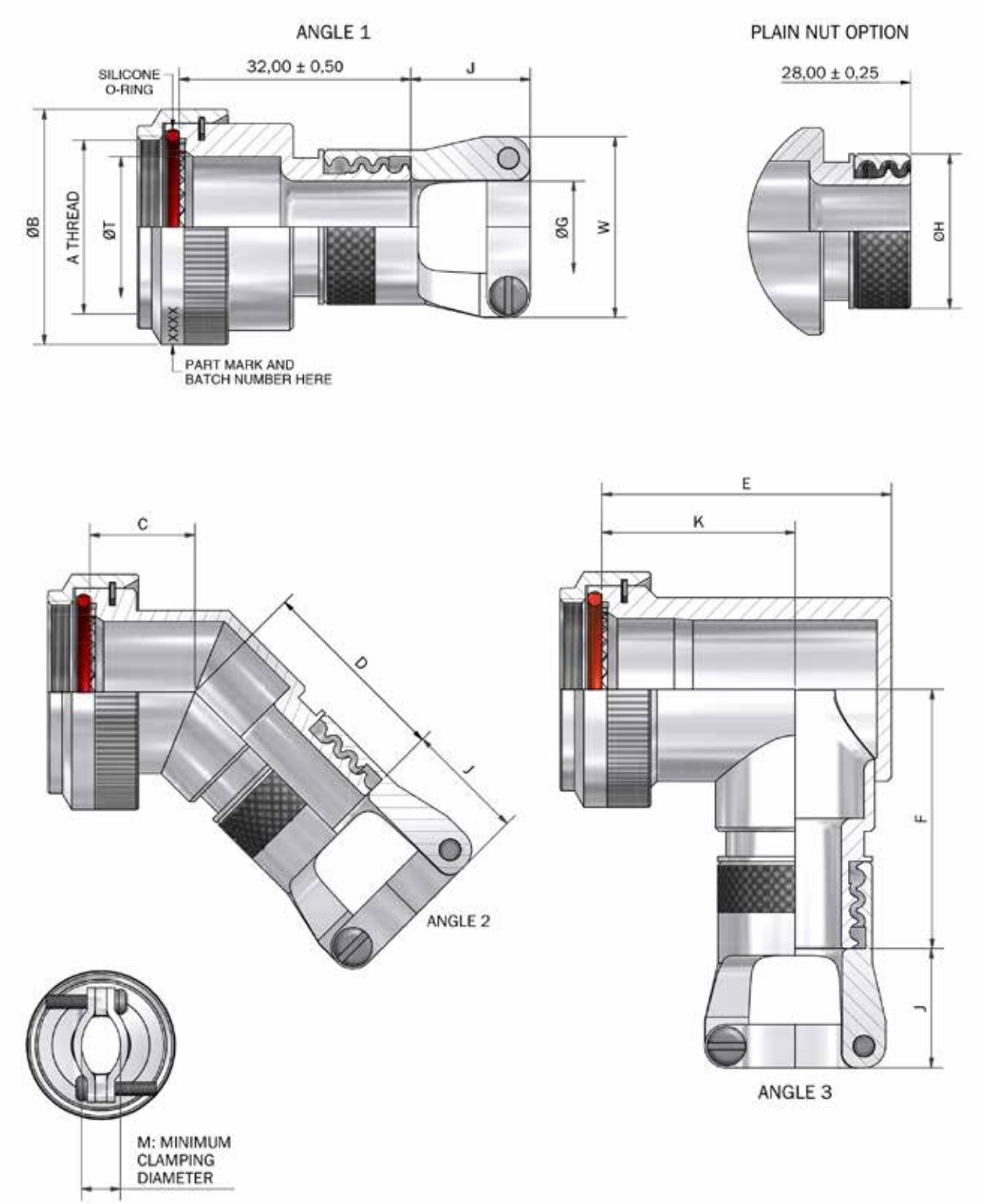


DRAWING NOT TO SCALE, DIMENSIONS IN MM

SEE PAGES 18-26 FOR COMPLETE LIST OF AVAILABLE MATERIALS, FINISHES AND CONNECTOR INTERFACES
(DIMENSIONS, FORM AND O RING SUBJECT TO CHANGE DEPENDING ON BACKSHELL MATERIAL AND CONNECTOR INTERFACE)



THIS DRAWING IS THE PROPERTY OF POLAMCO LTD AND MUST NOT BE USED FOR COMMERCIAL PURPOSES WITHOUT WRITTEN CONSENT OF THE COMPANY

# 95H - Braid Trap Termination

## Interface H - MIL-DTL-38999 SERIES III & IV

Polamco

**Interconnect Solutions Worldwide**

TABLE 1

| SHELL SIZE | A THREAD | ØB MAX | ØT MIN | C MAX | D MAX | D PLAIN NUT | E MAX | F MAX | F PLAIN NUT | K ±0,5 |
|---|---|---|---|---|---|---|---|---|---|---|
| 09 | M12 x 1.0 | 18,0 | 6,7 | 13,1 | 24,5 | 20,5 | 25,7 | 30,5 | 26,5 | 17,5 |
| 11 | M15 x 1.0 | 21,0 | 10,2 | 13,9 | 25,3 | 21,3 | 26,7 | 32,2 | 28,2 | 17,5 |
| 13 | M18 x 1.0 | 24,5 | 13,5 | 14,5 | 25,6 | 21,6 | 31,2 | 33,7 | 32,7 | 20,0 |
| 15 | M22 x 1.0 | 29,0 | 16,2 | 15,5 | 26,5 | 22,5 | 37,2 | 35,2 | 31,2 | 24,5 |
| 17 | M25 x 1.0 | 32,5 | 19,4 | 16,1 | 27,4 | 23,4 | 40,2 | 36,9 | 32,9 | 26,7 |
| 19 | M28 x 1.0 | 35,5 | 21,8 | 16,8 | 27,9 | 23,9 | 44,7 | 38,5 | 34,6 | 27,0 |
| 21 | M31 x 1.0 | 37,0 | 25,1 | 17,1 | 28,7 | 24,7 | 49,2 | 40,1 | 36,2 | 30,5 |
| 23 | M34 x 1.0 | 40,0 | 28,2 | 17,7 | 29,1 | 25,1 | 51,7 | 41,6 | 37,6 | 31,5 |
| 25 | M37 x 1.0 | 43,5 | 31,4 | 18,4 | 29,9 | 25,9 | 53,2 | 43,1 | 39,1 | 28,5 |

TABLE 2

| ENTRY SIZE | ØG MIN | W MAX | ØH MAX | J MAX | M ±0,5 |
|---|---|---|---|---|---|
| 03 | 4,7 | 17,3 | 15,2 | 12,7 | 5,8 |
| 04 | 6,3 | 18,9 | 15,2 | 12,7 | 5,7 |
| 05 | 7,9 | 20,5 | 16,8 | 12,7 | 6,8 |
| 06 | 9,5 | 22,1 | 18,4 | 12,7 | 6,9 |
| 07 | 11,1 | 23,6 | 20,0 | 12,7 | 8,1 |
| 08 | 12,7 | 25,1 | 21,6 | 15,7 | 8,5 |
| 09 | 14,2 | 26,8 | 23,2 | 15,7 | 9,7 |
| 10 | 15,8 | 28,4 | 24,8 | 15,7 | 10,4 |
| 11 | 17,4 | 30,1 | 26,4 | 18,7 | 11,5 |
| 12 | 19,0 | 31,6 | 27,9 | 18,7 | 11,4 |
| 13 | 20,6 | 33,1 | 29,5 | 18,7 | 14,0 |
| 14 | 22,2 | 34,8 | 31,1 | 21,7 | 15,4 |
| 15 | 23,8 | 36,5 | 32,7 | 21,7 | 16,8 |
| 16 | 25,4 | 37,9 | 34,3 | 21,7 | 17,3 |
| 17 | 27,0 | 39,5 | 35,9 | 21,7 | 18,8 |
| 18 | 28,6 | 41,1 | 37,5 | 21,7 | 19,5 |
| 19 | 30,2 | 42,7 | 39,3 | 23,2 | 25,9 |
| 20 | 31,8 | 44,3 | 40,6 | 23,2 | 23,4 |
| 21 | 33,3 | 45,8 | 42,2 | 23,2 | 24,8 |
| 22 | 35,0 | N/A | 43,8 | N/A | N/A |
| 23 | 36,5 | 47,4 | 45,4 | 23,2 | 25,4 |
| 24 | 38,1 | 50,9 | 47,0 | 23,2 | 27,4 |

TABLE 3

| CODE | FINISH |
|---|---|
| C | ELECTROLESS NICKEL |
| B | CADMIUM OLIVE DRAB OVER ELECTROLESS NICKEL |
| ZB | ZINC COBALT OLIVE DRAB OVER ELECTROLESS NICKEL |
| ZN | ZINC NICKEL BLACK PASSIVATE OVER ELECTROLESS NICKEL |

LIST NOT EXHAUSTIVE, SEE PLATING TABLE FOR OTHER OPTIONS

95H1-17-08-1-C-CC

- SERIES
- CONNECTOR INTERFACE
- ANGLE
- SHELL SIZE (TABLE 1)
- ENTRY SIZE (TABLE 2)
- MATERIAL
  - ALUMINIUM ALLOY
- FINISH (TABLE 3)
- CABLE CLAMP OPTION
  - OMIT FOR PLAIN NUT

**For tooling and assembly instructions see www.polamco.com**

Sealing and strain relief achieved with Heat Shrink Boot (see page 354)
Adhesive if required for assembly (see page 352)
Screenbraid for EMC/RFI screening (see page 350)

DRAWING NOT TO SCALE, DIMENSIONS IN MM

SEE PAGES 18-26 FOR COMPLETE LIST OF AVAILABLE MATERIALS, FINISHES AND CONNECTOR INTERFACES
(DIMENSIONS, FORM AND O RING SUBJECT TO CHANGE DEPENDING ON BACKSHELL MATERIAL AND CONNECTOR INTERFACE)



THIS DRAWING IS THE PROPERTY OF POLAMCO LTD AND MUST NOT BE USED FOR
COMMERCIAL PURPOSES WITHOUT WRITTEN CONSENT OF THE COMPANY

# 95 (SS) - Braid Trap Termination Stainless Steel

## Interface H - MIL-DTL-38999 SERIES III & IV

Polamco

**Interconnect Solutions Worldwide**



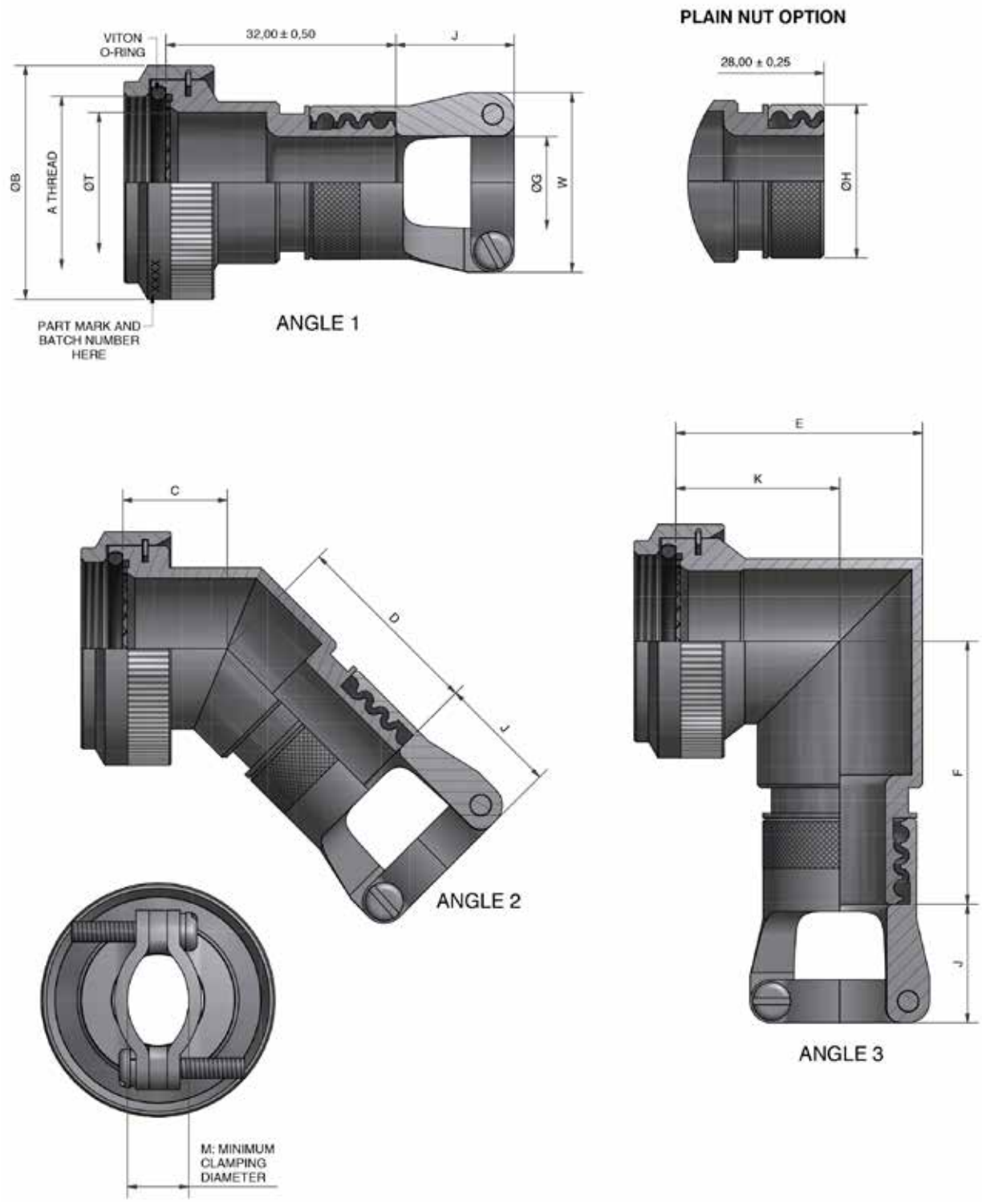


DRAWING NOT TO SCALE, DIMENSIONS IN MM

SEE PAGES 18-26 FOR COMPLETE LIST OF AVAILABLE MATERIALS, FINISHES AND CONNECTOR INTERFACES
(DIMENSIONS, FORM AND O RING SUBJECT TO CHANGE DEPENDING ON BACKSHELL MATERIAL AND CONNECTOR INTERFACE)



THIS DRAWING IS THE PROPERTY OF POLAMCO LTD AND MUST NOT BE USED FOR COMMERCIAL PURPOSES WITHOUT WRITTEN CONSENT OF THE COMPANY

# 95 (SS) - Braid Trap Termination Stainless Steel

## Interface H - MIL-DTL-38999 SERIES III & IV

Polamco

**Interconnect Solutions Worldwide**

TABLE 1

| SHELL SIZE | A THREAD | ØB MAX | ØT MIN | C ± 0,5 | D ± 0,5 | D PLAIN NUT | E MAX | K ± 0,5 | F ± 0,5 | F PLAIN NUT |
|---|---|---|---|---|---|---|---|---|---|---|
| 09 | M12 x 1,0 | 18,0 | 6,7 | 12,0 | 24,0 | 20,0 | 21,4 | 16,4 | 34,2 | 30,2 |
| 11 | M15 x 1,0 | 21,0 | 9,9 | 12,5 | 24,7 | 20,7 | 24,5 | 17,3 | 36,0 | 32,0 |
| 13 | M18 x 1,0 | 24,5 | 12,8 | 13,1 | 25,1 | 21,1 | 28,5 | 19,5 | 37,5 | 33,5 |
| 15 | M22 x 1,0 | 29,0 | 16,0 | 13,5 | 26,0 | 22,0 | 31,3 | 21,0 | 34,6 | 34,6 |
| 17 | M25 x 1,0 | 32,5 | 19,2 | 14,5 | 26,8 | 22,8 | 34,4 | 22,8 | 36,6 | 36,6 |
| 19 | M28 x 1,0 | 35,5 | 21,4 | 15,5 | 27,3 | 23,3 | 38,7 | 25,3 | 42,3 | 38,3 |
| 21 | M31 x 1,0 | 37,0 | 24,6 | 16,0 | 28,2 | 24,2 | 40,9 | 26,1 | 43,9 | 39,9 |
| 23 | M34 x 1,0 | 40,0 | 27,7 | 16,5 | 28,5 | 24,5 | 43,9 | 27,6 | 45,4 | 41,4 |
| 25 | M37 x 1,0 | 43,5 | 30,9 | 17,1 | 29,4 | 25,4 | 46,6 | 29,1 | 46,9 | 42,9 |

TABLE 2

| ENTRY SIZE | ØG MIN | W MAX | H MAX | J MAX | M ± 0,5 |
|---|---|---|---|---|---|
| 03 | 4,7 | 17,3 | 15,2 | 12,7 | 5,8 |
| 04 | 6,3 | 18,9 | 15,2 | 12,7 | 5,7 |
| 05 | 7,9 | 20,5 | 16,8 | 12,7 | 6,8 |
| 06 | 9,5 | 22,1 | 18,4 | 12,7 | 6,9 |
| 07 | 11,1 | 23,6 | 20,0 | 12,7 | 8,1 |
| 08 | 12,7 | 25,1 | 21,6 | 15,7 | 8,5 |
| 09 | 14,2 | 26,8 | 23,2 | 15,7 | 9,7 |
| 10 | 15,8 | 28,4 | 24,8 | 15,7 | 10,4 |
| 11 | 17,4 | 30,1 | 26,4 | 18,7 | 11,5 |
| 12 | 19,0 | 31,6 | 27,9 | 18,7 | 11,4 |
| 13 | 20,6 | 33,1 | 29,5 | 18,7 | 14,0 |
| 14 | 22,2 | 34,8 | 31,1 | 21,7 | 15,4 |
| 15 | 23,8 | 36,5 | 32,7 | 21,7 | 16,8 |
| 16 | 25,4 | 37,9 | 34,3 | 21,7 | 17,3 |
| 17 | 27,0 | 39,5 | 35,9 | 21,7 | 18,8 |
| 18 | 28,6 | 41,1 | 37,5 | 21,7 | 19,5 |
| 19 | 30,2 | 42,7 | 39,3 | 23,2 | 25,9 |
| 20 | 31,8 | 44,3 | 40,6 | 23,2 | 23,4 |
| 21 | 33,3 | 45,8 | 42,2 | 23,2 | 24,8 |
| 22 | 35,0 | N/A | 43,8 | N/A | N/A |
| 23 | 36,5 | 47,4 | 45,4 | 23,2 | 25,4 |
| 24 | 38,1 | 50,9 | 47,0 | 23,2 | 27,4 |

TABLE 3

| CODE | MATERIAL / PLATING |
|---|---|
| 4-J | STAINLESS STEEL 303 S31 / PASSIVATE |
| 46-J | STAINLESS STEEL 316 / PASSIVATE |

LIST NOT EXHAUSTIVE, SEE PLATING TABLE FOR OTHER OPTIONS

95H1-17-08-4-J-CC

- POLAMCO SERIES
- CONNECTOR INTERFACE
- ANGLE
- SHELL SIZE (TABLE 1)
- ENTRY SIZE (TABLE 2)
- MATERIAL (TABLE 3)
- FINISH (TABLE 3)
- CABLE CLAMP OPTION
  OMIT FOR PLAIN NUT

**For tooling and assembly instructions see www.polamco.com**

Sealing and strain relief achieved with Heat Shrink Boot (see page 354)
Adhesive if required for assembly (see page 352)
Screenbraid for EMC/RFI screening (see page 350)

DRAWING NOT TO SCALE, DIMENSIONS IN MM

SEE PAGES 18-26 FOR COMPLETE LIST OF AVAILABLE MATERIALS, FINISHES AND CONNECTOR INTERFACES
(DIMENSIONS, FORM AND O RING SUBJECT TO CHANGE DEPENDING ON BACKSHELL MATERIAL AND CONNECTOR INTERFACE)

THIS DRAWING IS THE PROPERTY OF POLAMCO LTD AND MUST NOT BE USED FOR COMMERCIAL PURPOSES WITHOUT WRITTEN CONSENT OF THE COMPANY

# 95 (NB) - Braid Trap Termination
# Nickel Aluminium Bronze

## Interface H - MIL-DTL-38999 SERIES III & IV

Polamco

**Interconnect Solutions Worldwide**

BRAID TRAP

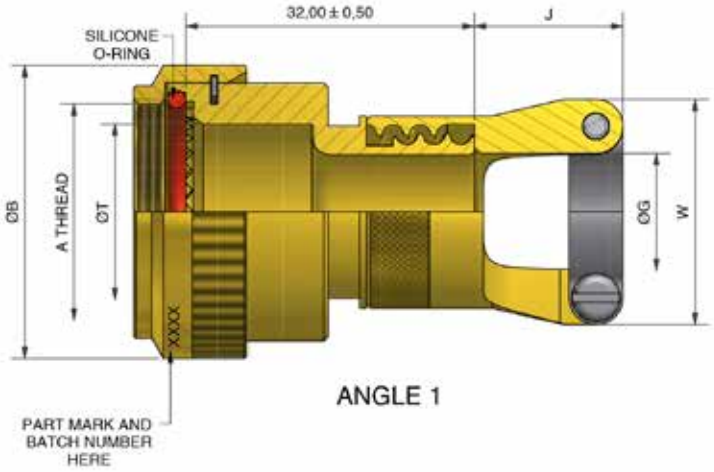


ANGLE 1

PLAIN NUT OPTION

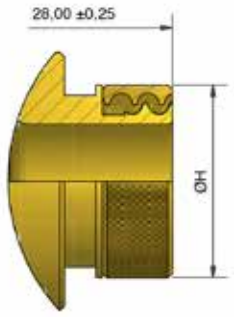


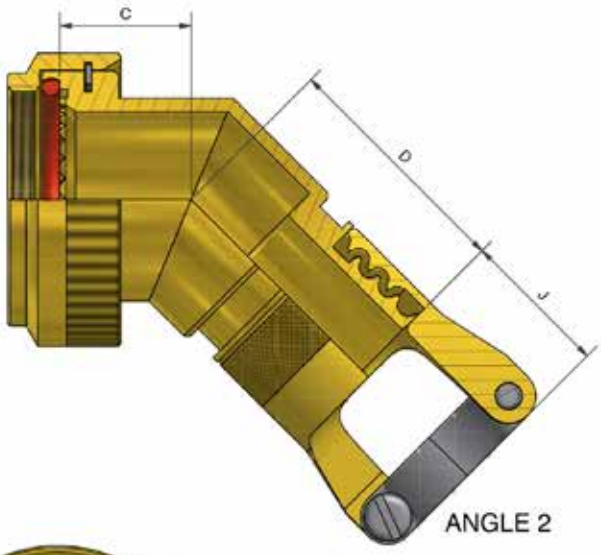


ANGLE 2

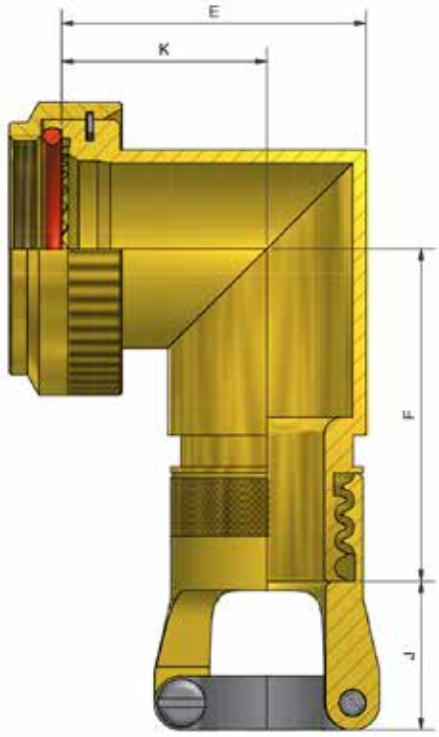


ANGLE 3

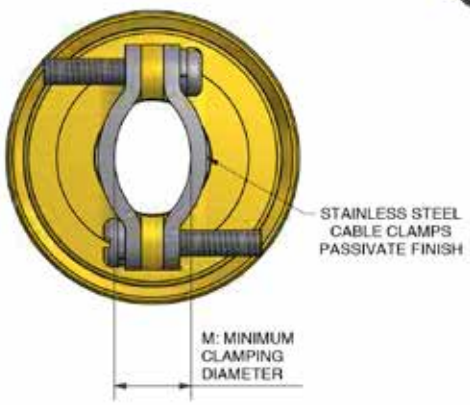


DRAWING NOT TO SCALE, DIMENSIONS IN MM

SEE PAGES 18-26 FOR COMPLETE LIST OF AVAILABLE MATERIALS, FINISHES AND CONNECTOR INTERFACES
(DIMENSIONS, FORM AND O RING SUBJECT TO CHANGE DEPENDING ON BACKSHELL MATERIAL AND CONNECTOR INTERFACE)



THIS DRAWING IS THE PROPERTY OF POLAMCO LTD AND MUST NOT BE USED FOR COMMERCIAL PURPOSES WITHOUT WRITTEN CONSENT OF THE COMPANY

# 95 (NB) - Braid Trap Termination
# Nickel Aluminium Bronze
## Interface H - MIL-DTL-38999 SERIES III & IV

Polamco

**Interconnect Solutions Worldwide**

TABLE 1

| SHELL SIZE | A THREAD | ØB MAX | ØT MIN | C ±0,5 | D ±0,5 | D PLAIN NUT | E MAX | F ±0,5 | F PLAIN NUT | K ±0,5 |
|---|---|---|---|---|---|---|---|---|---|---|
| 09 | M12 x 1,0 | 18,0 | 6,7 | 12,0 | 24,0 | 20,0 | 21,4 | 34,2 | 30,2 | 16,3 |
| 11 | M15 x 1,0 | 21,0 | 9,9 | 12,5 | 24,7 | 20,7 | 24,5 | 36,0 | 32,0 | 17,2 |
| 13 | M18 x 1,0 | 24,5 | 12,8 | 13,1 | 25,1 | 21,1 | 28,5 | 37,5 | 33,5 | 19,4 |
| 15 | M22 x 1,0 | 29,0 | 16,0 | 13,5 | 26,0 | 22,0 | 31,3 | 39,0 | 35,0 | 21,0 |
| 17 | M25 x 1,0 | 32,5 | 19,2 | 14,5 | 26,8 | 22,8 | 34,4 | 40,7 | 36,7 | 22,8 |
| 19 | M28 x 1,0 | 35,5 | 21,4 | 15,5 | 27,3 | 23,3 | 38,7 | 42,3 | 38,3 | 25,3 |
| 21 | M31 x 1,0 | 37,0 | 24,6 | 16,0 | 28,2 | 24,2 | 40,9 | 43,9 | 39,9 | 26,1 |
| 23 | M34 x 1,0 | 40,0 | 27,7 | 16,5 | 28,5 | 24,5 | 43,9 | 45,4 | 41,4 | 27,6 |
| 25 | M37 x 1,0 | 43,5 | 30,9 | 17,1 | 29,4 | 25,4 | 46,6 | 46,9 | 42,9 | 29,1 |

TABLE 2

| ENTRY SIZE | ØG MIN | W MAX | ØH MAX | J MAX | M ±0,5 |
|---|---|---|---|---|---|
| 03 | 4,7 | 17,3 | 15,2 | 12,7 | 5,8 |
| 04 | 6,3 | 18,9 | 15,2 | 12,7 | 5,7 |
| 05 | 7,9 | 20,5 | 16,8 | 12,7 | 6,8 |
| 06 | 9,5 | 22,1 | 18,4 | 12,7 | 6,9 |
| 07 | 11,1 | 23,6 | 20,0 | 12,7 | 8,1 |
| 08 | 12,7 | 25,1 | 21,6 | 15,7 | 8,5 |
| 09 | 14,2 | 26,8 | 23,2 | 15,7 | 9,7 |
| 10 | 15,8 | 28,4 | 24,8 | 15,7 | 10,4 |
| 11 | 17,4 | 30,1 | 26,4 | 18,7 | 11,5 |
| 12 | 19,0 | 31,6 | 27,9 | 18,7 | 11,4 |
| 13 | 20,6 | 33,1 | 29,5 | 18,7 | 14,0 |
| 14 | 22,2 | 34,8 | 31,1 | 21,7 | 15,4 |
| 15 | 23,8 | 36,5 | 32,7 | 21,7 | 16,8 |
| 16 | 25,4 | 37,9 | 34,3 | 21,7 | 17,3 |
| 17 | 27,0 | 39,5 | 35,9 | 21,7 | 18,8 |
| 18 | 28,6 | 41,1 | 37,5 | 21,7 | 19,5 |
| 19 | 30,2 | 42,7 | 39,3 | 23,2 | 25,9 |
| 20 | 31,8 | 44,3 | 40,6 | 23,2 | 23,4 |
| 21 | 33,3 | 45,8 | 42,2 | 23,2 | 24,8 |
| 22 | 35,0 | N/A | 43,8 | N/A | N/A |
| 23 | 36,5 | 47,4 | 45,4 | 23,2 | 25,4 |
| 24 | 38,1 | 50,9 | 47,0 | 23,2 | 27,4 |

95H1-17-08-2-Z-CC

SERIES
CONNECTOR INTERFACE
ANGLE
SHELL SIZE (TABLE 1)
ENTRY SIZE (TABLE 2)
MATERIAL
NICKEL ALUMINIUM BRONZE
FINISH
SHOT BLAST
CABLE CLAMP OPTION
OMIT FOR PLAIN NUT

**For tooling and assembly instructions see www.polamco.com**

Sealing and strain relief achieved with Heat Shrink Boot (see page 354)
Adhesive if required for assembly (see page 352)
Screenbraid for EMC/RFI screening (see page 350)

DRAWING NOT TO SCALE, DIMENSIONS IN MM

SEE PAGES 18-26 FOR COMPLETE LIST OF AVAILABLE MATERIALS, FINISHES AND CONNECTOR INTERFACES
(DIMENSIONS, FORM AND O RING SUBJECT TO CHANGE DEPENDING ON BACKSHELL MATERIAL AND CONNECTOR INTERFACE)



THIS DRAWING IS THE PROPERTY OF POLAMCO LTD AND MUST NOT BE USED FOR
COMMERCIAL PURPOSES WITHOUT WRITTEN CONSENT OF THE COMPANY

# 95F3C - Braid Trap Termination Cobra Head

## Interface F - MIL-DTL-38999 SERIES I & II

Polamco

**Interconnect Solutions Worldwide**



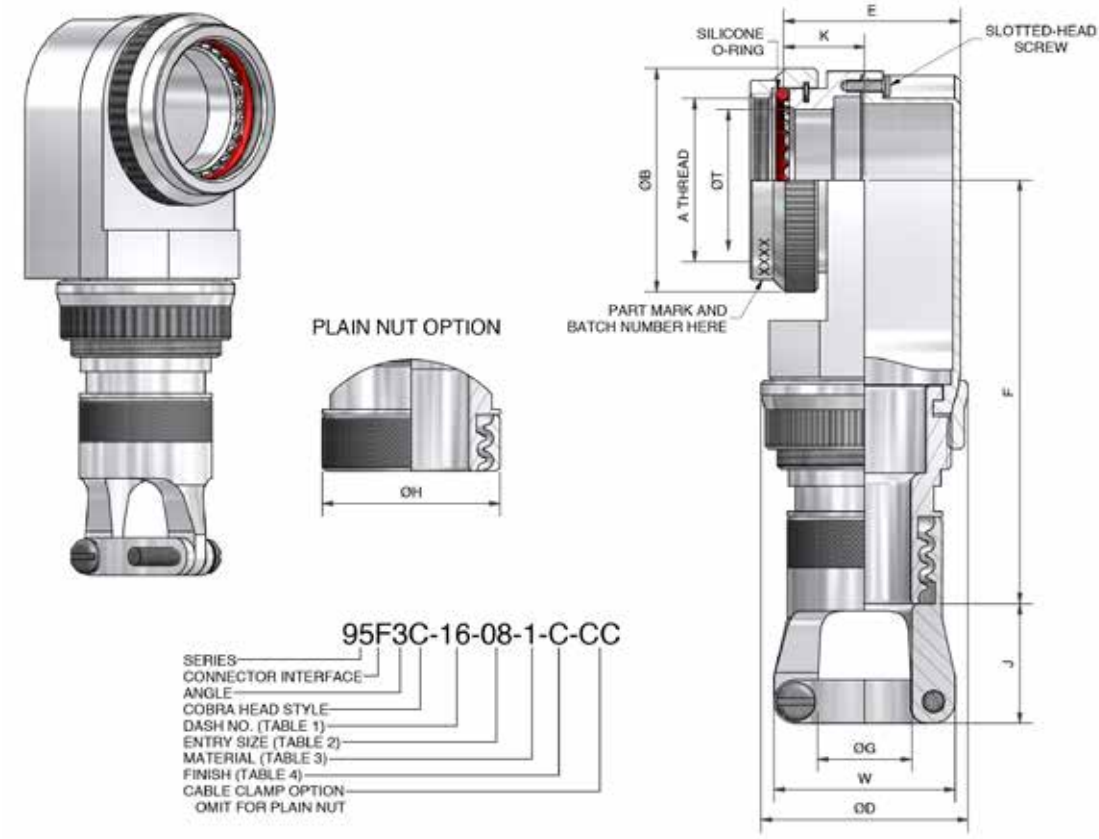


TABLE 1

| DASH NO. | SHELL SIZE SERIES I | SHELL SIZE SERIES II | A THREAD | ØB MAX | ØT MIN | D MAX | E MAX | F MAX | K ± 0,5 | MAX ENTRY |
|---|---|---|---|---|---|---|---|---|---|---|
| 08 | 09 | 08 | 7/16-28UNEF | 18,3 | 6,6 | 18,7 | 17,7 | 48,6 | 8,7 | 04 |
| 10 | 11 | 10 | 9/16-24UNEF | 21,5 | 10,1 | 21,7 | 19,0 | 52,7 | 8,7 | 06 |
| 12 | 13 | 12 | 11/16-24UNEF | 24,5 | 12,9 | 24,7 | 22,1 | 52,7 | 8,7 | 08 |
| 14 | 15 | 14 | 13/16-20UNEF | 27,8 | 16,1 | 24,7 | 22,1 | 56,5 | 10,2 | 08 |
| 16 | 17 | 16 | 15/16-20UNEF | 30,8 | 19,3 | 28,7 | 25,1 | 58,8 | 11,2 | 10 |
| 18 | 19 | 18 | 1 1/16-18UNEF | 34,1 | 21,7 | 28,7 | 25,1 | 58,8 | 11,2 | 10 |
| 20 | 21 | 20 | 1 3/16-18UNEF | 37,3 | 24,9 | 28,7 | 25,1 | 61,5 | 11,2 | 10 |
| 22 | 23 | 22 | 1 5/16-18UNEF | 40,5 | 28,1 | 31,7 | 28,1 | 65,0 | 12,7 | 12 |
| 24 | 25 | 24 | 1 7/16-18UNEF | 43,7 | 31,3 | 31,7 | 28,1 | 65,0 | 12,7 | 12 |

TABLE 2

| ENTRY SIZE | ØG MIN | W MAX | ØH MAX | J MAX |
|---|---|---|---|---|
| 03 | 4,7 | 17,3 | 15,2 | 13,7 |
| 04 | 6,3 | 18,9 | 15,2 | 13,7 |
| 05 | 7,9 | 20,5 | 16,8 | 13,7 |
| 06 | 9,5 | 22,1 | 18,4 | 13,7 |
| 07 | 11,1 | 23,6 | 20,0 | 13,7 |
| 08 | 12,7 | 25,1 | 21,6 | 16,7 |
| 09 | 14,2 | 26,8 | 23,2 | 16,7 |
| 10 | 15,8 | 28,4 | 24,8 | 16,7 |
| 11 | 17,4 | 30,1 | 26,4 | 19,7 |
| 12 | 19,0 | 31,6 | 27,9 | 19,7 |

TABLE 3

| CODE | MATERIAL / PLATING |
|---|---|
| 1-C | ALUMINIUM / ELECTROLESS NICKEL |
| 1-B | ALUMINIUM / CADMIUM OLIVE DRAB OVER ELECTROLESS NICKEL |
| 1-ZB | ALUMINIUM / ZINC COBALT OLIVE DRAB OVER ELECTROLESS NICKEL |
| 1-ZN | ALUMINIUM / ZINC NICKEL BLACK PASSIVATE OVER ELECTROLESS NICKEL |
| 4-J | STAINLESS STEEL / PASSIVATE |
| 2-Z | NICKEL ALUMINIUM BRONZE / SHOT BLAST |

LIST NOT EXHAUSTIVE, SEE PLATING TABLE FOR OTHER OPTIONS

**For tooling and assembly instructions see www.polamco.com**

Sealing and strain relief achieved with Heat Shrink Boot (see page 354)
Adhesive if required for assembly (see page 352)
Screenbraid for EMC/RFI screening (see page 350)

DRAWING NOT TO SCALE, DIMENSIONS IN MM

SEE PAGES 18-26 FOR COMPLETE LIST OF AVAILABLE MATERIALS, FINISHES AND CONNECTOR INTERFACES
(DIMENSIONS, FORM AND O RING SUBJECT TO CHANGE DEPENDING ON BACKSHELL MATERIAL AND CONNECTOR INTERFACE)



THIS DRAWING IS THE PROPERTY OF POLAMCO LTD AND MUST NOT BE USED FOR COMMERCIAL PURPOSES WITHOUT WRITTEN CONSENT OF THE COMPANY

# 95H3C - Braid Trap Termination Cobra Head

## Interface H - MIL-DTL-38999 SERIES III & IV

Polamco

**Interconnect Solutions Worldwide**

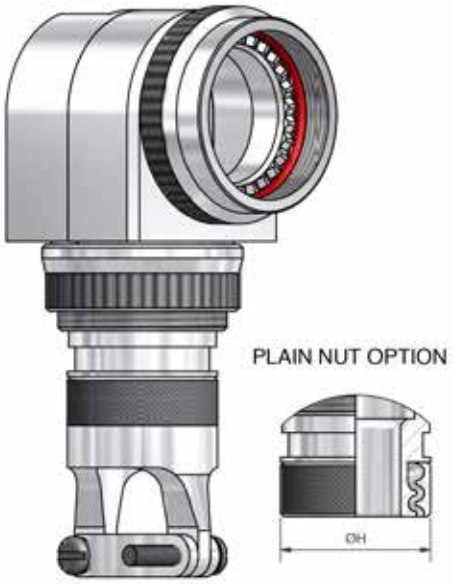


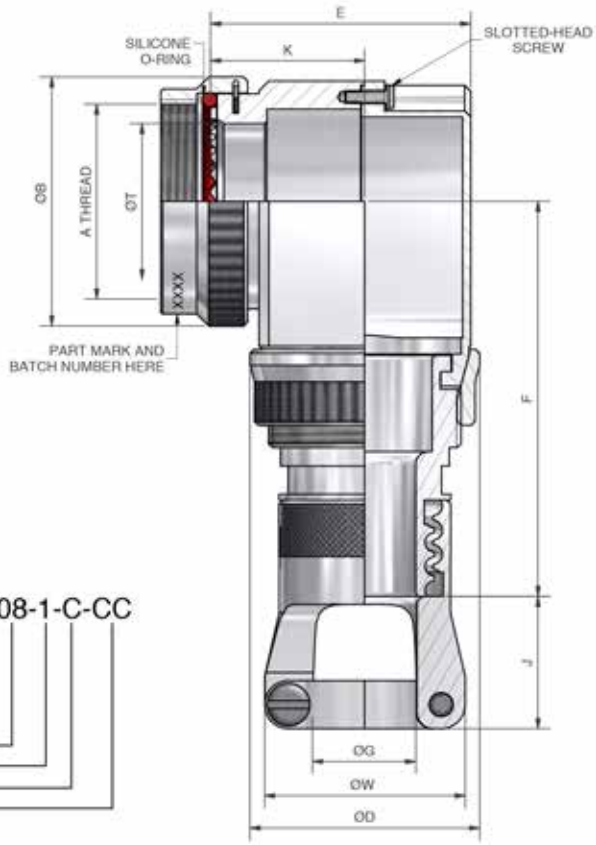


95H3C-17-08-1-C-CC

- SERIES
- CONNECTOR INTERFACE
- ANGLE
- COBRA HEAD STYLE
- SHELL SIZE (TABLE 1)
- ENTRY SIZE (TABLE 2)
- MATERIAL (TABLE 3)
- FINISH (TABLE 3)
- CABLE CLAMP OPTION (OMIT FOR PLAIN NUT)

TABLE 1

| SHELL SIZE | A THREAD | ØB MAX | ØT MIN | ØD MAX | E MAX | F MAX | F MAX PLAIN NUT | K +/-0,5 | MAX ENTRY |
|---|---|---|---|---|---|---|---|---|---|
| 09 | M12 x 1.0 | 18,0 | 6,7 | 18,7 | 17,7 | 48,6 | 44,6 | 8,7 | 04 |
| 11 | M15 x 1.0 | 21,0 | 10,2 | 21,7 | 19,0 | 52,7 | 48,7 | 8,7 | 06 |
| 13 | M18 x 1.0 | 24,5 | 13,5 | 24,7 | 22,1 | 52,7 | 48,7 | 8,7 | 08 |
| 15 | M22 x 1.0 | 27,5 | 16,2 | 24,7 | 22,1 | 56,5 | 52,5 | 10,2 | 08 |
| 17 | M25 x 1.0 | 31,0 | 19,4 | 28,7 | 25,1 | 58,8 | 54,8 | 11,2 | 10 |
| 19 | M28 x 1.0 | 34,0 | 21,8 | 28,7 | 25,1 | 61,5 | 57,5 | 11,2 | 10 |
| 21 | M31 x 1.0 | 37,0 | 25,1 | 28,7 | 25,1 | 62,5 | 58,5 | 11,2 | 10 |
| 23 | M34 x 1.0 | 40,0 | 28,2 | 31,7 | 28,1 | 65,0 | 61,0 | 12,7 | 12 |
| 25 | M37 x 1.0 | 43,5 | 31,4 | 31,7 | 28,1 | 66,5 | 62,5 | 12,7 | 12 |

TABLE 2

| ENTRY SIZE | ØG MIN | ØH MAX | ØW MAX | J MAX |
|---|---|---|---|---|
| 03 | 4,77 | 15,2 | 17,3 | 13,7 |
| 04 | 6,35 | 15,2 | 18,9 | 13,7 |
| 05 | 7,92 | 16,8 | 20,5 | 13,7 |
| 06 | 9,52 | 18,4 | 22,1 | 13,7 |
| 07 | 11,10 | 20,0 | 23,6 | 13,7 |
| 08 | 12,70 | 21,6 | 25,1 | 16,7 |
| 09 | 14,27 | 23,2 | 26,8 | 16,7 |
| 10 | 15,88 | 24,8 | 28,4 | 16,7 |
| 11 | 17,47 | 26,4 | 30,1 | 19,7 |
| 12 | 19,05 | 27,9 | 31,6 | 19,7 |

TABLE 3

| CODE | MATERIAL / PLATING |
|---|---|
| 1-C | ALUMINIUM / ELECTROLESS NICKEL |
| 1-B | ALUMINIUM / CADMIUM OLIVE DRAB OVER ELECTROLESS NICKEL |
| 1-ZB | ALUMINIUM / ZINC COBALT OLIVE DRAB OVER ELECTROLESS NICKEL |
| 1-ZN | ALUMINIUM / ZINC NICKEL BLACK PASSIVATE OVER ELECTROLESS NICKEL |
| 4-J | STAINLESS STEEL / PASSIVATE |
| 2-Z | NICKEL ALUMINIUM BRONZE / SHOT BLAST NON REFLECTIVE |

LIST NOT EXHAUSTIVE, SEE PLATING TABLE FOR OTHER OPTIONS

**For tooling and assembly instructions see www.polamco.com**

Sealing and strain relief achieved with Heat Shrink Boot (see page 354)
Adhesive if required for assembly (see page 352)
Screenbraid for EMC/RFI screening (see page 350)

DRAWING NOT TO SCALE, DIMENSIONS IN MM

SEE PAGES 18-26 FOR COMPLETE LIST OF AVAILABLE MATERIALS, FINISHES AND CONNECTOR INTERFACES
(DIMENSIONS, FORM AND O RING SUBJECT TO CHANGE DEPENDING ON BACKSHELL MATERIAL AND CONNECTOR INTERFACE)

THIS DRAWING IS THE PROPERTY OF POLAMCO LTD AND MUST NOT BE USED FOR COMMERCIAL PURPOSES WITHOUT WRITTEN CONSENT OF THE COMPANY

# 70F - Braid Tail Backshell

## Interface F - MIL-DTL-38999 SERIES I

Polamco

**Interconnect Solutions Worldwide**



ANGLE 1

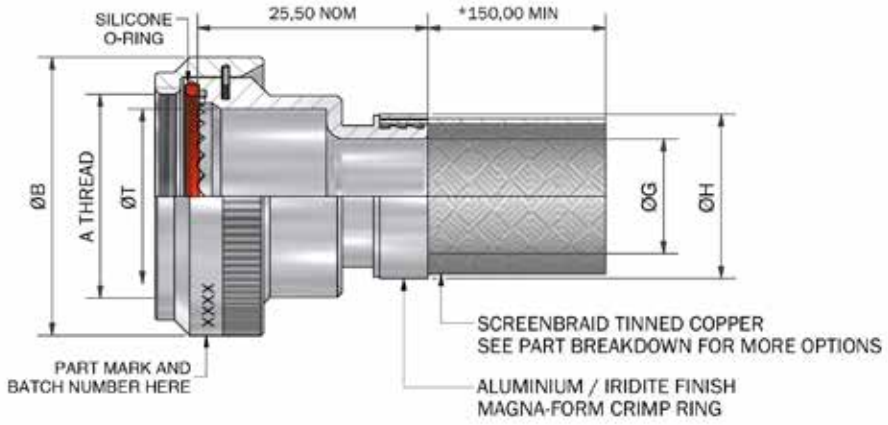


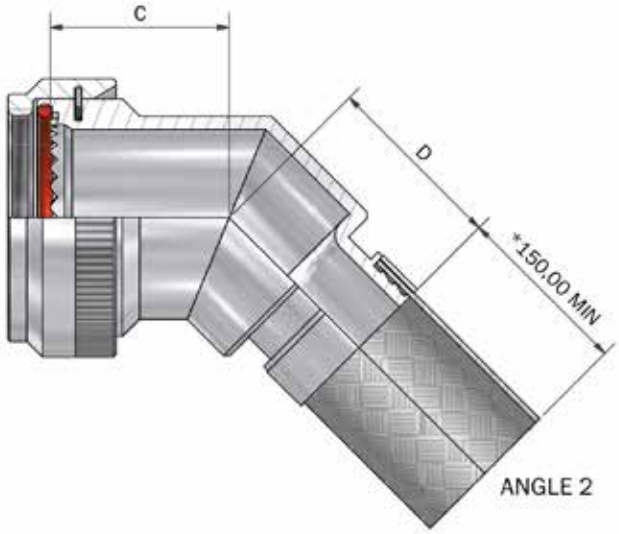


ANGLE 2

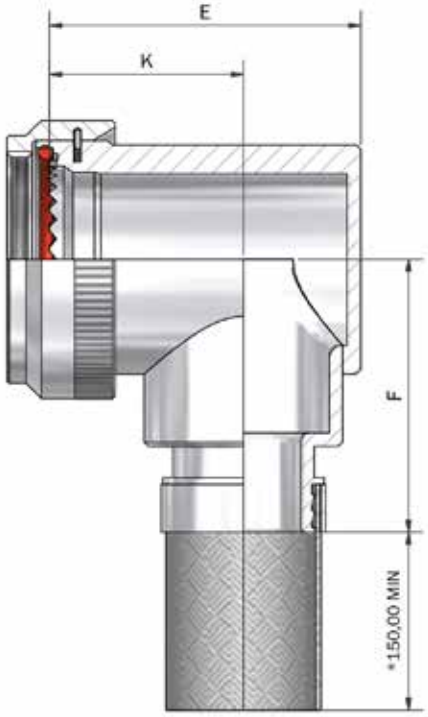


ANGLE 3

***NOTE:**
SUPPLIED WITH STANDARD BRAID TAIL LENGTH OF 150MM
CONTACT SALES OFFICE FOR NON-STANDARD BRAID TAIL LENGTHS

DRAWING NOT TO SCALE, DIMENSIONS IN MM

SEE PAGES 18-26 FOR COMPLETE LIST OF AVAILABLE MATERIALS, FINISHES AND CONNECTOR INTERFACES
(DIMENSIONS, FORM AND O RING SUBJECT TO CHANGE DEPENDING ON BACKSHELL MATERIAL AND CONNECTOR INTERFACE)



THIS DRAWING IS THE PROPERTY OF POLAMCO LTD AND MUST NOT BE USED FOR COMMERCIAL PURPOSES WITHOUT WRITTEN CONSENT OF THE COMPANY

# 70F - Braid Tail Backshell

## Interface F - MIL-DTL-38999 SERIES I

Polamco

**Interconnect Solutions Worldwide**

TABLE 1

| SHELL SIZE | A THREAD | ØB MAX | ØT MIN | C ±0,5 | D MAX | E MAX | F MAX | K ±0,5 |
|---|---|---|---|---|---|---|---|---|
| 09 | 7/16-28 UNEF | 18,0 | 6,8 | 16,4 | 17,1 | 22,7 | 24,0 | 15,0 |
| 11 | 9/16-24 UNEF | 21,0 | 10,2 | 17,2 | 18,2 | 26,2 | 25,7 | 17,0 |
| 13 | 11/16-24 UNEF | 24,5 | 13,1 | 17,6 | 18,6 | 29,2 | 27,2 | 18,0 |
| 15 | 13/16-20 UNEF | 27,8 | 16,2 | 18,5 | 19,5 | 32,2 | 28,7 | 20,0 |
| 17 | 15/16-20 UNEF | 30,8 | 19,3 | 20,2 | 20,3 | 35,7 | 30,4 | 21,5 |
| 19 | 1 1/16-18 UNEF | 34,1 | 22,3 | 19,6 | 20,8 | 39,7 | 32,0 | 23,0 |
| 21 | 1 3/16-18 UNEF | 37,3 | 25,8 | 20,4 | 21,7 | 42,2 | 33,6 | 25,0 |
| 23 | 1 5/16-18 UNEF | 41,0 | 28,3 | 20,8 | 22,0 | 45,2 | 35,1 | 26,0 |
| 25 | 1 7/16-18 UNEF | 43,7 | 31,5 | 21,7 | 22,9 | 48,2 | 36,6 | 28,0 |

TABLE 2

| ENTRY SIZE | ØG MIN | ØH MAX |
|---|---|---|
| 03 | 4,7 | 13,1 |
| 04 | 6,3 | 13,1 |
| 05 | 7,9 | 13,1 |
| 06 | 9,5 | 17,9 |
| 07 | 11,1 | 17,9 |
| 08 | 12,7 | 17,9 |
| 09 | 14,2 | 17,9 |
| 10 | 15,8 | 24,2 |
| 11 | 17,4 | 24,2 |
| 12 | 19,0 | 24,2 |
| 13 | 20,6 | 24,2 |
| 14 | 22,2 | 30,6 |
| 15 | 23,8 | 30,6 |
| 16 | 25,4 | 30,6 |
| 17 | 27,0 | 30,6 |
| 18 | 28,6 | 37,4 |
| 19 | 30,2 | 37,4 |
| 20 | 31,8 | 37,4 |
| 21 | 33,3 | 37,4 |
| 22 | 35,0 | 44,0 |
| 23 | 36,5 | 44,0 |
| 24 | 38,1 | 44,0 |

TABLE 3

| CODE | FINISH |
|---|---|
| C | ELECTROLESS NICKEL |
| B | CADMIUM OLIVE DRAB OVER ELECTROLESS NICKEL |
| ZB | ZINC COBALT OLIVE DRAB OVER ELECTROLESS NICKEL |
| ZN | ZINC NICKEL BLACK PASSIVATE OVER ELECTROLESS NICKEL |

LIST NOT EXHAUSTIVE, SEE PLATING TABLE FOR OTHER OPTIONS

BRAID TAIL

70F1-17-08-1-C-N

- SERIES
- CONNECTOR INTERFACE
- ANGLE
- SHELL SIZE (TABLE 1)
- ENTRY SIZE (TABLE 2)
- MATERIAL
  - ALUMINIUM ALLOY
- FINISH (TABLE 3)
- NICKEL PLATED BRAID TAIL
  - OMIT FOR STANDARD (TINNED COPPER)

**For tooling and assembly instructions see www.polamco.com**

Backshell supplied pre-terminated with “Magna-Form” ring and braid tail, which is attached to cable braid
Sealing and strain relief achieved with Heat Shrink Boot (see page 354)
Adhesive if required for assembly (see page 352)
Screenbraid for EMC/RFI screening (see page 350)

DRAWING NOT TO SCALE, DIMENSIONS IN MM

SEE PAGES 18-26 FOR COMPLETE LIST OF AVAILABLE MATERIALS, FINISHES AND CONNECTOR INTERFACES
(DIMENSIONS, FORM AND O RING SUBJECT TO CHANGE DEPENDING ON BACKSHELL MATERIAL AND CONNECTOR INTERFACE)

THIS DRAWING IS THE PROPERTY OF POLAMCO LTD AND MUST NOT BE USED FOR
COMMERCIAL PURPOSES WITHOUT WRITTEN CONSENT OF THE COMPANY

# 70F - Braid Tail Backshell

## Interface F - MIL-DTL-38999 SERIES II

Polamco

**Interconnect Solutions Worldwide**

ANGLE 1

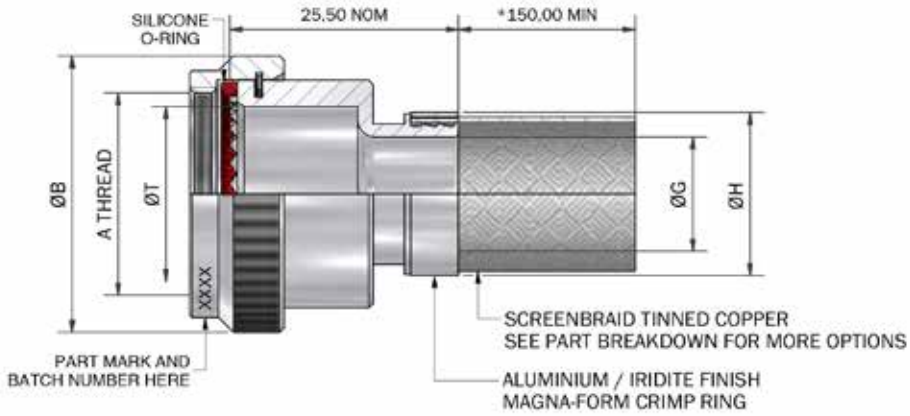


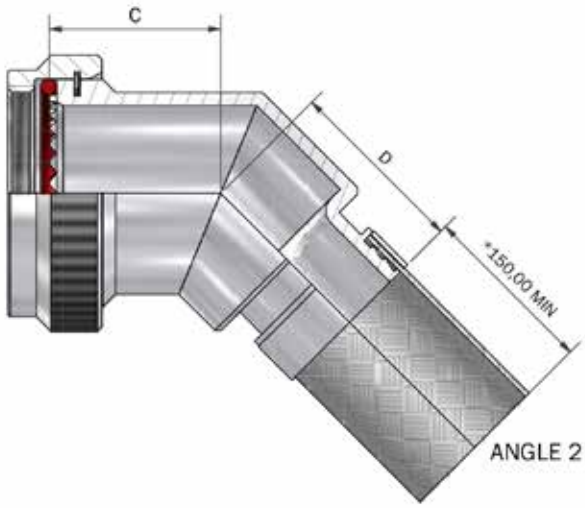


ANGLE 2

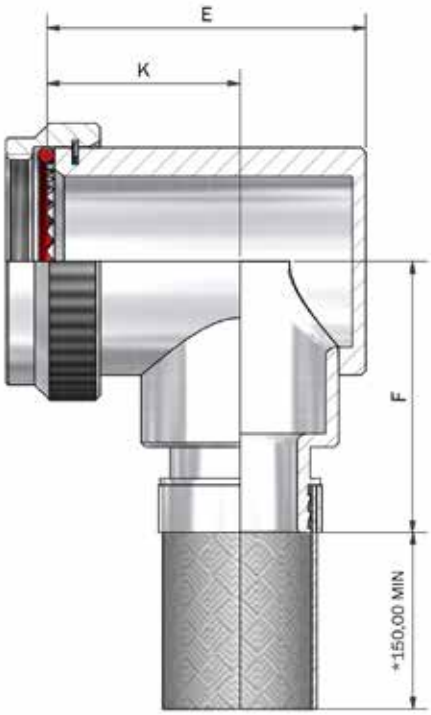


ANGLE 3

***NOTE:**
SUPPLIED WITH STANDARD BRAID TAIL LENGTH OF 150MM
CONTACT SALES OFFICE FOR NON-STANDARD BRAID TAIL LENGTHS

DRAWING NOT TO SCALE, DIMENSIONS IN MM

SEE PAGES 18-26 FOR COMPLETE LIST OF AVAILABLE MATERIALS, FINISHES AND CONNECTOR INTERFACES
(DIMENSIONS, FORM AND O RING SUBJECT TO CHANGE DEPENDING ON BACKSHELL MATERIAL AND CONNECTOR INTERFACE)





THIS DRAWING IS THE PROPERTY OF POLAMCO LTD AND MUST NOT BE USED FOR COMMERCIAL PURPOSES WITHOUT WRITTEN CONSENT OF THE COMPANY

# 70F - Braid Tail Backshell

## Interface F - MIL-DTL-38999 SERIES II

Polamco

**Interconnect Solutions Worldwide**

TABLE 1

| SHELL SIZE | A THREAD | ØB MAX | ØT MIN | C ±0,5 | D MAX | E MAX | F MAX | K ±0,5 |
|---|---|---|---|---|---|---|---|---|
| 08 | 7/16-28 UNEF | 18,3 | 6,6 | 16,4 | 17,1 | 22,7 | 24,0 | 15,0 |
| 10 | 9/16-24 UNEF | 21,5 | 10,1 | 17,2 | 18,2 | 26,2 | 25,7 | 17,0 |
| 12 | 11/16-24 UNEF | 24,5 | 12,9 | 17,6 | 18,6 | 29,2 | 27,2 | 18,0 |
| 14 | 13/16-20 UNEF | 27,8 | 16,1 | 18,5 | 19,5 | 32,2 | 28,7 | 20,0 |
| 16 | 15/16-20 UNEF | 30,8 | 19,3 | 20,2 | 20,3 | 35,7 | 30,4 | 21,5 |
| 18 | 1 1/16-18 UNEF | 34,1 | 21,7 | 19,6 | 20,8 | 39,7 | 32,0 | 23,0 |
| 20 | 1 3/16-18 UNEF | 37,3 | 24,9 | 20,4 | 21,7 | 42,2 | 33,6 | 25,0 |
| 22 | 1 5/16-18 UNEF | 40,5 | 28,1 | 20,8 | 22,0 | 45,2 | 35,1 | 26,0 |
| 24 | 1 7/16-18 UNEF | 43,7 | 31,3 | 21,7 | 22,9 | 48,2 | 36,6 | 28,0 |

TABLE 2

| ENTRY SIZE | ØG MIN | ØH MAX |
|---|---|---|
| 03 | 4,7 | 13,1 |
| 04 | 6,3 | 13,1 |
| 05 | 7,9 | 13,1 |
| 06 | 9,5 | 17,9 |
| 07 | 11,1 | 17,9 |
| 08 | 12,7 | 17,9 |
| 09 | 14,2 | 17,9 |
| 10 | 15,8 | 24,2 |
| 11 | 17,4 | 24,2 |
| 12 | 19,0 | 24,2 |
| 13 | 20,6 | 24,2 |
| 14 | 22,2 | 30,6 |
| 15 | 23,8 | 30,6 |
| 16 | 25,4 | 30,6 |
| 17 | 27,0 | 30,6 |
| 18 | 28,6 | 37,4 |
| 19 | 30,2 | 37,4 |
| 20 | 31,8 | 37,4 |
| 21 | 33,3 | 37,4 |
| 22 | 35,0 | 44,0 |
| 23 | 36,5 | 44,0 |
| 24 | 38,1 | 44,0 |

TABLE 3

| CODE | FINISH |
|---|---|
| C | ELECTROLESS NICKEL |
| B | CADMIUM OLIVE DRAB OVER ELECTROLESS NICKEL |
| ZB | ZINC COBALT OLIVE DRAB OVER ELECTROLESS NICKEL |
| ZN | ZINC NICKEL BLACK PASSIVATE OVER ELECTROLESS NICKEL |

LIST NOT EXHAUSTIVE, SEE PLATING TABLE FOR OTHER OPTIONS

70F1-16-08-1-C-N

- SERIES
- CONNECTOR INTERFACE
- ANGLE
- SHELL SIZE (TABLE 1)
- ENTRY SIZE (TABLE 2)
- MATERIAL
  - ALUMINIUM ALLOY
- FINISH (TABLE 3)
- NICKEL PLATED BRAID TAIL
  - OMIT FOR STANDARD (TINNED COPPER)

**For tooling and assembly instructions see www.polamco.com**

Backshell supplied pre-terminated with “Magna-Form” ring and braid tail, which is attached to cable braid
Sealing and strain relief achieved with Heat Shrink Boot (see page 354)
Adhesive if required for assembly (see page 352)
Screenbraid for EMC/RFI screening (see page 350)

DRAWING NOT TO SCALE, DIMENSIONS IN MM

SEE PAGES 18-26 FOR COMPLETE LIST OF AVAILABLE MATERIALS, FINISHES AND CONNECTOR INTERFACES
(DIMENSIONS, FORM AND O RING SUBJECT TO CHANGE DEPENDING ON BACKSHELL MATERIAL AND CONNECTOR INTERFACE)

THIS DRAWING IS THE PROPERTY OF POLAMCO LTD AND MUST NOT BE USED FOR
COMMERCIAL PURPOSES WITHOUT WRITTEN CONSENT OF THE COMPANY

# 70H - Braid Tail Backshell

## Interface H - MIL-DTL-38999 SERIES III & IV

Polamco

**Interconnect Solutions Worldwide**

ANGLE 1

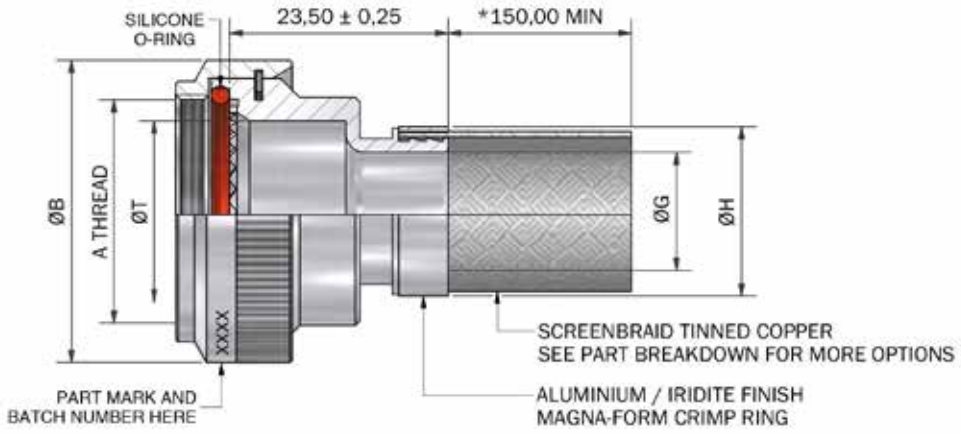


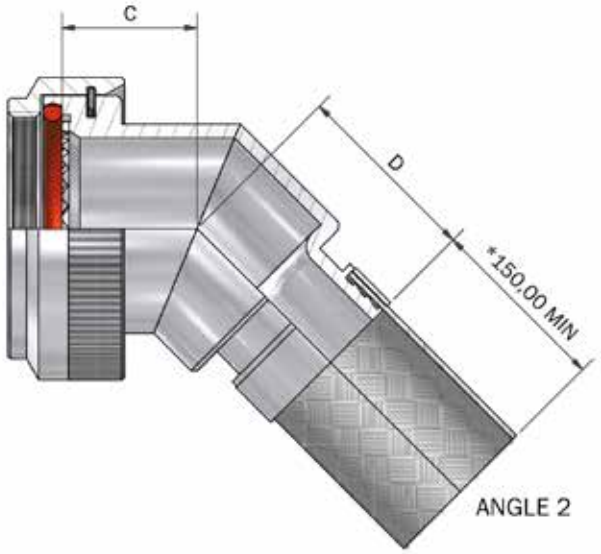


ANGLE 2

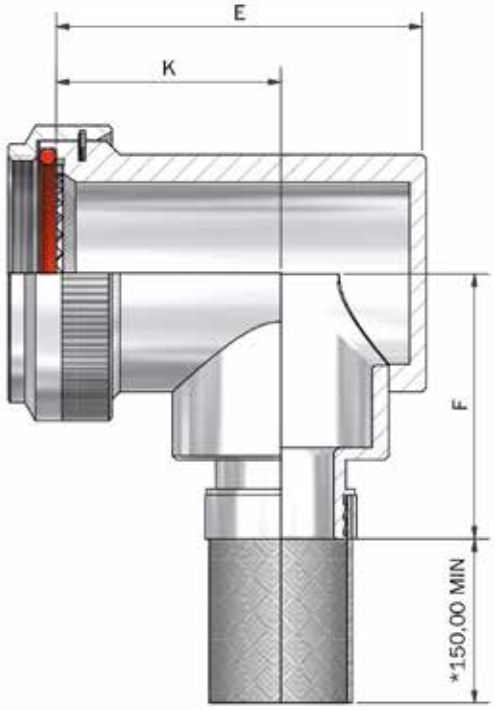


ANGLE 3

***NOTE:**
SUPPLIED WITH STANDARD BRAID TAIL LENGTH OF 150MM
CONTACT SALES OFFICE FOR NON-STANDARD BRAID TAIL LENGTHS

DRAWING NOT TO SCALE, DIMENSIONS IN MM

SEE PAGES 18-26 FOR COMPLETE LIST OF AVAILABLE MATERIALS, FINISHES AND CONNECTOR INTERFACES
(DIMENSIONS, FORM AND O RING SUBJECT TO CHANGE DEPENDING ON BACKSHELL MATERIAL AND CONNECTOR INTERFACE)





THIS DRAWING IS THE PROPERTY OF POLAMCO LTD AND MUST NOT BE USED FOR COMMERCIAL PURPOSES WITHOUT WRITTEN CONSENT OF THE COMPANY

# 70H - Braid Tail Backshell

## Interface H - MIL-DTL-38999 SERIES III & IV

Polamco

**Interconnect Solutions Worldwide**

TABLE 1

| SHELL SIZE | A THREAD | ØB MAX | ØT MIN | C MAX | D ±0,5 | E MAX | F MAX | K ±0,5 |
|---|---|---|---|---|---|---|---|---|
| 09 | M12 x 1.0 | 18,0 | 6,7 | 13,1 | 17,1 | 25,7 | 24,0 | 17,5 |
| 11 | M15 x 1.0 | 21,0 | 10,2 | 13,9 | 18,2 | 26,7 | 25,7 | 17,5 |
| 13 | M18 x 1.0 | 24,5 | 13,5 | 14,5 | 18,6 | 31,2 | 27,2 | 20,0 |
| 15 | M22 x 1.0 | 29,0 | 16,2 | 15,5 | 19,5 | 37,2 | 28,7 | 24,5 |
| 17 | M25 x 1.0 | 32,5 | 19,4 | 16,1 | 20,3 | 40,2 | 30,4 | 26,7 |
| 19 | M28 x 1.0 | 35,5 | 21,8 | 16,8 | 20,8 | 44,7 | 32,0 | 27,0 |
| 21 | M31 x 1.0 | 37,0 | 25,1 | 17,1 | 21,7 | 49,2 | 33,6 | 30,5 |
| 23 | M34 x 1.0 | 40,0 | 28,2 | 17,7 | 22,0 | 51,7 | 35,1 | 31,5 |
| 25 | M37 x 1.0 | 43,5 | 31,4 | 18,4 | 22,9 | 53,2 | 36,6 | 28,5 |

TABLE 2

| ENTRY SIZE | ØG MIN | ØH MAX |
|---|---|---|
| 03 | 4,7 | 13,1 |
| 04 | 6,3 | 13,1 |
| 05 | 7,9 | 13,1 |
| 06 | 9,5 | 17,9 |
| 07 | 11,1 | 17,9 |
| 08 | 12,7 | 17,9 |
| 09 | 14,2 | 17,9 |
| 10 | 15,8 | 24,2 |
| 11 | 17,4 | 24,2 |
| 12 | 19,0 | 24,2 |
| 13 | 20,6 | 24,2 |
| 14 | 22,2 | 30,6 |
| 15 | 23,8 | 30,6 |
| 16 | 25,4 | 30,6 |
| 17 | 27,0 | 30,6 |
| 18 | 28,6 | 37,4 |
| 19 | 30,2 | 37,4 |
| 20 | 31,8 | 37,4 |
| 21 | 33,3 | 37,4 |
| 22 | 35,0 | 44,0 |
| 23 | 36,5 | 44,0 |
| 24 | 38,1 | 44,0 |

TABLE 3

| CODE | FINISH |
|---|---|
| C | ELECTROLESS NICKEL |
| B | CADMIUM OLIVE DRAB OVER ELECTROLESS NICKEL |
| ZB | ZINC COBALT OLIVE DRAB OVER ELECTROLESS NICKEL |
| ZN | ZINC NICKEL BLACK PASSIVATE OVER ELECTROLESS NICKEL |

LIST NOT EXHAUSTIVE, SEE PLATING TABLE FOR OTHER OPTIONS

70H1-17-08-1-C-N

SERIES
CONNECTOR INTERFACE
ANGLE
SHELL SIZE (TABLE 1)
ENTRY SIZE (TABLE 2)
MATERIAL
ALUMINIUM ALLOY
FINISH (TABLE 3)
NICKEL PLATED BRAID TAIL
OMIT FOR STANDARD (TINNED COPPER)

**For tooling and assembly instructions see www.polamco.com**

Backshell supplied pre-terminated with "Magna-Form" ring and braid tail, which is attached to cable braid
Sealing and strain relief achieved with Heat Shrink Boot (see page 354)
Adhesive if required for assembly (see page 352)
Screenbraid for EMC/RFI screening (see page 350)

DRAWING NOT TO SCALE, DIMENSIONS IN MM

SEE PAGES 18-26 FOR COMPLETE LIST OF AVAILABLE MATERIALS, FINISHES AND CONNECTOR INTERFACES
(DIMENSIONS, FORM AND O RING SUBJECT TO CHANGE DEPENDING ON BACKSHELL MATERIAL AND CONNECTOR INTERFACE)

THIS DRAWING IS THE PROPERTY OF POLAMCO LTD AND MUST NOT BE USED FOR
COMMERCIAL PURPOSES WITHOUT WRITTEN CONSENT OF THE COMPANY

# 70 (SS) - Braid Tail Backshell Stainless Steel

## Interface H - MIL-DTL-38999 SERIES III & IV

Polamco

**Interconnect Solutions Worldwide**

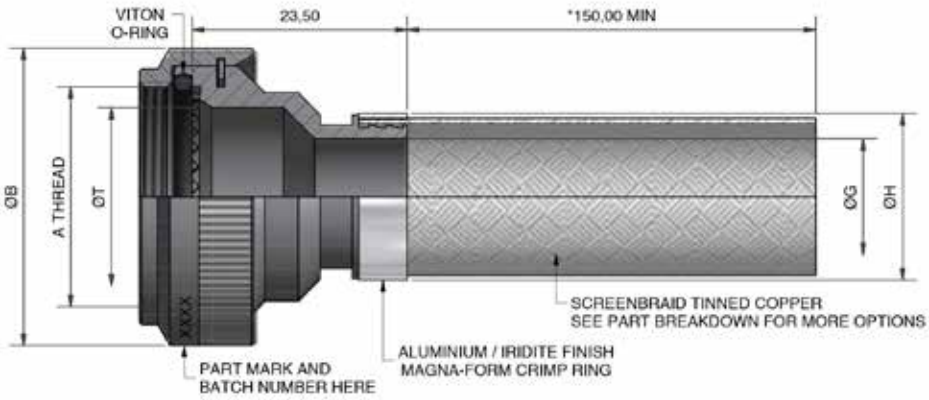


ANGLE 1

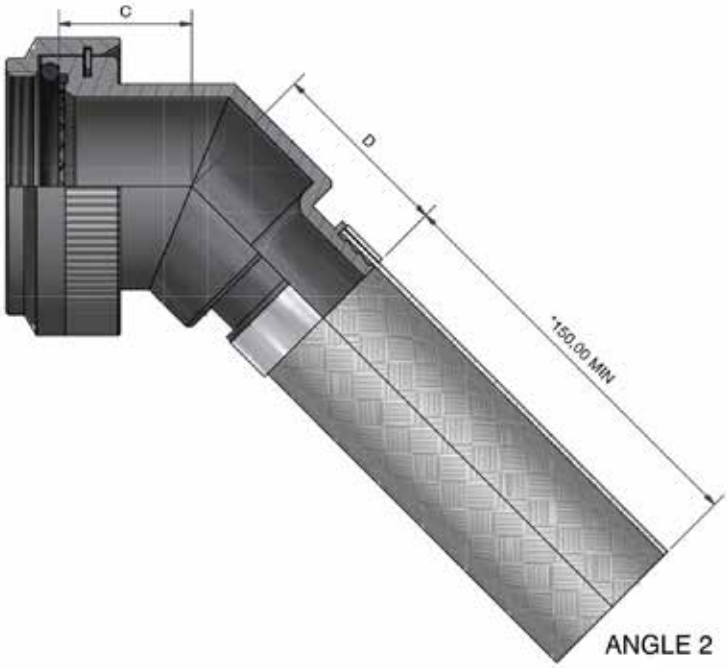


ANGLE 2

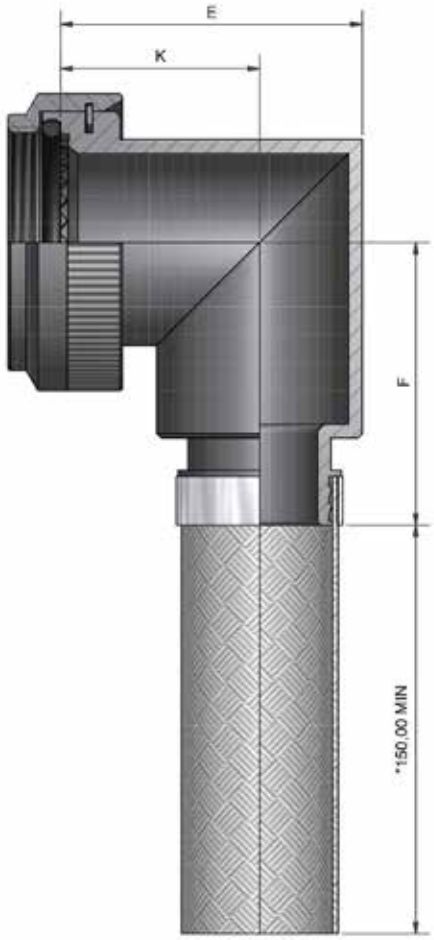


ANGLE 3

DRAWING NOT TO SCALE, DIMENSIONS IN MM

SEE PAGES 18-26 FOR COMPLETE LIST OF AVAILABLE MATERIALS, FINISHES AND CONNECTOR INTERFACES
(DIMENSIONS, FORM AND O RING SUBJECT TO CHANGE DEPENDING ON BACKSHELL MATERIAL AND CONNECTOR INTERFACE)





THIS DRAWING IS THE PROPERTY OF POLAMCO LTD AND MUST NOT BE USED FOR COMMERCIAL PURPOSES WITHOUT WRITTEN CONSENT OF THE COMPANY

# 70 (SS) - Braid Tail Backshell Stainless Steel

## Interface H - MIL-DTL-38999 SERIES III & IV

Polamco

**Interconnect Solutions Worldwide**

TABLE 1

| SHELL SIZE | A THREAD | ØB MAX | ØT MIN | C MAX | D ±0,5 | E MAX | F MAX | K ±0,5 |
|---|---|---|---|---|---|---|---|---|
| 09 | M12 x 1.0 | 18,0 | 6,7 | 13,1 | 17,1 | 21,4 | 24,0 | 16,3 |
| 11 | M15 x 1.0 | 21,0 | 10,2 | 13,9 | 18,2 | 24,5 | 25,7 | 17,2 |
| 13 | M18 x 1.0 | 24,5 | 13,5 | 14,5 | 18,6 | 28,5 | 27,2 | 19,4 |
| 15 | M22 x 1.0 | 29,0 | 16,2 | 15,5 | 19,5 | 31,3 | 28,7 | 21,0 |
| 17 | M25 x 1.0 | 32,5 | 19,4 | 16,1 | 20,3 | 34,4 | 30,4 | 22,8 |
| 19 | M28 x 1.0 | 35,5 | 21,8 | 16,8 | 20,8 | 38,7 | 32,0 | 25,3 |
| 21 | M31 x 1.0 | 37,0 | 25,1 | 17,1 | 21,7 | 40,9 | 33,6 | 26,1 |
| 23 | M34 x 1.0 | 40,0 | 28,2 | 17,7 | 22,0 | 43,9 | 35,1 | 27,6 |
| 25 | M37 x 1.0 | 43,5 | 31,4 | 18,4 | 22,9 | 46,6 | 36,6 | 29,1 |

TABLE 2

| ENTRY SIZE | ØG MIN | ØH MAX |
|---|---|---|
| 03 | 4,7 | 13,1 |
| 04 | 6,3 | 13,1 |
| 05 | 7,9 | 13,1 |
| 06 | 9,5 | 17,9 |
| 07 | 11,1 | 17,9 |
| 08 | 12,7 | 17,9 |
| 09 | 14,2 | 17,9 |
| 10 | 15,8 | 24,2 |
| 11 | 17,4 | 24,2 |
| 12 | 19,0 | 24,2 |
| 13 | 20,6 | 24,2 |
| 14 | 22,2 | 30,6 |
| 15 | 23,8 | 30,6 |
| 16 | 25,4 | 30,6 |
| 17 | 27,0 | 30,6 |
| 18 | 28,6 | 37,4 |
| 19 | 30,2 | 37,4 |
| 20 | 31,8 | 37,4 |
| 21 | 33,3 | 37,4 |
| 22 | 35,0 | 44,0 |
| 23 | 36,5 | 44,0 |
| 24 | 38,1 | 44,0 |

TABLE 3

| CODE | MATERIAL / FINISH |
|---|---|
| 4-J | STAINLESS STEEL 303S31 / PASSIVATE |
| 46-J | STAINLESS STEEL 316 / PASSIVATE |

LIST NOT EXHAUSTIVE, SEE PLATING TABLE FOR OTHER OPTIONS

70H1-17-08-4-J-N

- SERIES
- CONNECTOR INTERFACE
- ANGLE
- SHELL SIZE (TABLE 1)
- ENTRY SIZE (TABLE 2)
- MATERIAL (TABLE 1)
- FINISH (TABLE 1)
- NICKEL PLATED BRAID TAIL
  OMIT FOR STANDARD (TINNED COPPER)

BRAID TAIL

**For tooling and assembly instructions see www.polamco.com**

Backshell supplied pre-terminated with “Magna-Form” ring and braid tail, which is attached to cable braid
Sealing and strain relief achieved with Heat Shrink Boot (see page 354)
Adhesive if required for assembly (see page 352)
Screenbraid for EMC/RFI screening (see page 350)

DRAWING NOT TO SCALE, DIMENSIONS IN MM

SEE PAGES 18-26 FOR COMPLETE LIST OF AVAILABLE MATERIALS, FINISHES AND CONNECTOR INTERFACES
(DIMENSIONS, FORM AND O RING SUBJECT TO CHANGE DEPENDING ON BACKSHELL MATERIAL AND CONNECTOR INTERFACE)

THIS DRAWING IS THE PROPERTY OF POLAMCO LTD AND MUST NOT BE USED FOR COMMERCIAL PURPOSES WITHOUT WRITTEN CONSENT OF THE COMPANY

# 70 (NB) - Braid Tail Backshell
# Nickel Aluminium Bronze
## Interface H - MIL-DTL-38999 SERIES III & IV

Polamco

**Interconnect Solutions Worldwide**

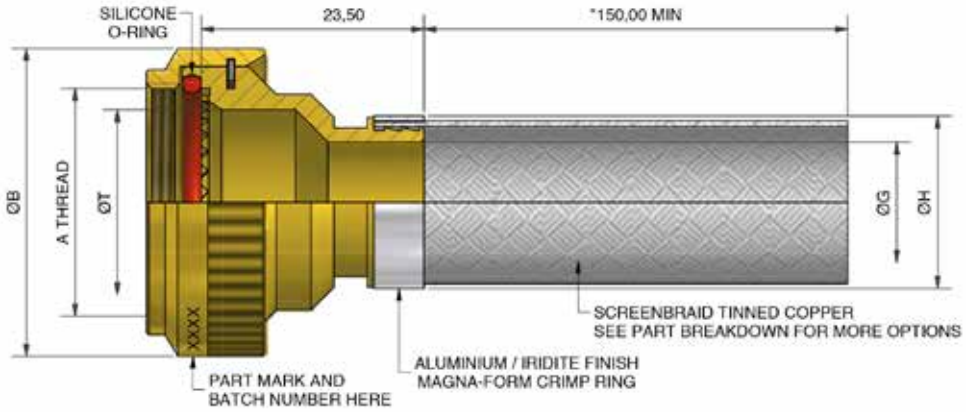


ANGLE 1

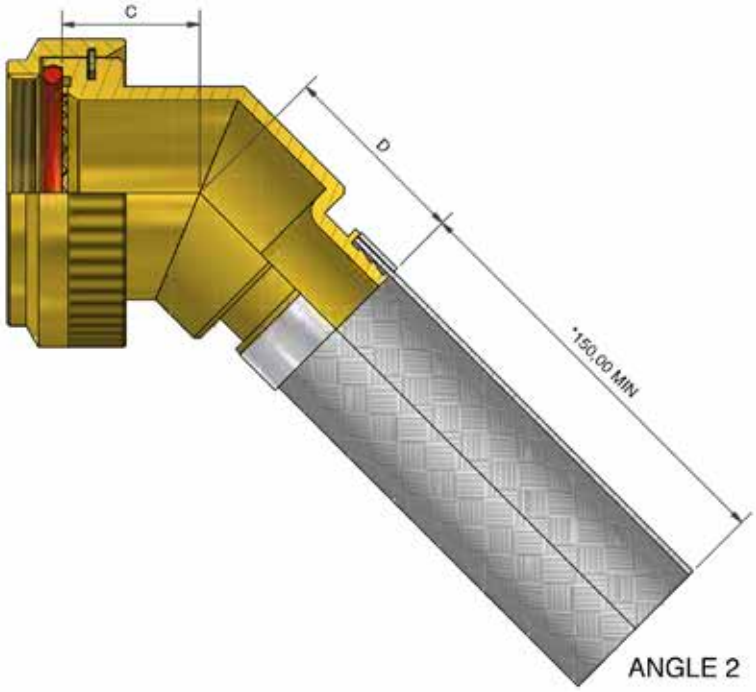


ANGLE 2

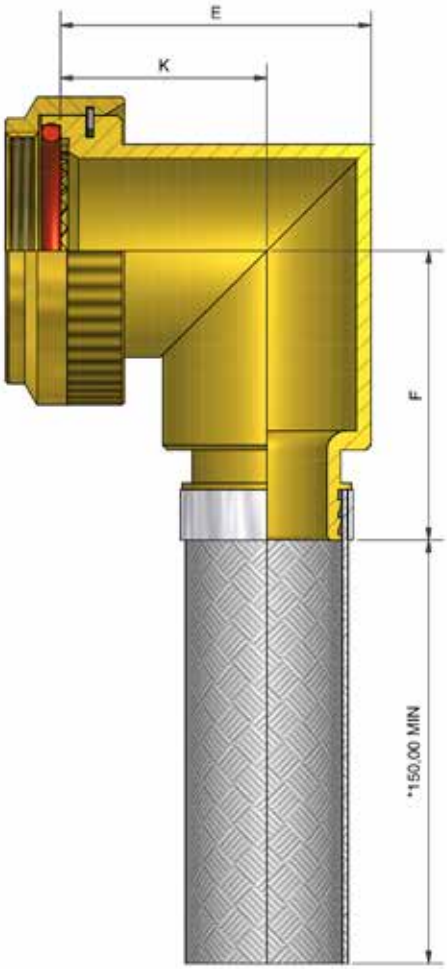


ANGLE 3

DRAWING NOT TO SCALE, DIMENSIONS IN MM

SEE PAGES 18-26 FOR COMPLETE LIST OF AVAILABLE MATERIALS, FINISHES AND CONNECTOR INTERFACES
(DIMENSIONS, FORM AND O RING SUBJECT TO CHANGE DEPENDING ON BACKSHELL MATERIAL AND CONNECTOR INTERFACE)





THIS DRAWING IS THE PROPERTY OF POLAMCO LTD AND MUST NOT BE USED FOR COMMERCIAL PURPOSES WITHOUT WRITTEN CONSENT OF THE COMPANY

# 70 (NB) - Braid Tail Backshell
# Nickel Aluminium Bronze
## Interface H - MIL-DTL-38999 SERIES III & IV

Polamco

**Interconnect Solutions Worldwide**

TABLE 1

| SHELL SIZE | A THREAD | ØB MAX | ØT MIN | C MAX | D MAX | E MAX | F MAX | K ±0,5 |
|---|---|---|---|---|---|---|---|---|
| 09 | M12 x 1.0 | 18,0 | 6,7 | 13,1 | 17,1 | 21,4 | 24,0 | 16,3 |
| 11 | M15 x 1.0 | 21,0 | 10,2 | 13,9 | 18,2 | 24,5 | 25,7 | 17,2 |
| 13 | M18 x 1.0 | 24,5 | 13,5 | 14,5 | 18,6 | 28,5 | 27,2 | 19,4 |
| 15 | M22 x 1.0 | 29,0 | 16,2 | 15,5 | 19,5 | 31,3 | 28,7 | 21,0 |
| 17 | M25 x 1.0 | 32,5 | 19,4 | 16,1 | 20,3 | 34,4 | 30,4 | 22,8 |
| 19 | M28 x 1.0 | 35,5 | 21,8 | 16,8 | 20,8 | 38,7 | 32,0 | 25,3 |
| 21 | M31 x 1.0 | 37,0 | 25,1 | 17,1 | 21,7 | 40,9 | 33,6 | 26,1 |
| 23 | M34 x 1.0 | 40,0 | 28,2 | 17,7 | 22,0 | 43,9 | 35,1 | 27,6 |
| 25 | M37 x 1.0 | 43,5 | 31,4 | 18,4 | 22,9 | 46,6 | 36,6 | 29,1 |

TABLE 2

| ENTRY SIZE | ØG MIN | ØH MAX |
|---|---|---|
| 03 | 4,7 | 13,1 |
| 04 | 6,3 | 13,1 |
| 05 | 7,9 | 13,1 |
| 06 | 9,5 | 17,9 |
| 07 | 11,1 | 17,9 |
| 08 | 12,7 | 17,9 |
| 09 | 14,2 | 17,9 |
| 10 | 15,8 | 24,2 |
| 11 | 17,4 | 24,2 |
| 12 | 19,0 | 24,2 |
| 13 | 20,6 | 24,2 |
| 14 | 22,2 | 30,6 |
| 15 | 23,8 | 30,6 |
| 16 | 25,4 | 30,6 |
| 17 | 27,0 | 30,6 |
| 18 | 28,6 | 37,4 |
| 19 | 30,2 | 37,4 |
| 20 | 31,8 | 37,4 |
| 21 | 33,3 | 37,4 |
| 22 | 35,0 | 44,0 |
| 23 | 36,5 | 44,0 |
| 24 | 38,1 | 44,0 |

70H1-17-08-2-Z-N

- SERIES
- CONNECTOR INTERFACE
- ANGLE
- SHELL SIZE (TABLE 1)
- ENTRY SIZE (TABLE 2)
- MATERIAL
  - NICKEL ALUMINIUM BRONZE
- FINISH
  - SHOT BLAST
- NICKEL PLATED BRAID TAIL
  - OMIT FOR STANDARD (TINNED COPPER)

**For tooling and assembly instructions see www.polamco.com**

Backshell supplied pre-terminated with “Magna-Form” ring and braid tail, which is attached to cable braid
Sealing and strain relief achieved with Heat Shrink Boot (see page 354)
Adhesive if required for assembly (see page 352)
Screenbraid for EMC/RFI screening (see page 350)

DRAWING NOT TO SCALE, DIMENSIONS IN MM

SEE PAGES 18-26 FOR COMPLETE LIST OF AVAILABLE MATERIALS, FINISHES AND CONNECTOR INTERFACES
(DIMENSIONS, FORM AND O RING SUBJECT TO CHANGE DEPENDING ON BACKSHELL MATERIAL AND CONNECTOR INTERFACE)

THIS DRAWING IS THE PROPERTY OF POLAMCO LTD AND MUST NOT BE USED FOR
COMMERCIAL PURPOSES WITHOUT WRITTEN CONSENT OF THE COMPANY

# KMAF - Mesh Tape Termination

## Interface F - MIL-DTL-38999 SERIES I

MANUFACTURED UNDER LICENCE
'AGUSTAWESTLAND HELICOPTERS UK PATENT 2239358'

Polamco

**Interconnect Solutions Worldwide**

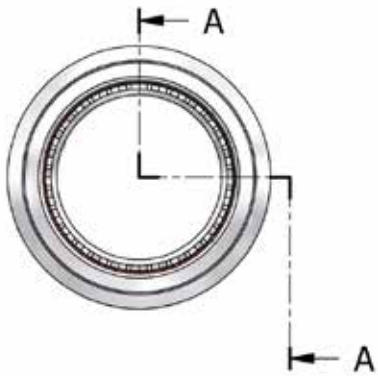


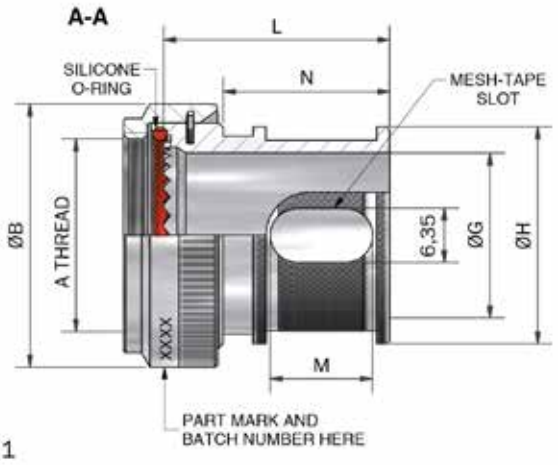


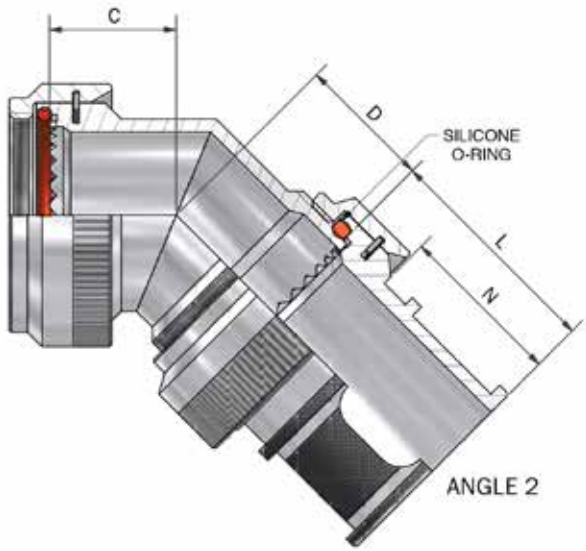


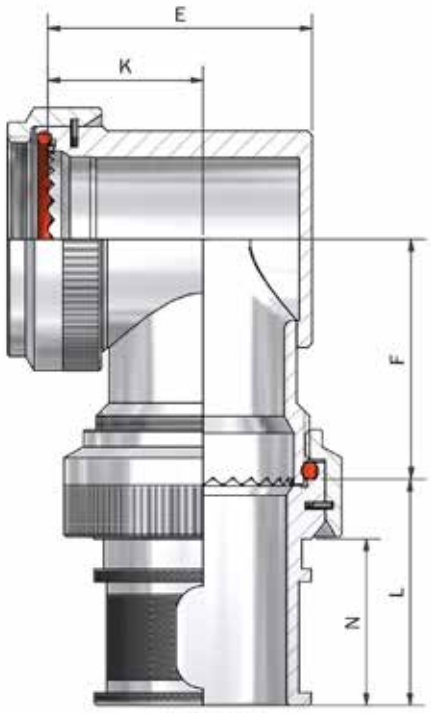


DRAWING NOT TO SCALE, DIMENSIONS IN MM

SEE PAGES 18-26 FOR COMPLETE LIST OF AVAILABLE MATERIALS, FINISHES AND CONNECTOR INTERFACES
(DIMENSIONS, FORM AND O RING SUBJECT TO CHANGE DEPENDING ON BACKSHELL MATERIAL AND CONNECTOR INTERFACE)





THIS DRAWING IS THE PROPERTY OF POLAMCO LTD AND MUST NOT BE USED FOR COMMERCIAL PURPOSES WITHOUT WRITTEN CONSENT OF THE COMPANY

# KMAF - Mesh Tape Termination

## Interface F - MIL-DTL-38999 SERIES I

MANUFACTURED UNDER LICENCE

'AGUSTAWESTLAND HELICOPTERS UK PATENT 2239358'

Polamco

**Interconnect Solutions Worldwide**

TABLE 1

| SHELL SIZE | A THREAD | ØB MAX | C MAX | D MAX | E MAX | F MAX | K ±0,5 | ØG MIN | ØH MAX |
|---|---|---|---|---|---|---|---|---|---|
| 09 | 7/16-28 UNEF | 18,0 | 12,5 | 14,5 | 20,0 | 21,5 | 13.7 | 6,8 | 13,2 |
| 11 | 9/16-24 UNEF | 21,0 | 13,0 | 15,0 | 23,0 | 23,0 | 14.7 | 10,2 | 16,7 |
| 13 | 11/16-24 UNEF | 24,5 | 13,6 | 15,5 | 27,0 | 24,5 | 17.2 | 13,1 | 20,0 |
| 15 | 13/16-20 UNEF | 27,8 | 14,0 | 16,0 | 28,0 | 28,5 | 16.7 | 16,2 | 22,7 |
| 17 | 15/16-20 UNEF | 30,8 | 15,0 | 17,0 | 31,0 | 30,0 | 18.2 | 19,3 | 25,4 |
| 19 | 1 1/16-18 UNEF | 34,1 | 16,0 | 18,0 | 36,0 | 31,5 | 21.2 | 22,3 | 28,3 |
| 21 | 1 3/16-18 UNEF | 37,3 | 16,6 | 18,5 | 39,0 | 33,0 | 22.2 | 25,8 | 31,6 |
| 23 | 1 5/16-18 UNEF | 41,0 | 17,0 | 19,0 | 41,0 | 34,5 | 23.2 | 28,3 | 34,7 |
| 25 | 1 7/16-18 UNEF | 43,7 | 17,4 | 19,5 | 47,0 | 36,0 | 27.7 | 31,5 | 37,9 |

TABLE 2

| SLOT OPTION | L ±0,5 | M ±0,2 | N ±0,2 | MESH-TAPE PART NUMBER (ORDERED SEPARATELY - 25 M REEL) |
|---|---|---|---|---|
| S1 | 26,5 | 12,0 | 19,5 | KM (6) |
| S2 | 34,5 | 20,0 | 27,5 | KM (13) |

TABLE 3

| CODE | FINISH |
|---|---|
| C | ELECTROLESS NICKEL |
| B | CADMIUM OLIVE DRAB OVER ELECTROLESS NICKEL |
| ZB | ZINC COBALT OLIVE DRAB OVER ELECTROLESS NICKEL |
| ZN | ZINC NICKEL BLACK PASSIVATE OVER ELECTROLESS NICKEL |

LIST NOT EXHAUSTIVE, SEE PLATING TABLE FOR OTHER OPTIONS

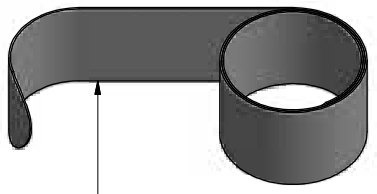

CONSTANT FORCE SPRING (HE)

KMAF1-17-1-C-S1-HE

- SERIES
- CONNECTOR INTERFACE
- ANGLE
- SHELL SIZE (TABLE 1)
- MATERIAL
  - ALUMINIUM ALLOY
- FINISH (TABLE 3)
- TERMINATION OPTION
  - HE - CONSTANT FORCE SPRING
  - OMIT FOR SUPPLIED WITHOUT SPRING

MESH TAPE

**For tooling and assembly instructions see www.polamco.com**

Backshell supplied with Spring if specified in the part number
Band can be ordered separately (see page 349)
Supplied without mesh tape, which needs to be ordered separately (see page 184)
Sealing and strain relief achieved with Heat Shrink Boot (see page 354)
Adhesive if required for assembly (see page 352)
Screenbraid for EMC/RFI screening (see page 350)

DRAWING NOT TO SCALE, DIMENSIONS IN MM

SEE PAGES 18-26 FOR COMPLETE LIST OF AVAILABLE MATERIALS, FINISHES AND CONNECTOR INTERFACES
(DIMENSIONS, FORM AND O RING SUBJECT TO CHANGE DEPENDING ON BACKSHELL MATERIAL AND CONNECTOR INTERFACE)

THIS DRAWING IS THE PROPERTY OF POLAMCO LTD AND MUST NOT BE USED FOR COMMERCIAL PURPOSES WITHOUT WRITTEN CONSENT OF THE COMPANY

# KMAF - Mesh Tape Termination

## Interface F - MIL-DTL-38999 SERIES II

MANUFACTURED UNDER LICENCE
'AGUSTAWESTLAND HELICOPTERS UK PATENT 2239358'

Polamco

**Interconnect Solutions Worldwide**

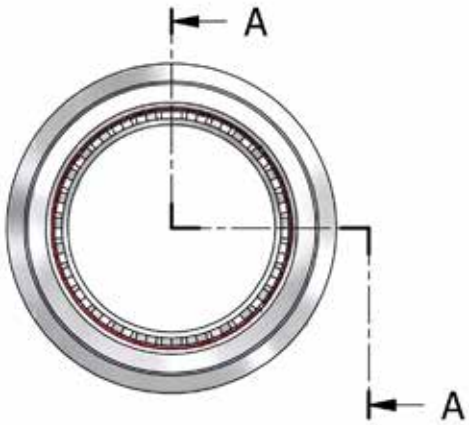


ANGLE 1

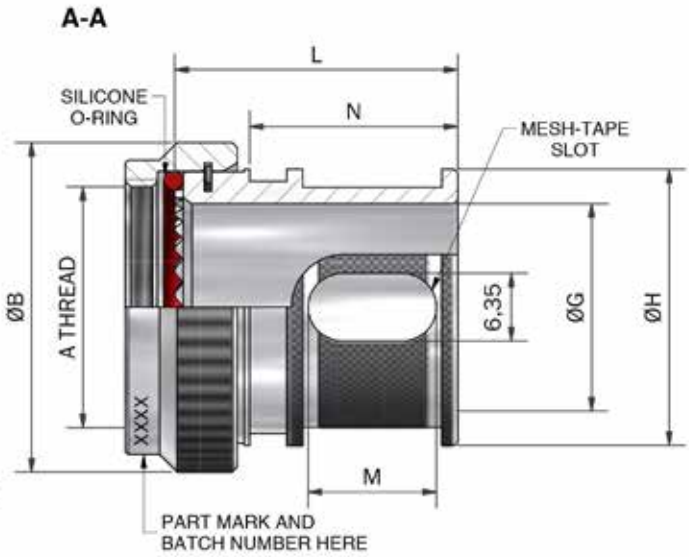


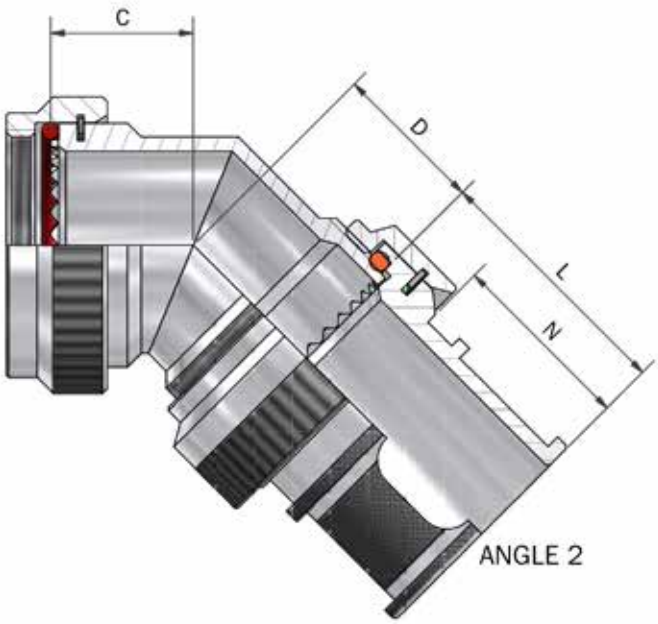


ANGLE 2

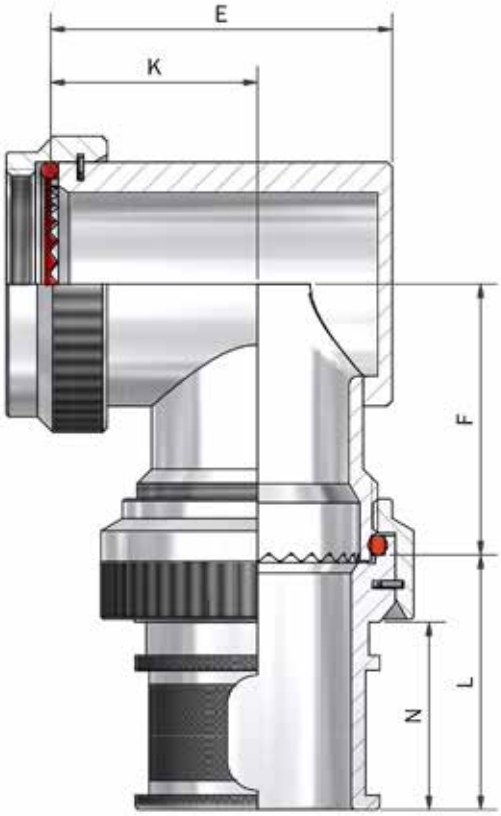


ANGLE 3

DRAWING NOT TO SCALE, DIMENSIONS IN MM

SEE PAGES 18-26 FOR COMPLETE LIST OF AVAILABLE MATERIALS, FINISHES AND CONNECTOR INTERFACES
(DIMENSIONS, FORM AND O RING SUBJECT TO CHANGE DEPENDING ON BACKSHELL MATERIAL AND CONNECTOR INTERFACE)





THIS DRAWING IS THE PROPERTY OF POLAMCO LTD AND MUST NOT BE USED FOR COMMERCIAL PURPOSES WITHOUT WRITTEN CONSENT OF THE COMPANY

# KMAF - Mesh Tape Termination

## Interface F - MIL-DTL-38999 SERIES II

MANUFACTURED UNDER LICENCE

'AGUSTAWESTLAND HELICOPTERS UK PATENT 2239358'

Polamco

**Interconnect Solutions Worldwide**

TABLE 1

| SHELL SIZE | A THREAD | ØB MAX | C MAX | D MAX | E MAX | F MAX | K ±0,5 | ØG MIN | ØH MAX |
|---|---|---|---|---|---|---|---|---|---|
| 08 | 7/16-28 UNEF | 18,3 | 12,5 | 14,5 | 23,0 | 21,5 | 13.7 | 6,6 | 13,2 |
| 10 | 9/16-24 UNEF | 21,5 | 13,0 | 15,0 | 26,5 | 23,0 | 14.7 | 10,1 | 16,7 |
| 12 | 11/16-24 UNEF | 24,5 | 13,6 | 15,5 | 29,5 | 24,5 | 17.2 | 12,9 | 20,0 |
| 14 | 13/16-20 UNEF | 27,8 | 14,0 | 16,0 | 32,5 | 28,5 | 16.7 | 16,1 | 22,7 |
| 16 | 15/16-20 UNEF | 30,8 | 15,0 | 17,0 | 36,0 | 30,0 | 18.2 | 19,3 | 25,4 |
| 18 | 1 1/16-18 UNEF | 34,1 | 16,0 | 18,0 | 40,0 | 31,5 | 21.2 | 21,7 | 28,3 |
| 20 | 1 3/16-18 UNEF | 37,3 | 16,6 | 18,5 | 42,5 | 33,0 | 22.2 | 24,9 | 31,6 |
| 22 | 1 5/16-18 UNEF | 40,5 | 17,0 | 19,0 | 45,5 | 34,5 | 23.2 | 28,1 | 34,7 |
| 24 | 1 7/16-18 UNEF | 43,7 | 17,4 | 19,5 | 48,5 | 36,0 | 27.7 | 31,3 | 37,9 |

TABLE 2

| SLOT OPTION | L ±0,5 | M ±0,2 | N ±0,2 | MESH-TAPE PART NUMBER (ORDERED SEPARATELY - 25 M REEL) |
|---|---|---|---|---|
| S1 | 26,5 | 12,0 | 19,5 | KM (6) |
| S2 | 34,5 | 20,0 | 27,5 | KM (13) |

TABLE 3

| CODE | FINISH |
|---|---|
| C | ELECTROLESS NICKEL |
| B | CADMIUM OLIVE DRAB OVER ELECTROLESS NICKEL |
| ZB | ZINC COBALT OLIVE DRAB OVER ELECTROLESS NICKEL |
| ZN | ZINC NICKEL BLACK PASSIVATE OVER ELECTROLESS NICKEL |

LIST NOT EXHAUSTIVE, SEE PLATING TABLE FOR OTHER OPTIONS

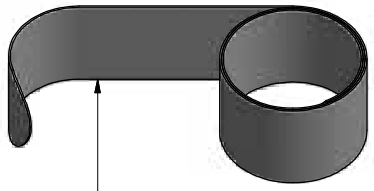

CONSTANT FORCE SPRING (HE)

KMAF1-16-1-C-S1-HE

- SERIES
- CONNECTOR INTERFACE
- ANGLE
- SHELL SIZE (TABLE 1)
- MATERIAL
  - ALUMINIUM ALLOY
- FINISH (TABLE 3)
- SLOT OPTION (TABLE 2)
- TERMINATION OPTION
  - HE - CONSTANT FORCE SPRING
  - OMIT FOR SUPPLIED WITHOUT SPRING

**For tooling and assembly instructions see www.polamco.com**

Backshell supplied with Spring if specified in the part number
Band can be ordered separately (see page 349)
Supplied without mesh tape, which needs to be ordered separately (see page 184)
Sealing and strain relief achieved with Heat Shrink Boot (see page 354)
Adhesive if required for assembly (see page 352)
Screenbraid for EMC/RFI screening (see page 350)

DRAWING NOT TO SCALE, DIMENSIONS IN MM

SEE PAGES 18-26 FOR COMPLETE LIST OF AVAILABLE MATERIALS, FINISHES AND CONNECTOR INTERFACES
(DIMENSIONS, FORM AND O RING SUBJECT TO CHANGE DEPENDING ON BACKSHELL MATERIAL AND CONNECTOR INTERFACE)

THIS DRAWING IS THE PROPERTY OF POLAMCO LTD AND MUST NOT BE USED FOR COMMERCIAL PURPOSES WITHOUT WRITTEN CONSENT OF THE COMPANY

# KMAH - Mesh Tape Termination

## Interface H - MIL-DTL-38999 SERIES III & IV

MANUFACTURED UNDER LICENCE
'AGUSTAWESTLAND HELICOPTERS UK PATENT 2239358'

Polamco

**Interconnect Solutions Worldwide**

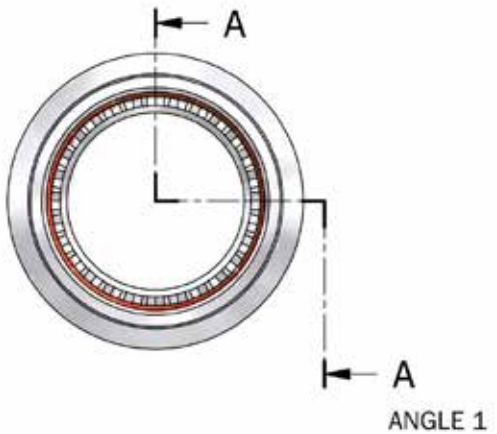


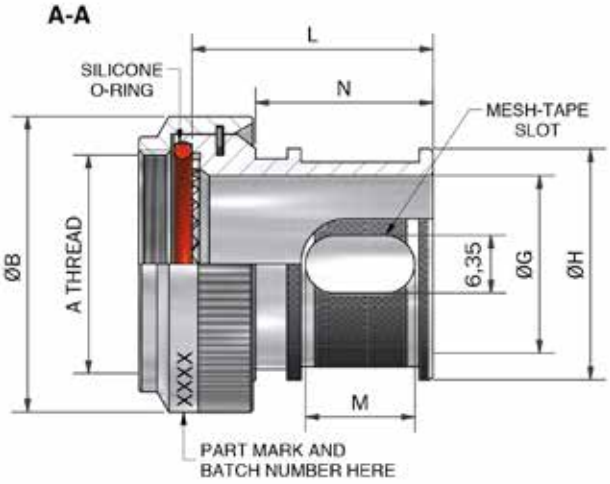


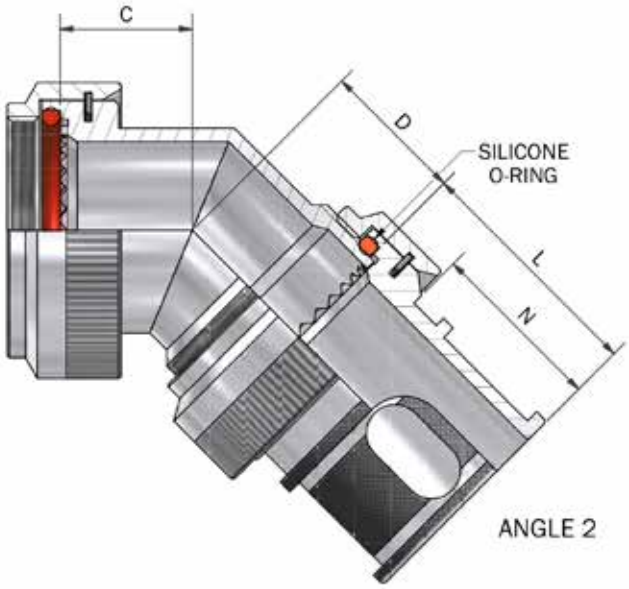


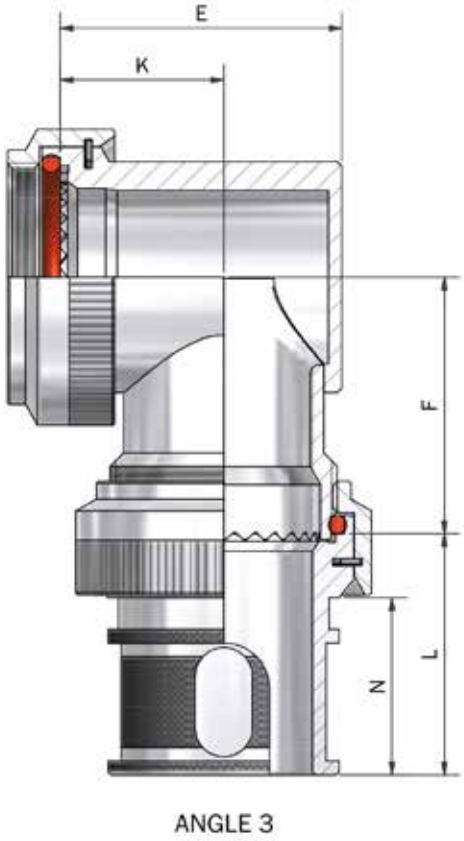


DRAWING NOT TO SCALE, DIMENSIONS IN MM

SEE PAGES 18-26 FOR COMPLETE LIST OF AVAILABLE MATERIALS, FINISHES AND CONNECTOR INTERFACES
(DIMENSIONS, FORM AND O RING SUBJECT TO CHANGE DEPENDING ON BACKSHELL MATERIAL AND CONNECTOR INTERFACE)





THIS DRAWING IS THE PROPERTY OF POLAMCO LTD AND MUST NOT BE USED FOR COMMERCIAL PURPOSES WITHOUT WRITTEN CONSENT OF THE COMPANY

# KMAH - Mesh Tape Termination

## Interface H - MIL-DTL-38999 SERIES III & IV

MANUFACTURED UNDER LICENCE
'AGUSTAWESTLAND HELICOPTERS UK PATENT 2239358'

Polamco

**Interconnect Solutions Worldwide**

TABLE 1

| SHELL SIZE | A THREAD | ØB MAX | C MAX | D MAX | E MAX | F MAX | K ±0,5 | ØG MIN | ØH MAX |
|---|---|---|---|---|---|---|---|---|---|
| 09 | M12 x 1.0 | 18,0 | 12,5 | 14,5 | 20,0 | 21,5 | 13,5 | 6,8 | 13,2 |
| 11 | M15 x 1.0 | 21,0 | 13,0 | 15,0 | 23,0 | 23,0 | 14,5 | 10,3 | 16,7 |
| 13 | M18 x 1.0 | 24,5 | 13,6 | 15,5 | 27,0 | 24,5 | 17,0 | 13,6 | 20,0 |
| 15 | M22 x 1.0 | 29,0 | 14,0 | 16,0 | 28,0 | 28,5 | 16,5 | 16,3 | 22,7 |
| 17 | M25 x 1.0 | 32,5 | 15,0 | 17,0 | 31,0 | 30,0 | 18,0 | 19,5 | 25,4 |
| 19 | M28 x 1.0 | 35,5 | 16,0 | 18,0 | 36,0 | 31,5 | 21,0 | 21,9 | 28,3 |
| 21 | M31 x 1.0 | 37,0 | 16,6 | 18,5 | 39,0 | 33,0 | 22,0 | 25,2 | 31,6 |
| 23 | M34 x 1.0 | 40,0 | 17,0 | 19,0 | 41,0 | 34,5 | 23,0 | 28,3 | 34,7 |
| 25 | M37 x 1.0 | 43,5 | 17,4 | 19,5 | 47,0 | 36,0 | 27,5 | 31,5 | 37,9 |

TABLE 2

| SLOT OPTION | L ±0,5 | M ±0,2 | N ±0,2 | MESH-TAPE PART NUMBER (ORDERED SEPARATELY- 25 M REEL) |
|---|---|---|---|---|
| S1 | 26,5 | 12,0 | 19,5 | KM (6) |
| S2 | 34,5 | 20,0 | 27,5 | KM (13) |

TABLE 3

| CODE | FINISH |
|---|---|
| C | ELECTROLESS NICKEL |
| B | CADMIUM OLIVE DRAB OVER ELECTROLESS NICKEL |
| ZB | ZINC COBALT OLIVE DRAB OVER ELECTROLESS NICKEL |
| ZN | ZINC NICKEL BLACK PASSIVATE OVER ELECTROLESS NICKEL |

LIST NOT EXHAUSTIVE, SEE PLATING TABLE FOR OTHER OPTIONS

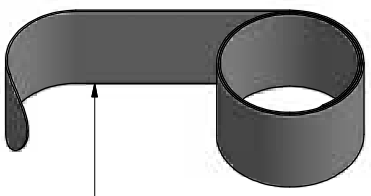

CONSTANT FORCE SPRING (HE)

KMAH1-17-1-C-S1-HE

- SERIES
- CONNECTOR INTERFACE
- ANGLE
- SHELL SIZE (TABLE 1)
- MATERIAL
  - ALUMINIUM ALLOY
- FINISH (TABLE 3)
- SLOT OPTION (TABLE 2)
- TERMINATION OPTION
  - HE - CONSTANT FORCE SPRING
  - OMIT FOR SUPPLIED WITHOUT SPRING

**For tooling and assembly instructions see www.polamco.com**

Backshell supplied with Spring if specified in the part number
Band can be ordered separately (see page 349)
Supplied without mesh tape, which needs to be ordered separately (see page 184)
Sealing and strain relief achieved with Heat Shrink Boot (see page 354)
Adhesive if required for assembly (see page 352)
Screenbraid for EMC/RFI screening (see page 350)

DRAWING NOT TO SCALE, DIMENSIONS IN MM

SEE PAGES 18-26 FOR COMPLETE LIST OF AVAILABLE MATERIALS, FINISHES AND CONNECTOR INTERFACES
(DIMENSIONS, FORM AND O RING SUBJECT TO CHANGE DEPENDING ON BACKSHELL MATERIAL AND CONNECTOR INTERFACE)

THIS DRAWING IS THE PROPERTY OF POLAMCO LTD AND MUST NOT BE USED FOR COMMERCIAL PURPOSES WITHOUT WRITTEN CONSENT OF THE COMPANY

# KMAF (D) - Mesh Tape Termination Double Slot version

## Interface F - MIL-DTL-38999 SERIES I

MANUFACTURED UNDER LICENCE

'AGUSTAWESTLAND HELICOPTERS UK PATENT 2239358'

Polamco

**Interconnect Solutions Worldwide**

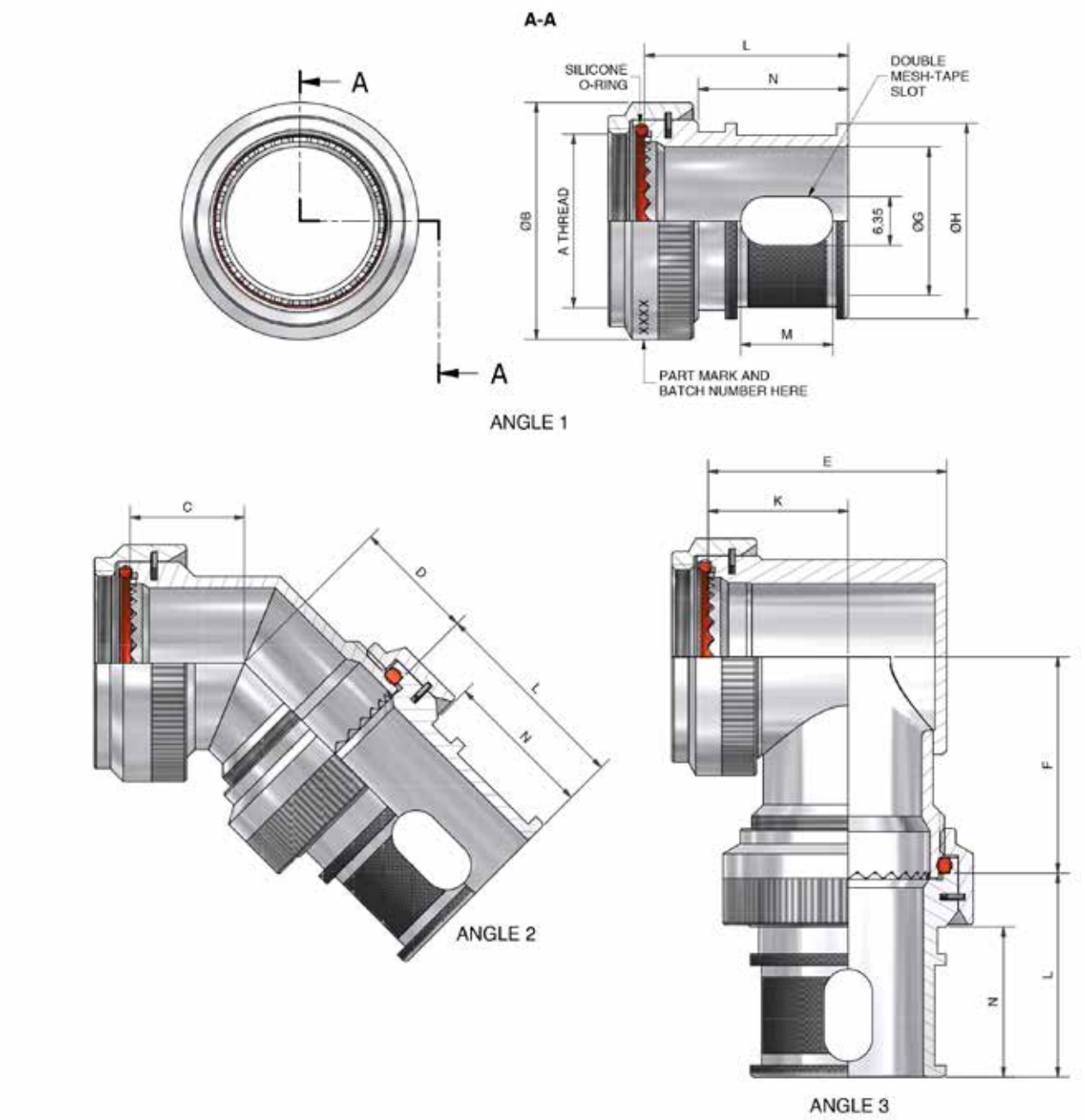


DRAWING NOT TO SCALE, DIMENSIONS IN MM

SEE PAGES 18-26 FOR COMPLETE LIST OF AVAILABLE MATERIALS, FINISHES AND CONNECTOR INTERFACES
(DIMENSIONS, FORM AND O RING SUBJECT TO CHANGE DEPENDING ON BACKSHELL MATERIAL AND CONNECTOR INTERFACE)





THIS DRAWING IS THE PROPERTY OF POLAMCO LTD AND MUST NOT BE USED FOR COMMERCIAL PURPOSES WITHOUT WRITTEN CONSENT OF THE COMPANY

# KMAF (D) - Mesh Tape Termination Double Slot version

## Interface F - MIL-DTL-38999 SERIES I

MANUFACTURED UNDER LICENCE

'AGUSTAWESTLAND HELICOPTERS UK PATENT 2239358'

Polamco

**Interconnect Solutions Worldwide**

TABLE 1

| SHELL SIZE | A THREAD | ØB MAX | ØG | ØH MAX | C MAX | D MAX | E MAX | F MAX | K ± 0,5 |
|---|---|---|---|---|---|---|---|---|---|
| 09 | 7/16-28UNEF | 18,0 | 6,7 | 13,2 | 12,5 | 14,5 | 20,0 | 21,5 | 13,7 |
| 11 | 9/16-24UNEF | 21,0 | 10,2 | 16,7 | 13,0 | 15,0 | 23,0 | 23,0 | 14,7 |
| 13 | 11/16-24UNEF | 24,5 | 13,0 | 19,5 | 13,6 | 15,5 | 24,5 | 24,5 | 17,2 |
| 15 | 13/16-20UNEF | 27,8 | 16,2 | 22,7 | 14,0 | 16,0 | 28,5 | 28,5 | 16,7 |
| 17 | 15/16-20UNEF | 30,8 | 19,4 | 25,4 | 15,0 | 17,0 | 30,0 | 30,0 | 18,2 |
| 19 | 1 1/16-18UNEF | 34,1 | 22,3 | 28,3 | 16,0 | 18,0 | 31,5 | 31,5 | 21,2 |
| 21 | 1 3/16-18UNEF | 37,3 | 25,8 | 31,6 | 16,6 | 18,5 | 33,0 | 33,0 | 22,2 |
| 23 | 1 5/16-18UNEF | 41,0 | 28,1 | 34,7 | 17,0 | 19,0 | 34,5 | 34,5 | [illegible] |
| 25 | 1 7/16-18UNEF | 43,7 | 31,4 | 37,9 | 17,4 | 19,5 | 36 | | |

TABLE 2

| DOUBLE SLOT OPTION | L ±0,5 | M ±0,2 | N ±0,2 | MESH-TAPE PART NUMBER (ORDERED SEPARATELY- 25 M REEL) |
|---|---|---|---|---|
| D1 | 26,5 | 12,0 | 19,5 | KM (6) |
| D2 | 34,5 | 20,0 | 27,5 | KM (13) |

TABLE 3

| CODE | FINISH |
|---|---|
| C | ELECTROLESS NICKEL |
| B | CADMIUM OLIVE DRAB OVER ELECTROLESS NICKEL |
| ZB | ZINC COBALT OLIVE DRAB OVER ELECTROLESS NICKEL |
| ZN | ZINC NICKEL BLACK PASSIVATE OVER ELECTROLESS NICKEL |

LIST NOT EXHAUSTIVE, SEE PLATING TABLE FOR OTHER OPTIONS

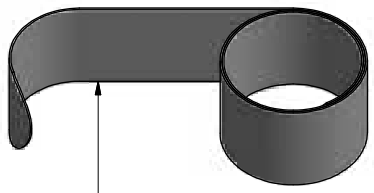

CONSTANT FORCE SPRING (HE)

KMAF1-17-1-C-D1-HE

- SERIES
- STYLE
- CONNECTOR INTERFACE
- ANGLE
- SHELL SIZE (TABLE 1)
- MATERIAL
  - ALUMINIUM ALLOY
- FINISH (TABLE 3)
- DOUBLE SLOT OPTION (TABLE 2)
- TERMINATION OPTION
  - HE - CONSTANT FORCE SPRING
  - OMIT FOR SUPPLIED WITHOUT SPRING

**For tooling and assembly instructions see www.polamco.com**

Backshell supplied with Spring if specified in the part number
Band can be ordered separately (see page 349)
Supplied without mesh tape, which needs to be ordered separately (see page 184)
Sealing and strain relief achieved with Heat Shrink Boot (see page 354)
Adhesive if required for assembly (see page 352)
Screenbraid for EMC/RFI screening (see page 350)

DRAWING NOT TO SCALE, DIMENSIONS IN MM

SEE PAGES 18-26 FOR COMPLETE LIST OF AVAILABLE MATERIALS, FINISHES AND CONNECTOR INTERFACES
(DIMENSIONS, FORM AND O RING SUBJECT TO CHANGE DEPENDING ON BACKSHELL MATERIAL AND CONNECTOR INTERFACE)

THIS DRAWING IS THE PROPERTY OF POLAMCO LTD AND MUST NOT BE USED FOR COMMERCIAL PURPOSES WITHOUT WRITTEN CONSENT OF THE COMPANY

# KMAF (D) - Mesh Tape Termination Double Slot version

## Interface F - MIL-DTL-38999 SERIES II

MANUFACTURED UNDER LICENCE

'AGUSTAWESTLAND HELICOPTERS UK PATENT 2239358'

Polamco

**Interconnect Solutions Worldwide**

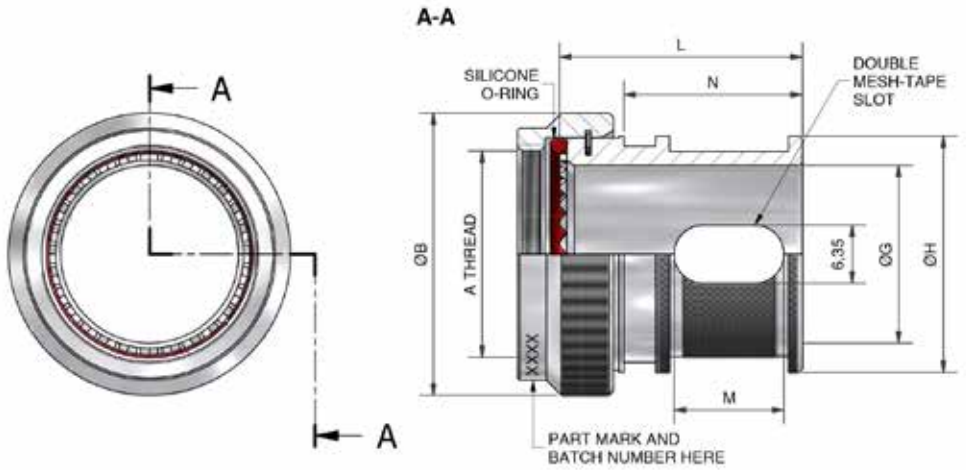


ANGLE 1

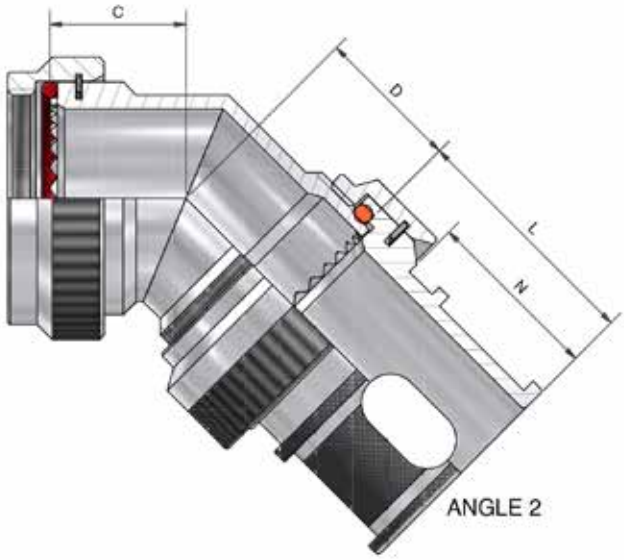


ANGLE 2

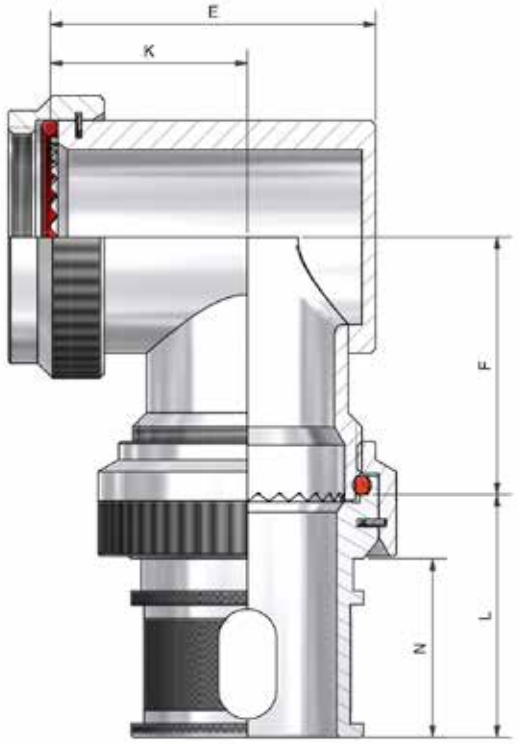


ANGLE 3

DRAWING NOT TO SCALE, DIMENSIONS IN MM

SEE PAGES 18-26 FOR COMPLETE LIST OF AVAILABLE MATERIALS, FINISHES AND CONNECTOR INTERFACES
(DIMENSIONS, FORM AND O RING SUBJECT TO CHANGE DEPENDING ON BACKSHELL MATERIAL AND CONNECTOR INTERFACE)





THIS DRAWING IS THE PROPERTY OF POLAMCO LTD AND MUST NOT BE USED FOR COMMERCIAL PURPOSES WITHOUT WRITTEN CONSENT OF THE COMPANY

# KMAF (D) - Mesh Tape Termination Double Slot version

## Interface F - MIL-DTL-38999 SERIES II

MANUFACTURED UNDER LICENCE

'AGUSTAWESTLAND HELICOPTERS UK PATENT 2239358'

Polamco

**Interconnect Solutions Worldwide**

TABLE 1

| SHELL SIZE | A THREAD | ØB MAX | ØG | ØH MAX | C MAX | D MAX | E MAX | F MAX | K ± 0,5 |
|---|---|---|---|---|---|---|---|---|---|
| 08 | 7/16-28UNEF | 18,3 | 6,8 | 13,2 | 12,5 | 14,5 | 22,8 | 21,5 | 15,0 |
| 10 | 9/16-24UNEF | 21,5 | 10,3 | 16,6 | 13,0 | 15,0 | 26,3 | 23,0 | 17,0 |
| 12 | 11/16-24UNEF | 24,5 | 13,2 | 19,6 | 13,6 | 15,5 | 29,3 | 24,5 | 18,0 |
| 14 | 13/16-20UNEF | 27,8 | 16,3 | 22,6 | 14,0 | 16,0 | 32,3 | 28,5 | 20,0 |
| 16 | 15/16-20UNEF | 30,8 | 19,4 | 25,4 | 15,0 | 17,0 | 35,8 | 30,0 | 21,5 |
| 18 | 1 1/16-18UNEF | 34,1 | 22,0 | 28,4 | 16,0 | 18,0 | 39,8 | 31,5 | 23,0 |
| 20 | 1 3/16-18UNEF | 37,3 | 25,0 | 31,6 | 16,6 | 18,5 | 42,3 | 33,0 | 25,0 |
| 22 | 1 5/16-18UNEF | 40,5 | 28,5 | 34,9 | 17,0 | 19,0 | 45,3 | 34,5 | 26,0 |
| 24 | 1 7/16-18UNEF | 43,7 | 31,6 | 38,0 | 17,4 | 19,5 | 48,3 | 36,0 | 28,0 |

TABLE 2

| DOUBLE SLOT OPTION | L ±0,5 | M ±0,2 | N ±0,2 | MESH-TAPE PART NUMBER (ORDERED SEPARATELY - 25 M REEL) |
|---|---|---|---|---|
| D1 | 26,5 | 12,0 | 19,5 | KM (6) |
| D2 | 34,5 | 20,0 | 27,5 | KM (13) |

TABLE 3

| CODE | FINISH |
|---|---|
| C | ELECTROLESS NICKEL |
| B | CADMIUM OLIVE DRAB OVER ELECTROLESS NICKEL |
| ZB | ZINC COBALT OLIVE DRAB OVER ELECTROLESS NICKEL |
| ZN | ZINC NICKEL BLACK PASSIVATE OVER ELECTROLESS NICKEL |

LIST NOT EXHAUSTIVE, SEE PLATING TABLE FOR OTHER OPTIONS

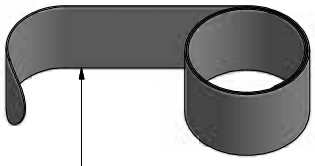

CONSTANT FORCE SPRING (HE)

KMAF1-16-1-C-D1-HE

- SERIES
- STYLE
- CONNECTOR INTERFACE
- ANGLE
- SHELL SIZE (TABLE 1)
- MATERIAL
  - ALUMINIUM ALLOY
- FINISH (TABLE 3)
- DOUBLE SLOT OPTION (TABLE 2)
- TERMINATION OPTION
  - HE - CONSTANT FORCE SPRING
  - OMIT FOR SUPPLIED WITHOUT SPRING

**For tooling and assembly instructions see www.polamco.com**

Backshell supplied with Spring if specified in the part number
Band can be ordered separately (see page 349)
Supplied without mesh tape, which needs to be ordered separately (see page 184)
Sealing and strain relief achieved with Heat Shrink Boot (see page 354)
Adhesive if required for assembly (see page 352)
Screenbraid for EMC/RFI screening (see page 350)

DRAWING NOT TO SCALE, DIMENSIONS IN MM

SEE PAGES 18-26 FOR COMPLETE LIST OF AVAILABLE MATERIALS, FINISHES AND CONNECTOR INTERFACES
(DIMENSIONS, FORM AND O RING SUBJECT TO CHANGE DEPENDING ON BACKSHELL MATERIAL AND CONNECTOR INTERFACE)

THIS DRAWING IS THE PROPERTY OF POLAMCO LTD AND MUST NOT BE USED FOR COMMERCIAL PURPOSES WITHOUT WRITTEN CONSENT OF THE COMPANY

# KMAH (D) - Mesh Tape Termination Double Slot version

## Interface H - MIL-DTL-38999 SERIES III & IV

MANUFACTURED UNDER LICENCE

'AGUSTAWESTLAND HELICOPTERS UK PATENT 2239358'

Polamco

**Interconnect Solutions Worldwide**

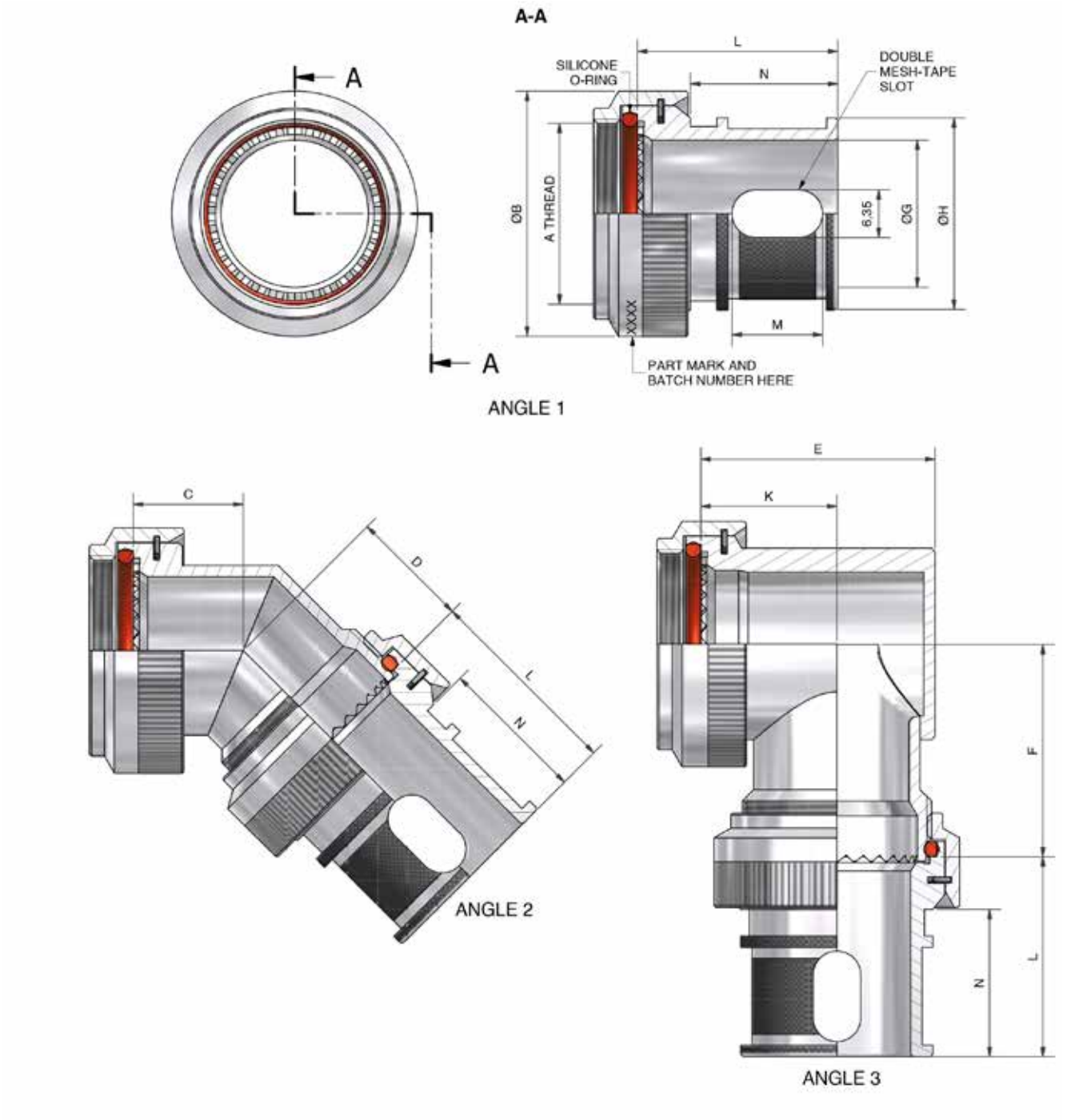


DRAWING NOT TO SCALE, DIMENSIONS IN MM

SEE PAGES 18-26 FOR COMPLETE LIST OF AVAILABLE MATERIALS, FINISHES AND CONNECTOR INTERFACES
(DIMENSIONS, FORM AND O RING SUBJECT TO CHANGE DEPENDING ON BACKSHELL MATERIAL AND CONNECTOR INTERFACE)





THIS DRAWING IS THE PROPERTY OF POLAMCO LTD AND MUST NOT BE USED FOR COMMERCIAL PURPOSES WITHOUT WRITTEN CONSENT OF THE COMPANY

# KMAH (D) - Mesh Tape Termination Double Slot version

## Interface H - MIL-DTL-38999 SERIES III & IV

MANUFACTURED UNDER LICENCE

'AGUSTAWESTLAND HELICOPTERS UK PATENT 2239358'

Polamco

**Interconnect Solutions Worldwide**

TABLE 1

| SHELL SIZE | A THREAD | ØB MAX | ØG | ØH MAX | C MAX | D MAX | E MAX | F MAX | K ± 0,5 |
|---|---|---|---|---|---|---|---|---|---|
| 09 | M12 x 1.0 | 18,0 | 6,8 | 13,2 | 12,5 | 14,5 | 20,0 | 21,5 | 13,5 |
| 11 | M15 x 1.0 | 21,0 | 10,3 | 16,7 | 13,0 | 15,0 | 23,0 | 23,0 | 14,5 |
| 13 | M18 x 1.0 | 24,5 | 13,6 | 20,0 | 13,6 | 15,5 | 27,0 | 24,5 | 17,0 |
| 15 | M22 x 1.0 | 29,0 | 16,3 | 22,7 | 14,0 | 16,0 | 28,0 | 28,5 | 16,5 |
| 17 | M25 x 1.0 | 32,5 | 19,5 | 25,4 | 15,0 | 17,0 | 31,0 | 30,0 | 18,0 |
| 19 | M28 x 1.0 | 35,5 | 21,9 | 28,3 | 16,0 | 18,0 | 36,0 | 31,5 | 21,0 |
| 21 | M31 x 1.0 | 37,0 | 25,2 | 31,6 | 16,6 | 18,5 | 39,0 | 33,0 | 22,0 |
| 23 | M34 x 1.0 | 40,0 | 28,3 | 34,7 | 17,0 | 19,0 | 41,0 | 34,5 | 23,0 |
| 25 | M37 x 1.0 | 43,5 | 31,5 | 37,9 | 17,4 | 19,5 | 47,0 | 36,0 | 27,5 |

TABLE 2

| DOUBLE SLOT OPTION | L ±0,5 | M ±0,2 | N ±0,2 | MESH-TAPE PART NUMBER (ORDERED SEPARATELY - 25 M REEL) |
|---|---|---|---|---|
| D1 | 26,5 | 12,0 | 19,5 | KM (6) |
| D2 | 34,5 | 20,0 | 27,5 | KM (13) |

TABLE 3

| CODE | FINISH |
|---|---|
| C | ELECTROLESS NICKEL |
| B | CADMIUM OLIVE DRAB OVER ELECTROLESS NICKEL |
| ZB | ZINC COBALT OLIVE DRAB OVER ELECTROLESS NICKEL |
| ZN | ZINC NICKEL BLACK PASSIVATE OVER ELECTROLESS NICKEL |

LIST NOT EXHAUSTIVE, SEE PLATING TABLE FOR OTHER OPTIONS

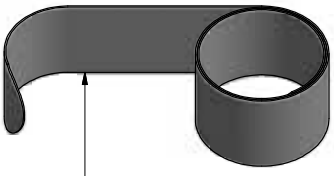

CONSTANT FORCE SPRING (HE)

KMAH1-17-1-C-D1-HE

- SERIES
- STYLE
- CONNECTOR INTERFACE
- ANGLE
- SHELL SIZE (TABLE 1)
- MATERIAL
  - ALUMINIUM ALLOY
- FINISH (TABLE 3)
- DOUBLE SLOT OPTION (TABLE 2)
- TERMINATION OPTION
  - HE - CONSTANT FORCE SPRING
  - OMIT FOR SUPPLIED WITHOUT SPRING

**For tooling and assembly instructions see www.polamco.com**

Backshell supplied with Spring if specified in the part number
Band can be ordered separately (see page 349)
Supplied without mesh tape, which needs to be ordered separately (see page 184)
Sealing and strain relief achieved with Heat Shrink Boot (see page 354)
Adhesive if required for assembly (see page 352)
Screenbraid for EMC/RFI screening (see page 350)

DRAWING NOT TO SCALE, DIMENSIONS IN MM

SEE PAGES 18-26 FOR COMPLETE LIST OF AVAILABLE MATERIALS, FINISHES AND CONNECTOR INTERFACES
(DIMENSIONS, FORM AND O RING SUBJECT TO CHANGE DEPENDING ON BACKSHELL MATERIAL AND CONNECTOR INTERFACE)

THIS DRAWING IS THE PROPERTY OF POLAMCO LTD AND MUST NOT BE USED FOR COMMERCIAL PURPOSES WITHOUT WRITTEN CONSENT OF THE COMPANY

# KMCCF - Mesh Tape Cable Clamp

## Interface F - MIL-DTL-38999 SERIES I

MANUFACTURED UNDER LICENCE
'AGUSTAWESTLAND HELICOPTERS UK PATENT 2239358'

Polamco

**Interconnect Solutions Worldwide**



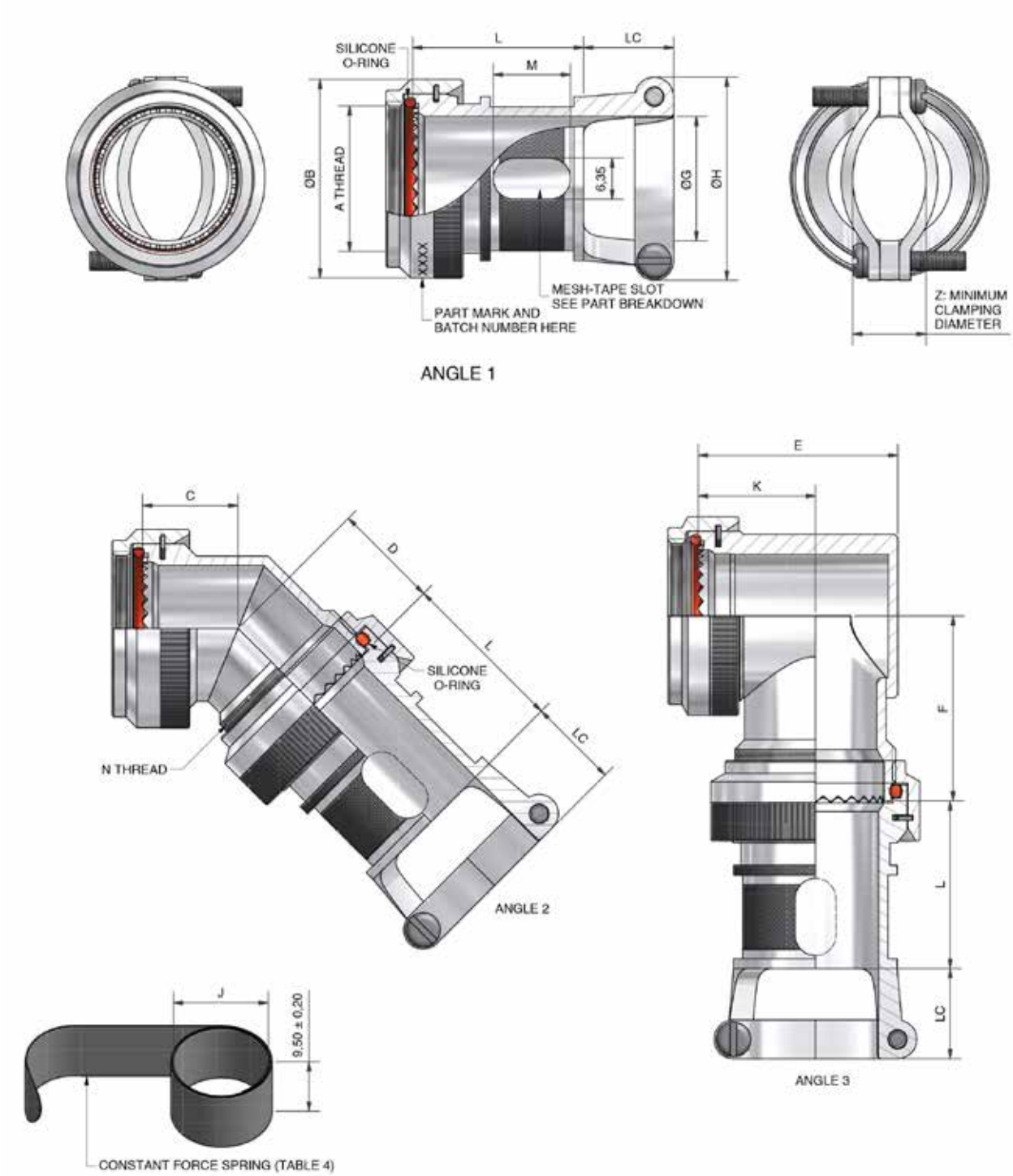


DRAWING NOT TO SCALE, DIMENSIONS IN MM

SEE PAGES 18-26 FOR COMPLETE LIST OF AVAILABLE MATERIALS, FINISHES AND CONNECTOR INTERFACES
(DIMENSIONS, FORM AND O RING SUBJECT TO CHANGE DEPENDING ON BACKSHELL MATERIAL AND CONNECTOR INTERFACE)



THIS DRAWING IS THE PROPERTY OF POLAMCO LTD AND MUST NOT BE USED FOR COMMERCIAL PURPOSES WITHOUT WRITTEN CONSENT OF THE COMPANY

# KMCCF - Mesh Tape Cable Clamp

## Interface F - MIL-DTL-38999 SERIES I

MANUFACTURED UNDER LICENCE

'AGUSTAWESTLAND HELICOPTERS UK PATENT 2239358'

Polamco

**Interconnect Solutions Worldwide**

TABLE 1

| SHELL SIZE | A THREAD | ØB MAX | ØG MIN | ØH MAX | LC ±0,2 | C MAX | D MAX | E MAX | F MAX | K ±0,5 | Z ±0,5 | SPRING REF. | N THREAD |
|---|---|---|---|---|---|---|---|---|---|---|---|---|---|
| 09 | 7/16-28UNEF | 18,0 | 6,8 | 19,0 | 14,0 | 12,5 | 14,5 | 20,0 | 21,5 | 13,7 | 5,7 | HE050 | M12x1.0 |
| 11 | 9/16-24UNEF | 21,0 | 10,2 | 22,2 | 14,0 | 13,0 | 15,0 | 23,0 | 23,0 | 14,7 | 6,9 | HE100 | M15x1.0 |
| 13 | 11/16-24UNEF | 24,5 | 13,1 | 25,2 | 14,0 | 13,6 | 15,5 | 27,0 | 24,5 | 17,2 | 8,5 | HE200 | M18x1.0 |
| 15 | 13/16-20UNEF | 27,8 | 16,2 | 28,5 | 14,0 | 14,0 | 16,0 | 28,0 | 28,5 | 16,7 | 10,4 | HE200 | M22x1.0 |
| 17 | 15/16-20UNEF | 30,8 | 19,3 | 31,7 | 14,0 | 15,0 | 17,0 | 31,0 | 30,0 | 18,2 | 11,4 | HE300 | M25x1.0 |
| 19 | 1 1/16-18UNEF | 34,1 | 22,3 | 34,9 | 17,0 | 16,0 | 18,0 | 36,0 | 31,5 | 21,2 | 14,9 | HE300 | M28x1.0 |
| 21 | 1 3/16-18UNEF | 37,3 | 25,8 | 39,0 | 21,0 | 16,6 | 18,5 | 39,0 | 33,0 | 22,2 | 16,8 | HE300 | M31x1.0 |
| 23 | 1 5/16-18UNEF | 41,0 | 28,3 | 42,8 | 21,0 | 17,0 | 19,0 | 41,0 | 34,5 | 23,2 | 23,9 | HE400 | M34x1.0 |
| 25 | 1 7/16-18UNEF | 43,7 | 31,5 | 46,0 | 21,0 | 17,4 | 19,5 | 47,0 | 36,0 | 27,7 | 22,8 | HE400 | M37x1.0 |

TABLE 2

| SLOT OPTION | L ±0,5 | M ±0,2 | MESH-TAPE PART NUMBER (ORDERED SEPARATELY- 25 M REEL) |
|---|---|---|---|
| S1 | 26,5 | 12,0 | KM (6) |
| S2 | 34,5 | 20,0 | KM (13) |
| D1 | 26,5 | 12,0 | KM (6) |
| D2 | 34,5 | 20,0 | KM (13) |

TABLE 4

| SPRING REF. | J MAX (UNCONSTRAINED) |
|---|---|
| HE050 | 7,5 |
| HE100 | 8,0 |
| HE200 | 12,8 |
| HE300 | 17,9 |
| HE400 | 21,8 |

TABLE 3

| CODE | FINISH |
|---|---|
| C | ELECTROLESS NICKEL |
| B | CADMIUM OLIVE DRAB OVER ELECTROLESS NICKEL |
| ZB | ZINC COBALT OLIVE DRAB OVER ELECTROLESS NICKEL |
| ZN | ZINC NICKEL BLACK PASSIVATE OVER ELECTROLESS NICKEL |

LIST NOT EXHAUSTIVE, SEE PLATING TABLE FOR OTHER OPTIONS

KMCCF1-17-1-C-S1-HE

SERIES
CABLE CLAMP STYLE
CONNECTOR INTERFACE
ANGLE
SHELL SIZE (TABLE 1)
MATERIAL
ALUMINIUM ALLOY
FINISH (TABLE 2)
SLOT OPTION (TABLE 3)
S - SINGLE SLOT
D - DOUBLE SLOT
TERMINATION OPTION
HE - CONSTANT FORCE SPRING
OMIT FOR SUPPLIED WITHOUT SPRING

**For tooling and assembly instructions see www.polamco.com**

Backshell supplied with Spring if specified in the part number
Band can be ordered separately (see page 349)
Supplied without mesh tape, which needs to be ordered separately (see page 184)
Sealing and strain relief achieved with Heat Shrink Boot (see page 354)
Adhesive if required for assembly (see page 352)
Screenbraid for EMC/RFI screening (see page 350)

DRAWING NOT TO SCALE, DIMENSIONS IN MM

SEE PAGES 18-26 FOR COMPLETE LIST OF AVAILABLE MATERIALS, FINISHES AND CONNECTOR INTERFACES
(DIMENSIONS, FORM AND O RING SUBJECT TO CHANGE DEPENDING ON BACKSHELL MATERIAL AND CONNECTOR INTERFACE)

THIS DRAWING IS THE PROPERTY OF POLAMCO LTD AND MUST NOT BE USED FOR COMMERCIAL PURPOSES WITHOUT WRITTEN CONSENT OF THE COMPANY

# KMCCF - Mesh Tape Cable Clamp

## Interface F - MIL-DTL-38999 SERIES II

MANUFACTURED UNDER LICENCE
'AGUSTAWESTLAND HELICOPTERS UK PATENT 2239358'

Polamco

**Interconnect Solutions Worldwide**

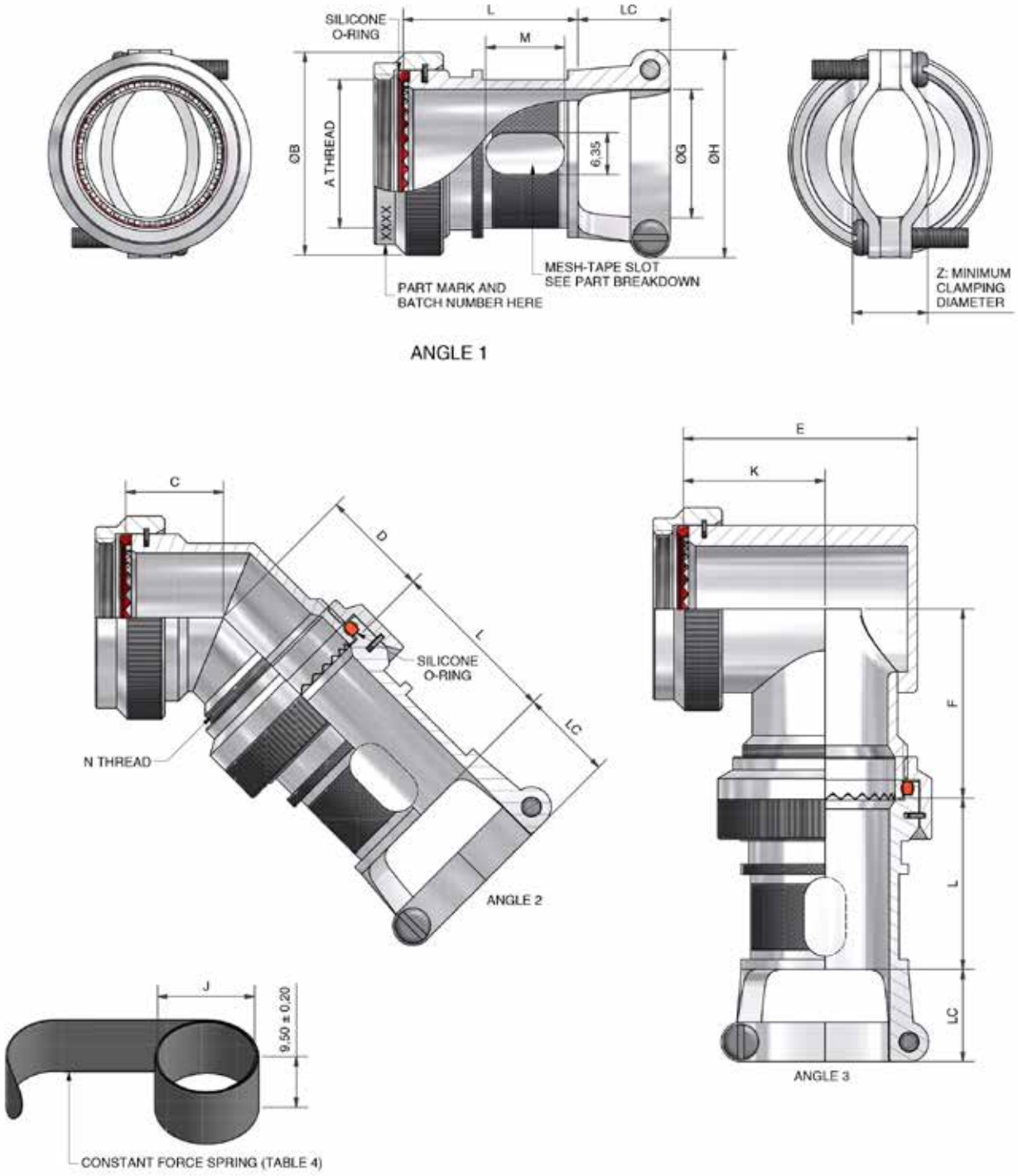


DRAWING NOT TO SCALE, DIMENSIONS IN MM

SEE PAGES 18-26 FOR COMPLETE LIST OF AVAILABLE MATERIALS, FINISHES AND CONNECTOR INTERFACES
(DIMENSIONS, FORM AND O RING SUBJECT TO CHANGE DEPENDING ON BACKSHELL MATERIAL AND CONNECTOR INTERFACE)





THIS DRAWING IS THE PROPERTY OF POLAMCO LTD AND MUST NOT BE USED FOR COMMERCIAL PURPOSES WITHOUT WRITTEN CONSENT OF THE COMPANY

# KMCCF - Mesh Tape Cable Clamp

## Interface F - MIL-DTL-38999 SERIES II

MANUFACTURED UNDER LICENCE

'AGUSTAWESTLAND HELICOPTERS UK PATENT 2239358'

Polamco

**Interconnect Solutions Worldwide**

TABLE 1

| SHELL SIZE | A THREAD | ØB MAX | ØG MIN | ØH MAX | LC ±0,2 | C MAX | D MAX | E MAX | F MAX | K ±0,5 | Z ±0,5 | SPRING REF. | N THREAD |
|---|---|---|---|---|---|---|---|---|---|---|---|---|---|
| 08 | 7/16-28UNEF | 18,3 | 6,6 | 19,0 | 14,0 | 12,5 | 14,5 | 23,0 | 21,5 | 13,7 | 5,7 | HE050 | M12x1.0 |
| 10 | 9/16-24UNEF | 21,5 | 10,1 | 22,2 | 14,0 | 13,0 | 15,0 | 26,5 | 23,0 | 14,7 | 6,9 | HE100 | M15x1.0 |
| 12 | 11/16-24UNEF | 24,5 | 12,9 | 25,2 | 14,0 | 13,6 | 15,5 | 29,5 | 24,5 | 17,2 | 8,5 | HE200 | M18x1.0 |
| 14 | 13/16-20UNEF | 27,8 | 16,1 | 28,5 | 14,0 | 14,0 | 16,0 | 32,5 | 28,5 | 16,7 | 10,4 | HE200 | M22x1.0 |
| 16 | 15/16-20UNEF | 30,8 | 19,3 | 31,7 | 14,0 | 15,0 | 17,0 | 36,0 | 30,0 | 18,2 | 11,4 | HE300 | M25x1.0 |
| 18 | 1 1/16-18UNEF | 34,1 | 21,7 | 34,9 | 17,0 | 16,0 | 18,0 | 40,0 | 31,5 | 21,2 | 14,9 | HE300 | M28x1.0 |
| 20 | 1 3/16-18UNEF | 37,3 | 24,9 | 39,0 | 21,0 | 16,6 | 18,5 | 42,5 | 33,0 | 22,2 | 16,8 | HE300 | M31x1.0 |
| 22 | 1 5/16-18UNEF | 40,5 | 28,1 | 42,8 | 21,0 | 17,0 | 19,0 | 45,5 | 34,5 | 23,2 | 23,9 | HE400 | M34x1.0 |
| 24 | 1 7/16-18UNEF | 43,7 | 31,3 | 46,0 | 21,0 | 17,4 | 19,5 | 48,5 | 36,0 | 27,7 | 22,8 | HE400 | M37x1.0 |

TABLE 2

| SLOT OPTION | L ±0,5 | M ±0,2 | MESH-TAPE PART NUMBER (ORDERED SEPARATELY- 25 M REEL) |
|---|---|---|---|
| S1 | 26,5 | 12,0 | KM (6) |
| S2 | 34,5 | 20,0 | KM (13) |
| D1 | 26,5 | 12,0 | KM (6) |
| D2 | 34,5 | 20,0 | KM (13) |

TABLE 4

| SPRING REF. | J MAX (UNCONSTRAINED) |
|---|---|
| HE050 | 7,5 |
| HE100 | 8,0 |
| HE200 | 12,8 |
| HE300 | 17,9 |
| HE400 | 21,8 |

TABLE 3

| CODE | FINISH |
|---|---|
| C | ELECTROLESS NICKEL |
| B | CADMIUM OLIVE DRAB OVER ELECTROLESS NICKEL |
| ZB | ZINC COBALT OLIVE DRAB OVER ELECTROLESS NICKEL |
| ZN | ZINC NICKEL BLACK PASSIVATE OVER ELECTROLESS NICKEL |

LIST NOT EXHAUSTIVE, SEE PLATING TABLE FOR OTHER OPTIONS

KMCCF1-16-1-C-S1-HE

SERIES
CABLE CLAMP STYLE
CONNECTOR INTERFACE
ANGLE
SHELL SIZE (TABLE 1)
MATERIAL
ALUMINIUM ALLOY
FINISH (TABLE 2)
SLOT OPTION (TABLE 3)
S - SINGLE SLOT
D - DOUBLE SLOT
TERMINATION OPTION
HE - CONSTANT FORCE SPRING
OMIT FOR SUPPLIED WITHOUT SPRING

**For tooling and assembly instructions see www.polamco.com**

Backshell supplied with Spring if specified in the part number
Band can be ordered separately (see page 349)
Supplied without mesh tape, which needs to be ordered separately (see page 184)
Sealing and strain relief achieved with Heat Shrink Boot (see page 354)
Adhesive if required for assembly (see page 352)
Screenbraid for EMC/RFI screening (see page 350)

DRAWING NOT TO SCALE, DIMENSIONS IN MM

SEE PAGES 18-26 FOR COMPLETE LIST OF AVAILABLE MATERIALS, FINISHES AND CONNECTOR INTERFACES
(DIMENSIONS, FORM AND O RING SUBJECT TO CHANGE DEPENDING ON BACKSHELL MATERIAL AND CONNECTOR INTERFACE)

THIS DRAWING IS THE PROPERTY OF POLAMCO LTD AND MUST NOT BE USED FOR COMMERCIAL PURPOSES WITHOUT WRITTEN CONSENT OF THE COMPANY

# KMCCH - Mesh Tape Cable Clamp

## Interface H - MIL-DTL-38999 SERIES III & IV

MANUFACTURED UNDER LICENCE
'AGUSTAWESTLAND HELICOPTERS UK PATENT 2239358'

Polamco

**Interconnect Solutions Worldwide**

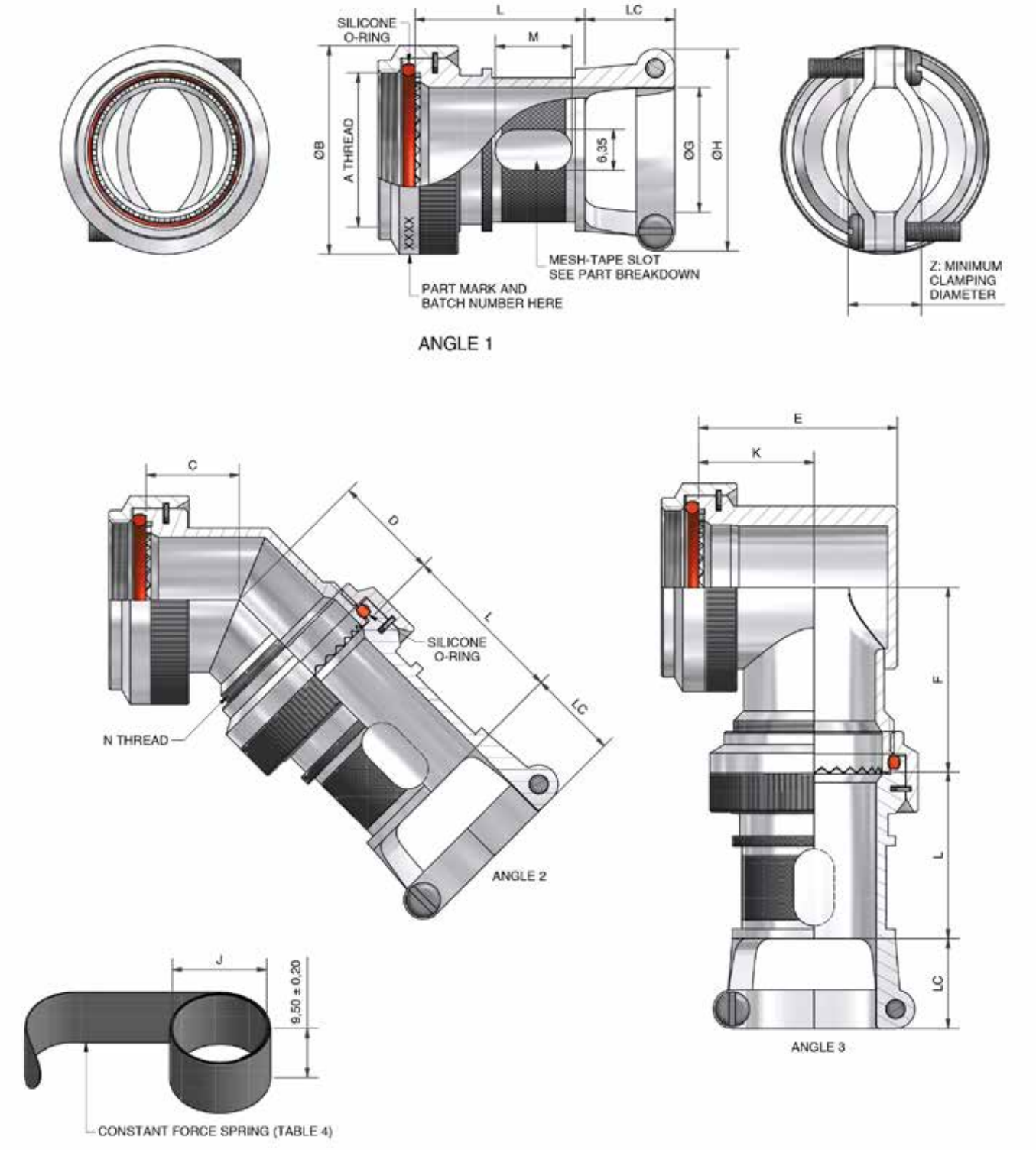


DRAWING NOT TO SCALE, DIMENSIONS IN MM

SEE PAGES 18-26 FOR COMPLETE LIST OF AVAILABLE MATERIALS, FINISHES AND CONNECTOR INTERFACES
(DIMENSIONS, FORM AND O RING SUBJECT TO CHANGE DEPENDING ON BACKSHELL MATERIAL AND CONNECTOR INTERFACE)





THIS DRAWING IS THE PROPERTY OF POLAMCO LTD AND MUST NOT BE USED FOR COMMERCIAL PURPOSES WITHOUT WRITTEN CONSENT OF THE COMPANY

# KMCCH - Mesh Tape Cable Clamp

## Interface H - MIL-DTL-38999 SERIES III & IV

MANUFACTURED UNDER LICENCE

'AGUSTAWESTLAND HELICOPTERS UK PATENT 2239358'

Polamco

**Interconnect Solutions Worldwide**

TABLE 1

| SHELL SIZE | A THREAD | ØB MAX | ØG MIN | ØH MAX | LC ±0,2 | C MAX | D MAX | E MAX | F MAX | K ±0,5 | Z ±0,5 | SPRING REF. | N THREAD |
|---|---|---|---|---|---|---|---|---|---|---|---|---|---|
| 09 | M12x1.0 | 18,0 | 6,8 | 19,0 | 14,0 | 12,5 | 14,5 | 20,0 | 21,5 | 15,5 | 5,7 | HE050 | M12x1.0 |
| 11 | M15x1.0 | 21,0 | 10,3 | 22,2 | 14,0 | 13,0 | 15,0 | 23,0 | 23,0 | 16,5 | 6,9 | HE100 | M15x1.0 |
| 13 | M18x1.0 | 24,5 | 13,6 | 25,2 | 14,0 | 13,6 | 15,5 | 27,0 | 24,5 | 19,0 | 8,5 | HE200 | M18x1.0 |
| 15 | M22x1.0 | 29,0 | 16,3 | 28,5 | 14,0 | 14,0 | 16,0 | 28,0 | 28,5 | 18,5 | 10,4 | HE200 | M22x1.0 |
| 17 | M25x1.0 | 32,5 | 19,5 | 31,7 | 14,0 | 15,0 | 17,0 | 31,0 | 30,0 | 20,0 | 11,4 | HE300 | M25x1.0 |
| 19 | M28x1.0 | 35,5 | 21,9 | 34,9 | 17,0 | 16,0 | 18,0 | 36,0 | 31,5 | 23,0 | 14,9 | HE300 | M28x1.0 |
| 21 | M31x1.0 | 37,0 | 25,2 | 39,0 | 21,0 | 16,6 | 18,5 | 39,0 | 33,0 | 24,0 | 16,8 | HE300 | M31x1.0 |
| 23 | M34x1.0 | 40,0 | 28,3 | 42,8 | 21,0 | 17,0 | 19,0 | 41,0 | 34,5 | 25,0 | 23,9 | HE400 | M34x1.0 |
| 25 | M37x1.0 | 43,5 | 31,5 | 46,0 | 21,0 | 17,4 | 19,5 | 47,0 | 36,0 | 29,5 | 22,8 | HE400 | M37x1.0 |

TABLE 2

| SLOT OPTION | L ±0,5 | M ±0,2 | MESH-TAPE PART NUMBER (ORDERED SEPARATELY- 25 M REEL) |
|---|---|---|---|
| S1 | 26,5 | 12,0 | KM (6) |
| S2 | 34,5 | 20,0 | KM (13) |
| D1 | 26,5 | 12,0 | KM (6) |
| D2 | 34,5 | 20,0 | KM (13) |

TABLE 4

| SPRING REF. | J MAX (UNCONSTRAINED) |
|---|---|
| HE050 | 7,5 |
| HE100 | 8,0 |
| HE200 | 12,8 |
| HE300 | 17,9 |
| HE400 | 21,8 |

TABLE 3

| CODE | FINISH |
|---|---|
| C | ELECTROLESS NICKEL |
| B | CADMIUM OLIVE DRAB OVER ELECTROLESS NICKEL |
| ZB | ZINC COBALT OLIVE DRAB OVER ELECTROLESS NICKEL |
| ZN | ZINC NICKEL BLACK PASSIVATE OVER ELECTROLESS NICKEL |

LIST NOT EXHAUSTIVE, SEE PLATING TABLE FOR OTHER OPTIONS

KMCCH1-17-1-C-S1-HE

SERIES
CABLE CLAMP STYLE
CONNECTOR INTERFACE
ANGLE
SHELL SIZE (TABLE 1)
MATERIAL
ALUMINIUM ALLOY
FINISH (TABLE 2)
SLOT OPTION (TABLE 3)
S - SINGLE SLOT
D - DOUBLE SLOT
TERMINATION OPTION
HE - CONSTANT FORCE SPRING
OMIT FOR SUPPLIED WITHOUT SPRING

**For tooling and assembly instructions see www.polamco.com**

Backshell supplied with Spring if specified in the part number
Band can be ordered separately (see page 349)
Supplied without mesh tape, which needs to be ordered separately (see page 184)
Sealing and strain relief achieved with Heat Shrink Boot (see page 354)
Adhesive if required for assembly (see page 352)
Screenbraid for EMC/RFI screening (see page 350)

DRAWING NOT TO SCALE, DIMENSIONS IN MM

SEE PAGES 18-26 FOR COMPLETE LIST OF AVAILABLE MATERIALS, FINISHES AND CONNECTOR INTERFACES
(DIMENSIONS, FORM AND O RING SUBJECT TO CHANGE DEPENDING ON BACKSHELL MATERIAL AND CONNECTOR INTERFACE)

THIS DRAWING IS THE PROPERTY OF POLAMCO LTD AND MUST NOT BE USED FOR COMMERCIAL PURPOSES WITHOUT WRITTEN CONSENT OF THE COMPANY

# Knitted Wire Mesh Tape

## Used with KM Series - Knit Mesh Backshells

Polamco

**Interconnect Solutions Worldwide**

MESH TAPE

DRAWING NOT TO SCALE, DIMENSIONS IN MM

SEE PAGES 18-26 FOR COMPLETE LIST OF AVAILABLE MATERIALS, FINISHES AND CONNECTOR INTERFACES
(DIMENSIONS, FORM AND O RING SUBJECT TO CHANGE DEPENDING ON BACKSHELL MATERIAL AND CONNECTOR INTERFACE)



THIS DRAWING IS THE PROPERTY OF POLAMCO LTD AND MUST NOT BE USED FOR COMMERCIAL PURPOSES WITHOUT WRITTEN CONSENT OF THE COMPANY

# Knitted Wire Mesh Tape

## Used with KM Series - Knit Mesh Backshells

Polamco

**Interconnect Solutions Worldwide**

### Wire mesh EMI shielding tapes are constructed from knitting a fine wire into a double thickness layflat stocking.

The tape is highly flexible, light, corrosion and high temperature resistant but also stronger and more resistant to abrasion and physical damage than other tape materials.

| TABLE 1 | |
|---|---|
| **Material** | **Wire Diameter** |
| Tinned Copper (BS 4109 with 0.7-1 micron tin plate) | 0.11mm |

| TABLE 2 | | |
|---|---|---|
| **Width** | **Part Number** | **Roll Length** |
| 6mm | KM(6) | 25m |
| 13mm | KM(13) | 25m |

MESH TAPE

DRAWING NOT TO SCALE, DIMENSIONS IN MM

SEE PAGES 18-26 FOR COMPLETE LIST OF AVAILABLE MATERIALS, FINISHES AND CONNECTOR INTERFACES
(DIMENSIONS, FORM AND O RING SUBJECT TO CHANGE DEPENDING ON BACKSHELL MATERIAL AND CONNECTOR INTERFACE)

THIS DRAWING IS THE PROPERTY OF POLAMCO LTD AND MUST NOT BE USED FOR COMMERCIAL PURPOSES WITHOUT WRITTEN CONSENT OF THE COMPANY

# 308F - Dual Cone Termination

## Interface F - MIL-DTL-38999 SERIES I

Polamco

**Interconnect Solutions Worldwide**

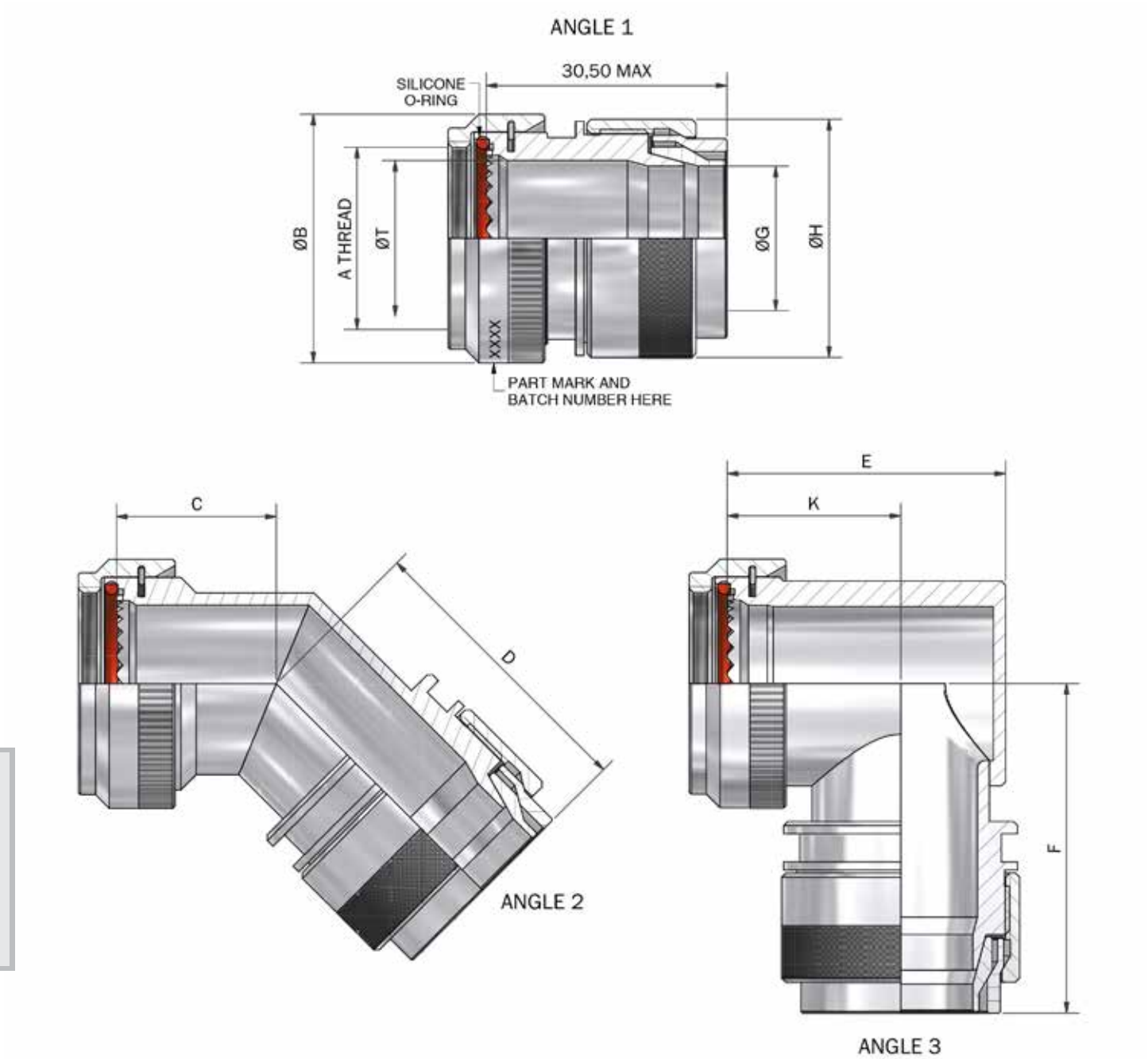


DRAWING NOT TO SCALE, DIMENSIONS IN MM

SEE PAGES 18-26 FOR COMPLETE LIST OF AVAILABLE MATERIALS, FINISHES AND CONNECTOR INTERFACES
(DIMENSIONS, FORM AND O RING SUBJECT TO CHANGE DEPENDING ON BACKSHELL MATERIAL AND CONNECTOR INTERFACE)





THIS DRAWING IS THE PROPERTY OF POLAMCO LTD AND MUST NOT BE USED FOR COMMERCIAL PURPOSES WITHOUT WRITTEN CONSENT OF THE COMPANY

# 308F - Dual Cone Termination

## Interface F - MIL-DTL-38999 SERIES I

Polamco

**Interconnect Solutions Worldwide**

TABLE 1

| SHELL SIZE | A THREAD | ØB MAX | C ±0,5 | D MAX | ØT MIN | ØG MIN | ØH MAX | E MAX | F MAX | K ±0,5 |
|---|---|---|---|---|---|---|---|---|---|---|
| 09 | 7/16-28 UNEF | 18,0 | 16,4 | 33,3 | 6,8 | 6,9 | 18,4 | 22,7 | 35,2 | 15,0 |
| 11 | 9/16-24 UNEF | 21,0 | 17,2 | 34,5 | 10,2 | 9,6 | 22,0 | 26,2 | 37,0 | 17,0 |
| 13 | 11/16-24 UNEF | 24,5 | 17,6 | 34,9 | 13,1 | 12,7 | 24,0 | 29,2 | 38,5 | 18,0 |
| 15 | 13/16-20 UNEF | 27,8 | 18,5 | 35,8 | 16,2 | 14,8 | 27,0 | 32,2 | 40,0 | 20,0 |
| 17 | 15/16-20 UNEF | 30,8 | 19,2 | 36,6 | 19,3 | 17,9 | 29,5 | 35,7 | 41,2 | 21,5 |
| 19 | 1 1/16-18 UNEF | 34,1 | 19,6 | 36,6 | 22,3 | 19,9 | 33,9 | 39,7 | 43,3 | 23,0 |
| 21 | 1 3/16-18 UNEF | 37,3 | 20,4 | 37,7 | 25,8 | 23,1 | 37,0 | 42,2 | 44,9 | 25,0 |
| 23 | 1 5/16-18 UNEF | 41,0 | 20,8 | 38,1 | 28,3 | 26,2 | 40,8 | 45,2 | 46,4 | 26,0 |
| 25 | 1 7/16-18 UNEF | 43,7 | 21,7 | 39,0 | 31,5 | 28,8 | 43,0 | 48,2 | 47,9 | 28,0 |

TABLE 2

| CODE | FINISH |
|---|---|
| C | ELECTROLESS NICKEL |
| B | CADMIUM OLIVE DRAB OVER ELECTROLESS NICKEL |
| ZB | ZINC COBALT OLIVE DRAB OVER ELECTROLESS NICKEL |
| ZN | ZINC NICKEL BLACK PASSIVATE OVER ELECTROLESS NICKEL |

LIST NOT EXHAUSTIVE, SEE PLATING TABLE FOR OTHER OPTIONS

308F1-17-1-C

SERIES
CONNECTOR INTERFACE
ANGLE
SHELL SIZE (TABLE 1)
MATERIAL
ALUMINIUM ALLOY
FINISH (TABLE 2)

CONE TERMINATION

**For tooling and assembly instructions see www.polamco.com**

Backshell supplied with Cone(s)
Sealing and strain relief achieved with Heat Shrink Boot for non CC versions (see page 354)
Adhesive if required for assembly (see page 352)
Screenbraid for EMC/RFI screening (see page 350)

DRAWING NOT TO SCALE, DIMENSIONS IN MM

SEE PAGES 18-26 FOR COMPLETE LIST OF AVAILABLE MATERIALS, FINISHES AND CONNECTOR INTERFACES
(DIMENSIONS, FORM AND O RING SUBJECT TO CHANGE DEPENDING ON BACKSHELL MATERIAL AND CONNECTOR INTERFACE)

THIS DRAWING IS THE PROPERTY OF POLAMCO LTD AND MUST NOT BE USED FOR
COMMERCIAL PURPOSES WITHOUT WRITTEN CONSENT OF THE COMPANY

# 308F - Dual Cone Termination

## Interface F - MIL-DTL-38999 SERIES II

Polamco

**Interconnect Solutions Worldwide**

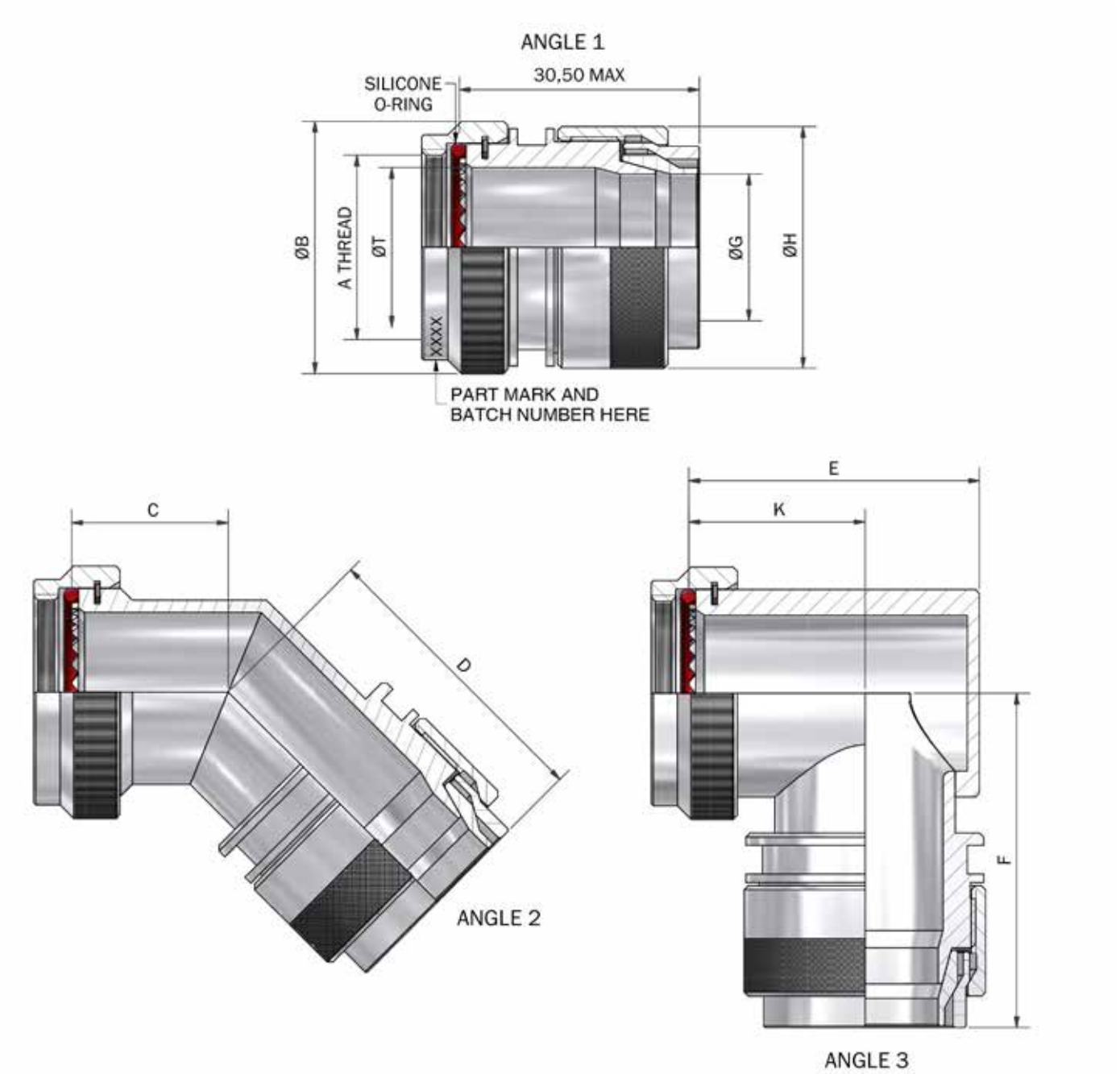


DRAWING NOT TO SCALE, DIMENSIONS IN MM

SEE PAGES 18-26 FOR COMPLETE LIST OF AVAILABLE MATERIALS, FINISHES AND CONNECTOR INTERFACES
(DIMENSIONS, FORM AND O RING SUBJECT TO CHANGE DEPENDING ON BACKSHELL MATERIAL AND CONNECTOR INTERFACE)





THIS DRAWING IS THE PROPERTY OF POLAMCO LTD AND MUST NOT BE USED FOR COMMERCIAL PURPOSES WITHOUT WRITTEN CONSENT OF THE COMPANY

# 308F - Dual Cone Termination

## Interface F - MIL-DTL-38999 SERIES II

Polamco

**Interconnect Solutions Worldwide**

TABLE 1

| SHELL SIZE | A THREAD | ØB MAX | C ±0,5 | D MAX | ØT MIN | ØG MIN | ØH MAX | E MAX | F MAX | K ±0,5 |
|---|---|---|---|---|---|---|---|---|---|---|
| 08 | 7/16-28 UNEF | 18,3 | 16,4 | 33,3 | 6,6 | 6,9 | 18,4 | 22,7 | 35,2 | 15,0 |
| 10 | 9/16-24 UNEF | 21,5 | 17,2 | 34,5 | 10,1 | 9,6 | 22,0 | 26,2 | 37,0 | 17,0 |
| 12 | 11/16-24 UNEF | 24,5 | 17,6 | 34,9 | 12,9 | 12,7 | 24,0 | 29,2 | 38,5 | 18,0 |
| 14 | 13/16-20 UNEF | 27,8 | 18,5 | 35,8 | 16,1 | 14,8 | 27,0 | 32,2 | 40,0 | 20,0 |
| 16 | 15/16-20 UNEF | 30,8 | 19,2 | 36,6 | 19,3 | 17,9 | 29,5 | 35,7 | 41,2 | 21,5 |
| 18 | 1 1/16-18 UNEF | 34,1 | 19,6 | 36,6 | 21,7 | 19,9 | 33,9 | 39,7 | 43,3 | 23,0 |
| 20 | 1 3/16-18 UNEF | 37,3 | 20,4 | 37,7 | 24,9 | 23,1 | 37,0 | 42,2 | 44,9 | 25,0 |
| 22 | 1 5/16-18 UNEF | 40,5 | 20,8 | 38,1 | 28,1 | 26,2 | 40,8 | 45,2 | 46,4 | 26,0 |
| 24 | 1 7/16-18 UNEF | 43,7 | 21,7 | 39,0 | 31,3 | 28,8 | 43,0 | 48,2 | 47,9 | 28,0 |

TABLE 2

| CODE | FINISH |
|---|---|
| C | ELECTROLESS NICKEL |
| B | CADMIUM OLIVE DRAB OVER ELECTROLESS NICKEL |
| ZB | ZINC COBALT OLIVE DRAB OVER ELECTROLESS NICKEL |
| ZN | ZINC NICKEL BLACK PASSIVATE OVER ELECTROLESS NICKEL |

LIST NOT EXHAUSTIVE, SEE PLATING TABLE FOR OTHER OPTIONS

308F1-16-1-C

- SERIES
- CONNECTOR INTERFACE
- ANGLE
- SHELL SIZE (TABLE 1)
- MATERIAL
  - ALUMINIUM ALLOY
- FINISH (TABLE 2)

**For tooling and assembly instructions see www.polamco.com**

Backshell supplied with Cone(s)
Sealing and strain relief achieved with Heat Shrink Boot for non CC versions (see page 354)
Adhesive if required for assembly (see page 352)
Screenbraid for EMC/RFI screening (see page 350)

DRAWING NOT TO SCALE, DIMENSIONS IN MM

SEE PAGES 18-26 FOR COMPLETE LIST OF AVAILABLE MATERIALS, FINISHES AND CONNECTOR INTERFACES
(DIMENSIONS, FORM AND O RING SUBJECT TO CHANGE DEPENDING ON BACKSHELL MATERIAL AND CONNECTOR INTERFACE)

THIS DRAWING IS THE PROPERTY OF POLAMCO LTD AND MUST NOT BE USED FOR
COMMERCIAL PURPOSES WITHOUT WRITTEN CONSENT OF THE COMPANY

# 308H - Dual Cone Termination

## Interface H - MIL-DTL-38999 SERIES III & IV

Polamco

**Interconnect Solutions Worldwide**

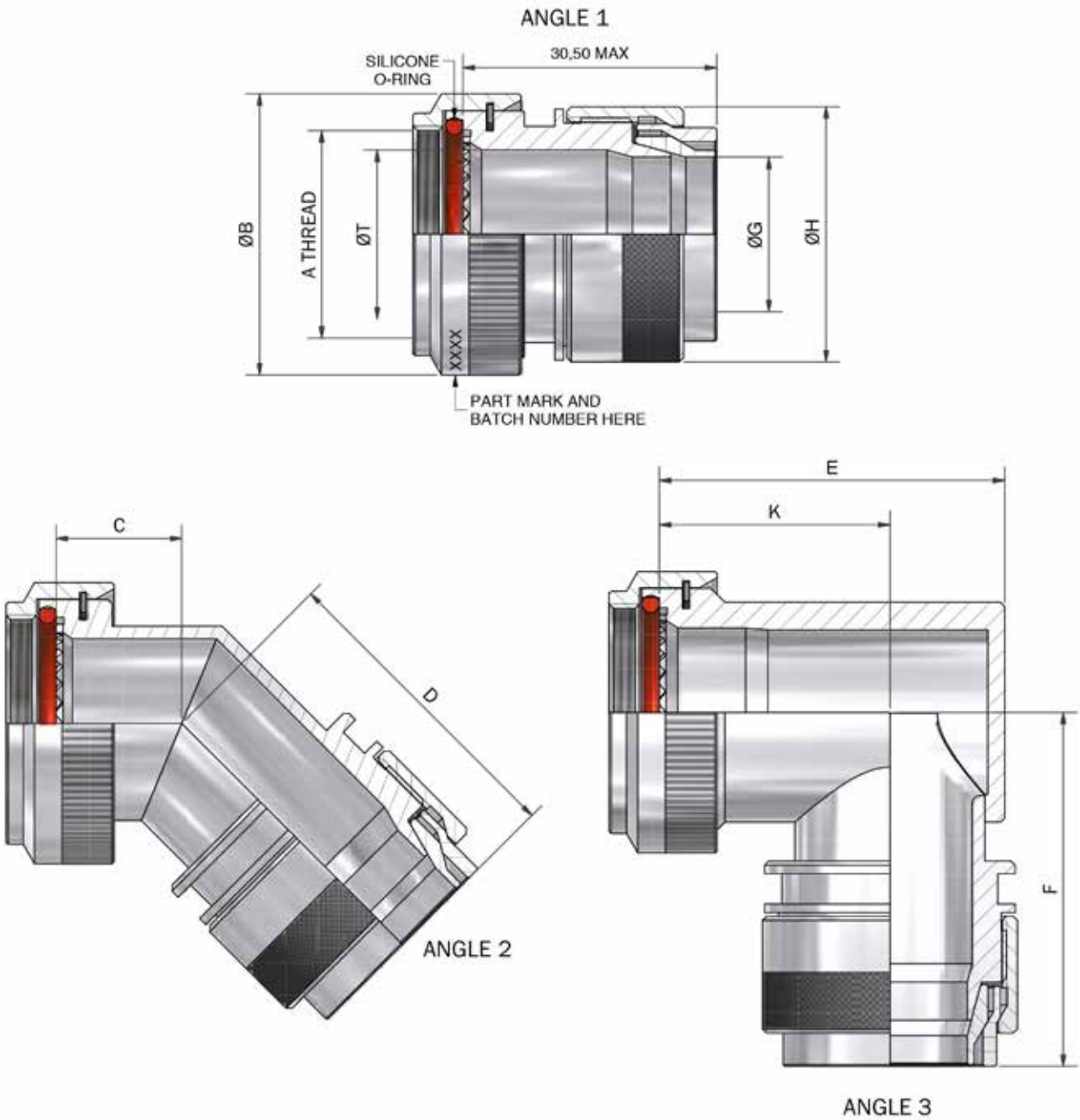


DRAWING NOT TO SCALE, DIMENSIONS IN MM

SEE PAGES 18-26 FOR COMPLETE LIST OF AVAILABLE MATERIALS, FINISHES AND CONNECTOR INTERFACES
(DIMENSIONS, FORM AND O RING SUBJECT TO CHANGE DEPENDING ON BACKSHELL MATERIAL AND CONNECTOR INTERFACE)





THIS DRAWING IS THE PROPERTY OF POLAMCO LTD AND MUST NOT BE USED FOR COMMERCIAL PURPOSES WITHOUT WRITTEN CONSENT OF THE COMPANY

# 308H - Dual Cone Termination

## Interface H - MIL-DTL-38999 SERIES III & IV

Polamco

**Interconnect Solutions Worldwide**

TABLE 1

| SHELL SIZE | A THREAD | ØB MAX | C MAX | D MAX | ØT MIN | ØG MIN | ØH MAX | E MAX | F MAX | K ±0,5 |
|---|---|---|---|---|---|---|---|---|---|---|
| 09 | M12 x 1.0 | 18,0 | 13,1 | 33,3 | 6,7 | 6,9 | 18,4 | 26,0 | 35,2 | 17,5 |
| 11 | M15 x 1.0 | 21,0 | 13,9 | 34,5 | 10,2 | 9,6 | 22,0 | 27,0 | 37,0 | 17,5 |
| 13 | M18 x 1.0 | 24,5 | 14,5 | 34,9 | 13,5 | 12,7 | 24,0 | 31,5 | 38,5 | 20,0 |
| 15 | M22 x 1.0 | 29,0 | 15,5 | 35,8 | 16,2 | 14,8 | 27,0 | 37,5 | 40,0 | 24,5 |
| 17 | M25 x 1.0 | 32,5 | 16,1 | 36,6 | 19,4 | 17,9 | 29,5 | 40,5 | 41,2 | 26,7 |
| 19 | M28 x 1.0 | 35,5 | 16,8 | 36,6 | 21,8 | 19,9 | 33,9 | 45,0 | 43,3 | 27,0 |
| 21 | M31 x 1.0 | 37,0 | 17,1 | 37,7 | 25,1 | 23,1 | 37,0 | 49.5 | 44,9 | 30,5 |
| 23 | M34 x 1.0 | 40,0 | 17,7 | 38,1 | 28,2 | 26,2 | 40,8 | 52,0 | 46,4 | 31,5 |
| 25 | M37 x 1.0 | 43,5 | 18,4 | 39,0 | 31,4 | 28,8 | 43,0 | 52,0 | 47,9 | 28,5 |

TABLE 2

| CODE | FINISH |
|---|---|
| C | ELECTROLESS NICKEL |
| B | CADMIUM OLIVE DRAB OVER ELECTROLESS NICKEL |
| ZB | ZINC COBALT OLIVE DRAB OVER ELECTROLESS NICKEL |
| ZN | ZINC NICKEL BLACK PASSIVATE OVER ELECTROLESS NICKEL |

LIST NOT EXHAUSTIVE, SEE PLATING TABLE FOR OTHER OPTIONS

308H1-17-1-C

- SERIES
- CONNECTOR INTERFACE
- ANGLE
- SHELL SIZE (TABLE 1)
- MATERIAL
  - ALUMINIUM ALLOY
- FINISH (TABLE 2)

CONE TERMINATION

**For tooling and assembly instructions see www.polamco.com**

Backshell supplied with Cone(s)
Sealing and strain relief achieved with Heat Shrink Boot for non CC versions (see page 354)
Adhesive if required for assembly (see page 352)
Screenbraid for EMC/RFI screening (see page 350)

DRAWING NOT TO SCALE, DIMENSIONS IN MM

SEE PAGES 18-26 FOR COMPLETE LIST OF AVAILABLE MATERIALS, FINISHES AND CONNECTOR INTERFACES
(DIMENSIONS, FORM AND O RING SUBJECT TO CHANGE DEPENDING ON BACKSHELL MATERIAL AND CONNECTOR INTERFACE)

THIS DRAWING IS THE PROPERTY OF POLAMCO LTD AND MUST NOT BE USED FOR
COMMERCIAL PURPOSES WITHOUT WRITTEN CONSENT OF THE COMPANY

# 308H (NB) - Dual Cone Termination
# Nickel Aluminium Bronze

## Interface H - MIL-DTL-38999 SERIES III & IV

Polamco

**Interconnect Solutions Worldwide**

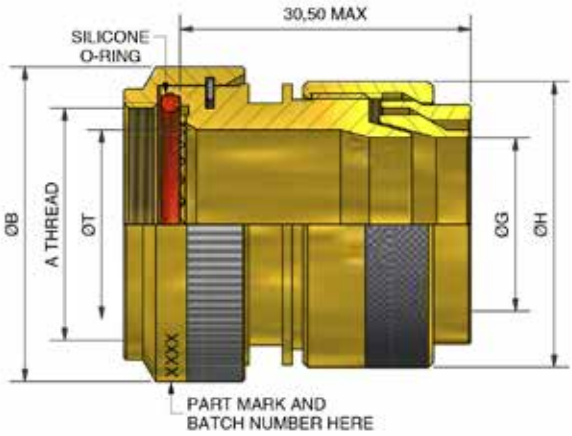


ANGLE 1

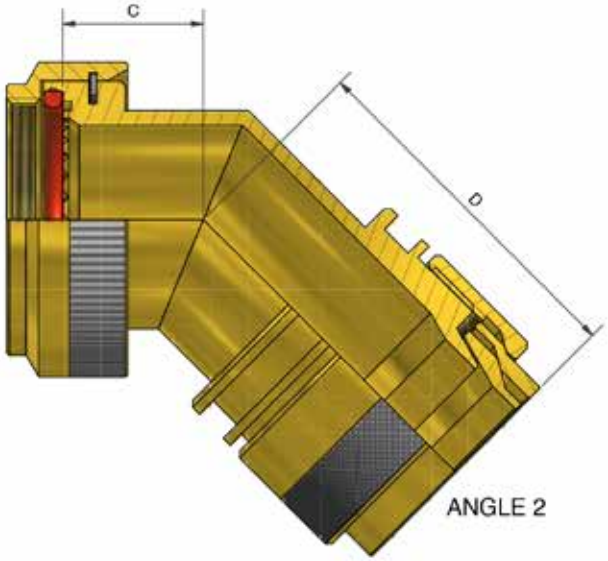


ANGLE 2

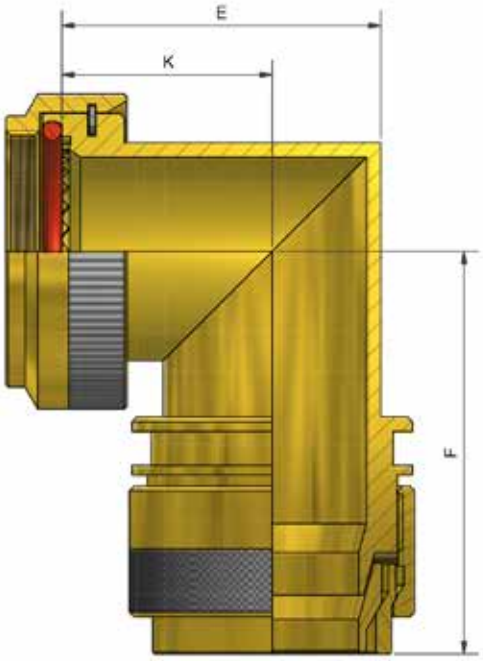


ANGLE 3

DRAWING NOT TO SCALE, DIMENSIONS IN MM

SEE PAGES 18-26 FOR COMPLETE LIST OF AVAILABLE MATERIALS, FINISHES AND CONNECTOR INTERFACES
(DIMENSIONS, FORM AND O RING SUBJECT TO CHANGE DEPENDING ON BACKSHELL MATERIAL AND CONNECTOR INTERFACE)





THIS DRAWING IS THE PROPERTY OF POLAMCO LTD AND MUST NOT BE USED FOR COMMERCIAL PURPOSES WITHOUT WRITTEN CONSENT OF THE COMPANY

# 308H (NB) - Dual Cone Termination Nickel Aluminium Bronze

## Interface H - MIL-DTL-38999 SERIES III & IV

Polamco

**Interconnect Solutions Worldwide**

TABLE 1

| SHELL SIZE | A THREAD | ØB MAX | C MAX | D MAX | ØT MIN | ØG MIN | ØH MAX | E MAX | F MAX | K ±0,5 |
|---|---|---|---|---|---|---|---|---|---|---|
| 09 | M12 x 1.0 | 18,0 | 12,0 | 33,3 | 6,7 | 6,9 | 18,4 | 21,1 | 35,2 | 15,5 |
| 11 | M15 x 1.0 | 21,0 | 12,5 | 34,5 | 10,2 | 9,6 | 22,0 | 24,2 | 37,0 | 17,3 |
| 13 | M18 x 1.0 | 24,5 | 13,1 | 34,9 | 13,5 | 12,7 | 24,0 | 27,4 | 38,5 | 18,7 |
| 15 | M22 x 1.0 | 29,0 | 13,5 | 35,8 | 16,2 | 14,8 | 27,0 | 31,2 | 40,0 | 21,3 |
| 17 | M25 x 1.0 | 32,5 | 14,5 | 36,6 | 19,4 | 17,9 | 29,5 | 34,3 | 41,2 | 22,8 |
| 19 | M28 x 1.0 | 35,5 | 15,5 | 36,6 | 21,8 | 19,9 | 33,9 | 37,1 | 43,3 | 24,4 |
| 21 | M31 x 1.0 | 37,0 | 16,0 | 37,7 | 25,1 | 23,1 | 37,0 | 39,4 | 44,9 | 25,1 |
| 23 | M34 x 1.0 | 40,0 | 16,5 | 38,1 | 28,2 | 26,2 | 40,8 | 42,5 | 46,4 | 26,6 |
| 25 | M37 x 1.0 | 43,5 | 17,1 | 39,0 | 31,4 | 28,8 | 43,0 | 45,6 | 47,9 | 28,1 |

308H1-17-2-Z

- SERIES
- CONNECTOR INTERFACE
- ANGLE
- SHELL SIZE (TABLE 1)
- MATERIAL
  - NICKEL ALUMINIUM BRONZE
- FINISH
  - SHOT BLAST

CONE TERMINATION

**For tooling and assembly instructions see www.polamco.com**

Backshell supplied with Cone(s)
Sealing and strain relief achieved with Heat Shrink Boot for non CC versions (see page 354)
Adhesive if required for assembly (see page 352)
Screenbraid for EMC/RFI screening (see page 350)

DRAWING NOT TO SCALE, DIMENSIONS IN MM

SEE PAGES 18-26 FOR COMPLETE LIST OF AVAILABLE MATERIALS, FINISHES AND CONNECTOR INTERFACES
(DIMENSIONS, FORM AND O RING SUBJECT TO CHANGE DEPENDING ON BACKSHELL MATERIAL AND CONNECTOR INTERFACE)

THIS DRAWING IS THE PROPERTY OF POLAMCO LTD AND MUST NOT BE USED FOR COMMERCIAL PURPOSES WITHOUT WRITTEN CONSENT OF THE COMPANY

# 318F - Triple Cone Termination

## Interface F - MIL-DTL-38999 SERIES I

Polamco

**Interconnect Solutions Worldwide**

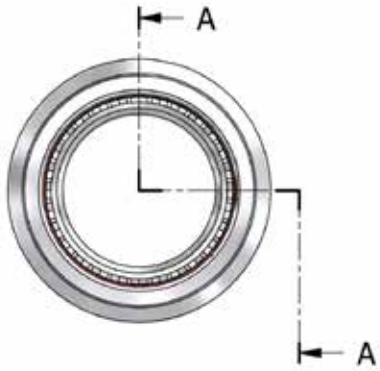


A-A

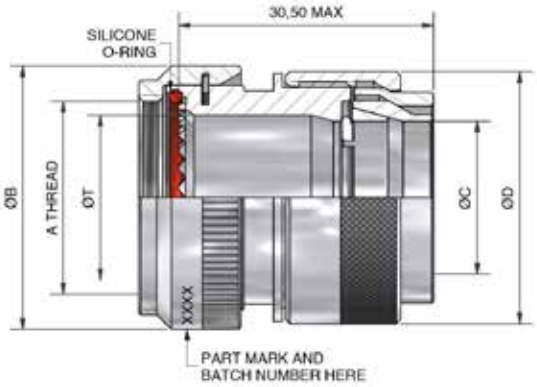


TABLE 1

| SHELL SIZE | A THREAD | ØB MAX | ØT MIN | ØC MIN | ØD MAX |
|---|---|---|---|---|---|
| 09 | 7/16-28UNEF | 18,0 | 6,8 | 6,9 | 18,4 |
| 11 | 9/16-24UNEF | 21,0 | 10,2 | 9,6 | 22,0 |
| 13 | 11/16-24UNEF | 24,5 | 13,1 | 12,7 | 24,0 |
| 15 | 13/16-20UNEF | 27,8 | 16,2 | 14,8 | 27,0 |
| 17 | 15/16-20UNEF | 30,8 | 19,3 | 17,9 | 29,5 |
| 19 | 1 1/16-18UNEF | 34,1 | 22,3 | 19,9 | 33,9 |
| 21 | 1 3/16-18UNEF | 37,3 | 25,8 | 23,1 | 37,0 |
| 23 | 1 5/16-18UNEF | 41,0 | 28,3 | 26,2 | 40,8 |
| 25 | 1 7/16-18UNEF | 43,7 | 31,5 | 28,8 | 43,0 |

TABLE 2

| CODE | MATERIAL / PLATING |
|---|---|
| 1-C | ALUMINIUM / ELECTROLESS NICKEL |
| 1-B | ALUMINIUM / CADMIUM OLIVE DRAB OVER ELECTROLESS NICKEL |
| 1-ZB | ALUMINIUM / ZINC COBALT OLIVE DRAB OVER ELECTROLESS NICKEL |
| 1-ZN | ALUMINIUM / ZINC NICKEL BLACK PASSIVATE OVER ELECTROLESS NICKEL |
| 4-J | STAINLESS STEEL / PASSIVATE |
| 2-Z | NICKEL ALUMINIUM BRONZE / SHOT BLAST |

LIST NOT EXHAUSTIVE, SEE PLATING TABLE FOR OTHER OPTIONS

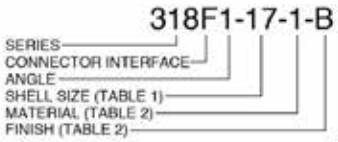


**For tooling and assembly instructions see www.polamco.com**

Backshell supplied with Cone(s)
Sealing and strain relief achieved with Heat Shrink Boot for non CC versions (see page 354)
Adhesive if required for assembly (see page 352)
Screenbraid for EMC/RFI screening (see page 350)

DRAWING NOT TO SCALE, DIMENSIONS IN MM

SEE PAGES 18-26 FOR COMPLETE LIST OF AVAILABLE MATERIALS, FINISHES AND CONNECTOR INTERFACES
(DIMENSIONS, FORM AND O RING SUBJECT TO CHANGE DEPENDING ON BACKSHELL MATERIAL AND CONNECTOR INTERFACE)





THIS DRAWING IS THE PROPERTY OF POLAMCO LTD AND MUST NOT BE USED FOR COMMERCIAL PURPOSES WITHOUT WRITTEN CONSENT OF THE COMPANY

# 318F - Triple Cone Termination

## Interface F - MIL-DTL-38999 SERIES II

Polamco

**Interconnect Solutions Worldwide**

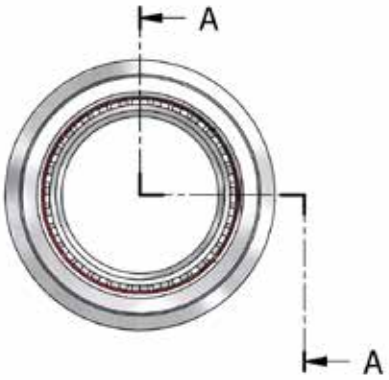


A-A

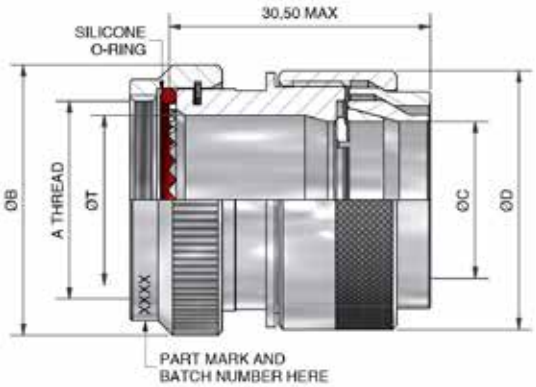


TABLE 1

| SHELL SIZE | A THREAD | ØB MAX | ØT MIN | ØC MIN | ØD MAX |
|---|---|---|---|---|---|
| 08 | 7/16-28UNEF | 18,3 | 6,6 | 6,9 | 18,4 |
| 10 | 9/16-24UNEF | 21,5 | 10,1 | 9,6 | 22,0 |
| 12 | 11/16-24UNEF | 24,5 | 12,9 | 12,7 | 24,0 |
| 14 | 13/16-20UNEF | 27,8 | 16,1 | 14,8 | 27,0 |
| 16 | 15/16-20UNEF | 30,8 | 19,3 | 17,9 | 29,5 |
| 18 | 1 1/16-18UNEF | 34,1 | 21,7 | 19,9 | 33,9 |
| 20 | 1 3/16-18UNEF | 37,3 | 24,9 | 23,1 | 37,0 |
| 22 | 1 5/16-18UNEF | 40,5 | 28,1 | 26,2 | 40,8 |
| 24 | 1 7/16-18UNEF | 43,7 | 31,3 | 28,8 | 43,0 |

TABLE 2

| CODE | MATERIAL / PLATING |
|---|---|
| 1-C | ALUMINIUM / ELECTROLESS NICKEL |
| 1-B | ALUMINIUM / CADMIUM OLIVE DRAB OVER ELECTROLESS NICKEL |
| 1-ZB | ALUMINIUM / ZINC COBALT OLIVE DRAB OVER ELECTROLESS NICKEL |
| 1-ZN | ALUMINIUM / ZINC NICKEL BLACK PASSIVATE OVER ELECTROLESS NICKEL |
| 4-J | STAINLESS STEEL / PASSIVATE |
| 2-Z | NICKEL ALUMINIUM BRONZE / SHOT BLAST |

LIST NOT EXHAUSTIVE, SEE PLATING TABLE FOR OTHER OPTIONS

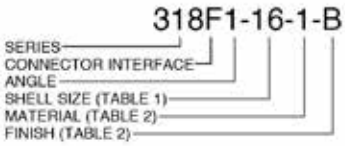


**For tooling and assembly instructions see www.polamco.com**

Backshell supplied with Cone(s)
Sealing and strain relief achieved with Heat Shrink Boot for non CC versions (see page 354)
Adhesive if required for assembly (see page 352)
Screenbraid for EMC/RFI screening (see page 350)

DRAWING NOT TO SCALE, DIMENSIONS IN MM

SEE PAGES 18-26 FOR COMPLETE LIST OF AVAILABLE MATERIALS, FINISHES AND CONNECTOR INTERFACES
(DIMENSIONS, FORM AND O RING SUBJECT TO CHANGE DEPENDING ON BACKSHELL MATERIAL AND CONNECTOR INTERFACE)

THIS DRAWING IS THE PROPERTY OF POLAMCO LTD AND MUST NOT BE USED FOR COMMERCIAL PURPOSES WITHOUT WRITTEN CONSENT OF THE COMPANY

# 318H - Triple Cone Termination

## Interface H - MIL-DTL-38999 SERIES III & IV

Polamco

**Interconnect Solutions Worldwide**

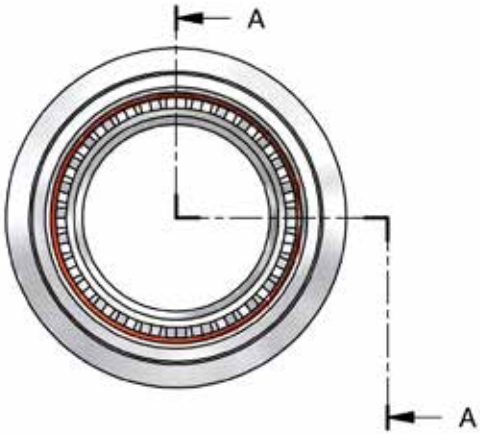


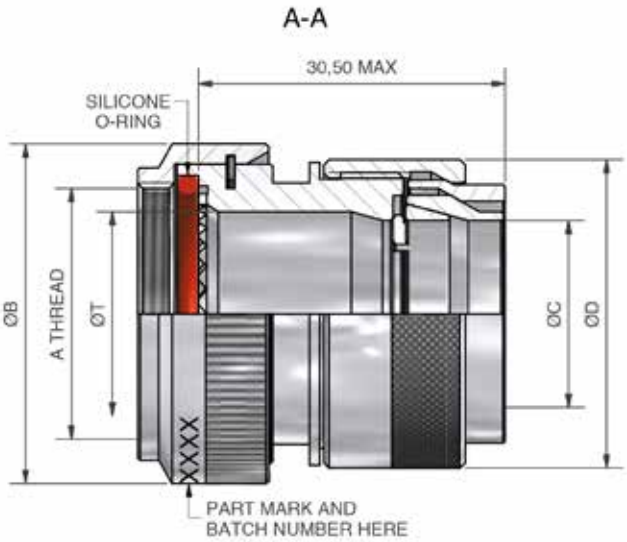


CONE TERMINATION

DRAWING NOT TO SCALE, DIMENSIONS IN MM

SEE PAGES 18-26 FOR COMPLETE LIST OF AVAILABLE MATERIALS, FINISHES AND CONNECTOR INTERFACES
(DIMENSIONS, FORM AND O RING SUBJECT TO CHANGE DEPENDING ON BACKSHELL MATERIAL AND CONNECTOR INTERFACE)



THIS DRAWING IS THE PROPERTY OF POLAMCO LTD AND MUST NOT BE USED FOR COMMERCIAL PURPOSES WITHOUT WRITTEN CONSENT OF THE COMPANY

# 318H - Triple Cone Termination

## Interface H - MIL-DTL-38999 SERIES III & IV

Polamco

**Interconnect Solutions Worldwide**

TABLE 1

| SHELL SIZE | A THREAD | ØB MAX | ØC MIN | ØD MAX |
|---|---|---|---|---|
| 09 | M12 x 1.0 | 18,0 | 6,9 | 18,4 |
| 11 | M15 x 1.0 | 21,0 | 9,6 | 22,0 |
| 13 | M18 x 1.0 | 24,5 | 12,7 | 24,0 |
| 15 | M22 x 1.0 | 29,0 | 14,8 | 27,0 |
| 17 | M25 x 1.0 | 32,5 | 17,9 | 29,5 |
| 19 | M28 x 1.0 | 35,5 | 19,9 | 33,9 |
| 21 | M31 x 1.0 | 37,0 | 23,1 | 37,0 |
| 23 | M34 x 1.0 | 40,0 | 26,2 | 40,8 |
| 25 | M37 x 1.0 | 43,5 | 28,8 | 43,0 |

TABLE 3

| CODE | MATERIAL / PLATING |
|---|---|
| 1-C | ALUMINIUM / ELECTROLESS NICKEL |
| 1-B | ALUMINIUM / CADMIUM OLIVE DRAB OVER ELECTROLESS NICKEL |
| 1-ZB | ALUMINIUM / ZINC COBALT OLIVE DRAB OVER ELECTROLESS NICKEL |
| 1-ZN | ALUMINIUM / ZINC NICKEL BLACK PASSIVATE OVER ELECTROLESS NICKEL |
| 4-J | STAINLESS STEEL / PASSIVATE |
| 2-Z | NICKEL ALUMINIUM BRONZE / SHOT BLAST |

LIST NOT EXHAUSTIVE, SEE PLATING TABLE FOR OTHER OPTIONS

318H1-17-1-B

- SERIES
- CONNECTOR INTERFACE
- ANGLE (1 - STRAIGHT)
- SHELL SIZE (TABLE 1)
- MATERIAL (TABLE 2)
- FINISH (TABLE 2)

CONE TERMINATION

**For tooling and assembly instructions see www.polamco.com**

Backshell supplied with Cone(s)
Sealing and strain relief achieved with Heat Shrink Boot for non CC versions (see page 354)
Adhesive if required for assembly (see page 352)
Screenbraid for EMC/RFI screening (see page 350)

DRAWING NOT TO SCALE, DIMENSIONS IN MM

SEE PAGES 18-26 FOR COMPLETE LIST OF AVAILABLE MATERIALS, FINISHES AND CONNECTOR INTERFACES
(DIMENSIONS, FORM AND O RING SUBJECT TO CHANGE DEPENDING ON BACKSHELL MATERIAL AND CONNECTOR INTERFACE)

THIS DRAWING IS THE PROPERTY OF POLAMCO LTD AND MUST NOT BE USED FOR
COMMERCIAL PURPOSES WITHOUT WRITTEN CONSENT OF THE COMPANY

# PVG1CH1 - Cone Termination

## Interface H - MIL-DTL-38999 SERIES III & IV

Polamco

**Interconnect Solutions Worldwide**

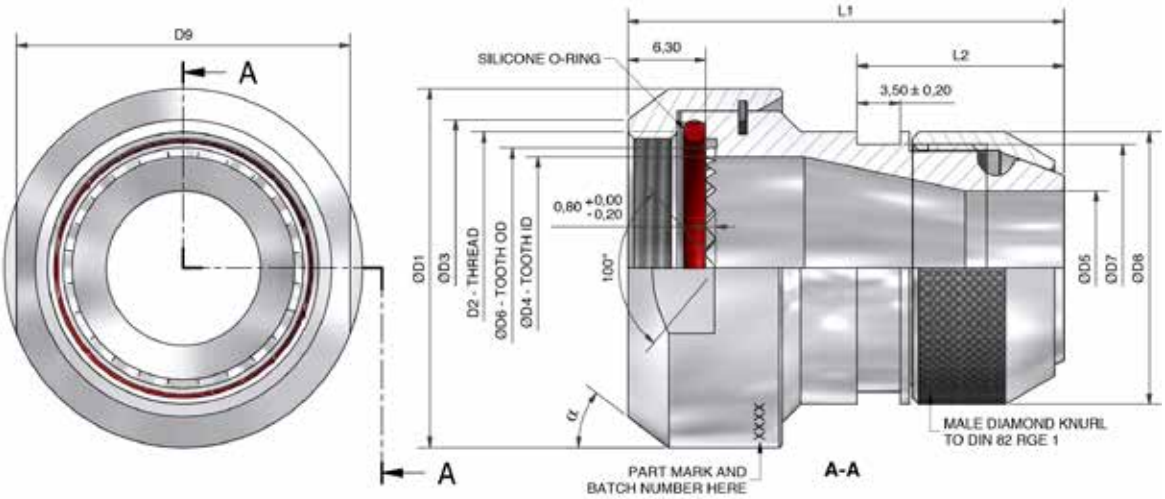


### VG PART NUMBERING

**VG95319-1011C001A**

- VG SERIES
- DASH NUMBER
- MATERIAL AND FINISH OPTION
  - A = ALUMINIUM ALLOY - OLIVE DRAB OVER ELECTROLESS NICKEL
  - B = ALUMINIUM BRONZE - SHOT BLAST
  - S = STAINLESS STEEL - PASSIVATED

### POLAMCO PART NUMBERING

**PVG1CH1-001-1-B**

- POLAMCO SERIES
- INTERFACE
- ANGLE (1 = STRAIGHT)
- DASH NUMBER (TABLE 1)
- MATERIAL
- FINISH (TABLE 2)

ANY OPTIONS OUTSIDE THOSE POSSIBLE WITH VG PART NUMBER ARE AVAILABLE BUT WILL NOT BE VG APPROVED PARTS. FOR FULL LIST OF MATERIAL AND PLATING OPTIONS PLEASE VISIT OUR WEBSITE

TABLE 1

| DASH NO. | SHELL SIZE | ØD1 ±0,2 | D2 | ØD3 +0,2/-0,1 | ØD4 +0,2/-0 | ØD5 MIN | ØD6 +0,2/-0 | ØD7 +0/-0,3 | ØD8 +0,5/-0 | L1 MAX | L2 MAX |
|---|---|---|---|---|---|---|---|---|---|---|---|
| 001 | 09 | 19,0 | M12 X 1 | 14,25 | 8,5 | 6,2 | 10,8 | 12,0 | 14,0 | 34,0 | 16,2 |
| 002 | 11 | 22,0 | M15 X 1 | 17,00 | 12,0 | 7,0 | 13,8 | 14,0 | 16,0 | 35,0 | 17,2 |
| 003 | 11 | 22,0 | M15 X 1 | 17,00 | 12,0 | 9,5 | 13,8 | 16,0 | 18,0 | 35,0 | 17,2 |
| 004 | 11 | 22,0 | M15 X 1 | 17,00 | 12,0 | 12,5 | 13,8 | 20,0 | 22,0 | 36,0 | 18,2 |
| 005 | 13 | 25,0 | M18 X 1 | 20,00 | 13,8 | 9,5 | 16,8 | 16,0 | 18,0 | 35,0 | 17,2 |
| 006 | 15 | 29,0 | M22 X 1 | 24,00 | 18,0 | 12,5 | 20,8 | 20,0 | 22,0 | 36,0 | 18,2 |
| 007 | 15 | 29,0 | M22 X 1 | 24,00 | 18,0 | 9,5 | 20,8 | 16,0 | 18,0 | 36,0 | 18,2 |
| 008 | 15 | 29,0 | M22 X 1 | 24,00 | 18,0 | 15,5 | 20,8 | 23,0 | 25,0 | 36,0 | 18,2 |
| 009 | 17 | 32,0 | M25 X 1 | 27,00 | 21,1 | 15,5 | 23,8 | 23,0 | 25,0 | 36,0 | 18,2 |
| 010 | 17 | 32,0 | M25 X 1 | 27,00 | 21,1 | 7,0 | 23,8 | 14,0 | 16,0 | 35,0 | 17,2 |
| 011 | 19 | 36,0 | M28 X 1 | 30,00 | 24,1 | 18,5 | 26,8 | 24,5 | 26,0 | 36,0 | 18,2 |
| 012 | 21 | 39,0 | M31 X 1 | 33,00 | 27,1 | 21,5 | 29,8 | 28,5 | 32,0 | 36,0 | 18,2 |
| 013 | 23 | 43,0 | M34 X 1 | 36,00 | 30,1 | 23,5 | 32,8 | 30,5 | 34,0 | 36,0 | 18,2 |
| 014 | 23 | 43,0 | M34 X 1 | 36,00 | 30,1 | 15,5 | 32,8 | 23,0 | 25,0 | 36,0 | 18,2 |
| 015 | 25 | 46,0 | M37 X 1 | 39,00 | 33,3 | 27,5 | 35,8 | 34,0 | 38,0 | 36,0 | 18,2 |

| DASH NO. | SHELL SIZE | α ±1° | D9 +0/-0,2 | NO. OF TEETH | MASS (g) MAX |
|---|---|---|---|---|---|
| 001 | 09 | 35° | 17,0 | 12 | 12,0 |
| 002 | 11 | 37° | 20,0 | 16 | 15,0 |
| 003 | 11 | 37° | 20,0 | 16 | 17,0 |
| 004 | 11 | 37° | 20,0 | 16 | 17,0 |
| 005 | 13 | 37° | 23,0 | 20 | 18,0 |
| 006 | 15 | 37° | 27,0 | 24 | 23,0 |
| 007 | 15 | 37° | 27,0 | 24 | 23,0 |
| 008 | 15 | 37° | 27,0 | 24 | 25,0 |
| 009 | 17 | 37° | 30,0 | 28 | 27,0 |
| 010 | 17 | 37° | 30,0 | 28 | 25,0 |
| 011 | 19 | 40° | 34,0 | 32 | 35,0 |
| 012 | 21 | 40° | 37,0 | 36 | 42,0 |
| 013 | 23 | 40° | 41,0 | 40 | 45,0 |
| 014 | 23 | 40° | 41,0 | 40 | 43,0 |
| 015 | 25 | 40° | 44,0 | 44 | 52,0 |

TABLE 2

| CODE | FINISH |
|---|---|
| C | ELECTROLESS NICKEL |
| B | CADMIUM OLIVE DRAB OVER ELECTROLESS NICKEL |
| ZB | ZINC COBALT OLIVE DRAB OVER ELECTROLESS NICKEL |
| ZN | ZINC NICKEL BLACK PASSIVATE OVER ELECTROLESS NICKEL |

LIST NOT EXHAUSTIVE, SEE PLATING TABLE FOR OTHER OPTIONS

**For tooling and assembly instructions see www.polamco.com**

Backshell supplied with Cone(s)
Sealing and strain relief achieved with Heat Shrink Boot for non CC versions (see page 354)
Adhesive if required for assembly (see page 352)
Screenbraid for EMC/RFI screening (see page 350)

DRAWING NOT TO SCALE, DIMENSIONS IN MM

SEE PAGES 18-26 FOR COMPLETE LIST OF AVAILABLE MATERIALS, FINISHES AND CONNECTOR INTERFACES
(DIMENSIONS, FORM AND O RING SUBJECT TO CHANGE DEPENDING ON BACKSHELL MATERIAL AND CONNECTOR INTERFACE)





THIS DRAWING IS THE PROPERTY OF POLAMCO LTD AND MUST NOT BE USED FOR COMMERCIAL PURPOSES WITHOUT WRITTEN CONSENT OF THE COMPANY

# PVG1FH1 - Cone Termination

## Interface H - MIL-DTL-38999 SERIES III & IV

Polamco

**Interconnect Solutions Worldwide**

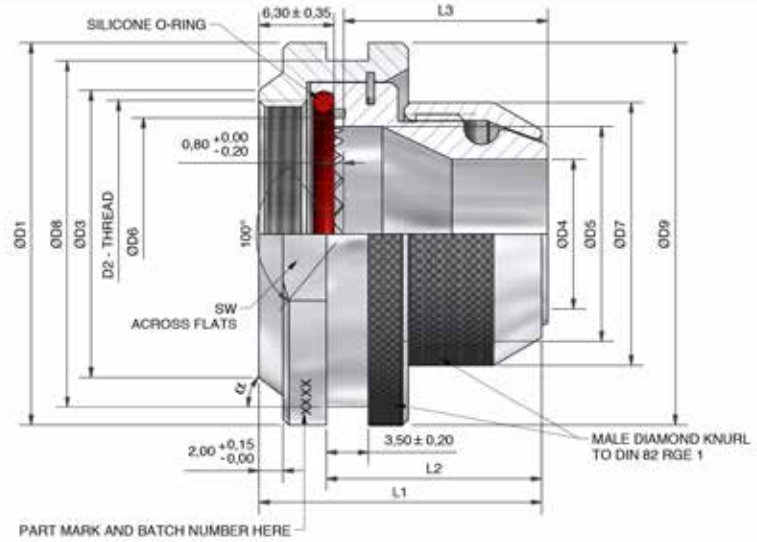


### VG PART NUMBERING

**VG95319-1011F001A**

- VG SERIES
- DASH NUMBER
- MATERIAL AND FINISH OPTION
  - A = ALUMINIUM ALLOY - OLIVE DRAB OVER ELECTROLESS NICKEL
  - B = ALUMINIUM BRONZE - SHOT BLAST
  - S = STAINLESS STEEL - PASSIVATED

### POLAMCO PART NUMBERING

**PVG1FH1-001-1-B**

- POLAMCO SERIES
- INTERFACE
- ANGLE (1 = STRAIGHT)
- DASH NUMBER (TABLE 1)
- MATERIAL
- FINISH (TABLE 2)

ANY OPTIONS OUTSIDE THOSE POSSIBLE WITH VG PART NUMBER ARE AVAILABLE BUT WILL NOT BE VG APPROVED PARTS. FOR FULL LIST OF MATERIAL AND PLATING OPTIONS PLEASE VISIT OUR WEBSITE

TABLE 1

| DASH NO. | SHELL SIZE | ØD1 ±0,2 | D2 | ØD3 +0,2/-0,1 | ØD4 +0,2/-0 | ØD5 +0,2/-0 | ØD6 +0,2/-0 | ØD7 ±0,5 | ØD8 +0/-0,2 | ØD9 +0,5/-0 |
|---|---|---|---|---|---|---|---|---|---|---|
| 001 | 09 | 22,0 | M12 X 1 | 14,25 | 6,2 | 8,5 | 10,8 | 14,0 | 19,0 | 21,0 |
| 002 | 11 | 25,0 | M15 X 1 | 17,00 | 7,0 | 12,0 | 13,8 | 16,0 | 22,0 | 24,0 |
| 003 | 13 | 29,0 | M18 X 1 | 20,00 | 9,5 | 13,8 | 16,8 | 18,0 | 25,5 | 28,0 |
| 004 | 13 | 29,0 | M18 X 1 | 20,00 | 15,5 | 13,8 | 16,8 | 25,0 | 25,5 | 28,0 |
| 005 | 15 | 32,0 | M22 X 1 | 24,00 | 12,5 | 18,0 | 20,8 | 22,0 | 29,0 | 32,0 |
| 006 | 15 | 32,0 | M22 X 1 | 24,00 | 15,5 | 18,0 | 20,8 | 25,0 | 29,0 | 32,0 |
| 007 | 17 | 36,0 | M25 X 1 | 27,00 | 15,5 | 21,1 | 23,8 | 25,0 | 32,5 | 36,0 |
| 008 | 19 | 39,0 | M28 X 1 | 30,00 | 18,5 | 24,1 | 26,8 | 28,0 | 35,5 | 39,0 |
| 009 | 19 | 39,0 | M28 X 1 | 30,00 | 15,5 | 24,1 | 26,8 | 25,0 | 35,5 | 39,0 |
| 010 | 21 | 42,0 | M31 X 1 | 33,00 | 21,0 | 27,1 | 29,8 | 32,0 | 38,5 | 42,0 |
| 011 | 23 | 45,0 | M34 X 1 | 36,00 | 23,5 | 30,1 | 32,8 | 34,0 | 42,0 | 45,5 |
| 012 | 25 | 49,0 | M37 X 1 | 39,00 | 27,5 | 33,3 | 35,8 | 38,0 | 45,5 | 49,0 |

| DASH NO. | SHELL SIZE | L1 ±0,5 | L2 +0/-1 | L3 ±0,5 | α ±1° | SW +0/-0,2 | NO. OF TEETH | MASS (g) MAX |
|---|---|---|---|---|---|---|---|---|
| 001 | 09 | 23,0 | 18,0 | 16,0 | 35° | 20,0 | 12,0 | 12,0 |
| 002 | 11 | 23,0 | 18,0 | 16,0 | 37° | 23,0 | 16,0 | 15,0 |
| 003 | 13 | 24,0 | 19,0 | 17,0 | 37° | 27,0 | 20,0 | 18,0 |
| 004 | 13 | 23,0 | 18,0 | 16,0 | 37° | 27,0 | 20,0 | 22,0 |
| 005 | 15 | 24,0 | 19,0 | 17,0 | 37° | 30,0 | 24,0 | 22,0 |
| 006 | 15 | 24,0 | 19,0 | 17,0 | 37° | 30,0 | 24,0 | 22,0 |
| 007 | 17 | 24,0 | 19,0 | 17,0 | 37° | 34,0 | 28,0 | 27,0 |
| 008 | 19 | 24,0 | 19,0 | 17,0 | 40° | 37,0 | 32,0 | 30,0 |
| 009 | 19 | 25,0 | 20,0 | 18,0 | 40° | 37,0 | 32,0 | 30,0 |
| 010 | 21 | 24,0 | 19,0 | 17,0 | 40° | 40,0 | 36,0 | 40,0 |
| 011 | 23 | 24,0 | 19,0 | 17,0 | 40° | 43,0 | 40,0 | 45,0 |
| 012 | 25 | 24,0 | 19,0 | 17,0 | 40° | 47,0 | 44,0 | 50,0 |

TABLE 2

| CODE | FINISH |
|---|---|
| C | ELECTROLESS NICKEL |
| B | CADMIUM OLIVE DRAB OVER ELECTROLESS NICKEL |
| ZB | ZINC COBALT OLIVE DRAB OVER ELECTROLESS NICKEL |
| ZN | ZINC NICKEL BLACK PASSIVATE OVER ELECTROLESS NICKEL |

LIST NOT EXHAUSTIVE, SEE PLATING TABLE FOR OTHER OPTIONS

**For tooling and assembly instructions see www.polamco.com**

Backshell supplied with Cone(s)
Sealing and strain relief achieved with Heat Shrink Boot for non CC versions (see page 354)
Adhesive if required for assembly (see page 352)
Screenbraid for EMC/RFI screening (see page 350)

DRAWING NOT TO SCALE, DIMENSIONS IN MM

SEE PAGES 18-26 FOR COMPLETE LIST OF AVAILABLE MATERIALS, FINISHES AND CONNECTOR INTERFACES
(DIMENSIONS, FORM AND O RING SUBJECT TO CHANGE DEPENDING ON BACKSHELL MATERIAL AND CONNECTOR INTERFACE)



THIS DRAWING IS THE PROPERTY OF POLAMCO LTD AND MUST NOT BE USED FOR COMMERCIAL PURPOSES WITHOUT WRITTEN CONSENT OF THE COMPANY

# 64F - Cone Clamp Termination

## Interface F - MIL-DTL-38999 SERIES I

Polamco

**Interconnect Solutions Worldwide**

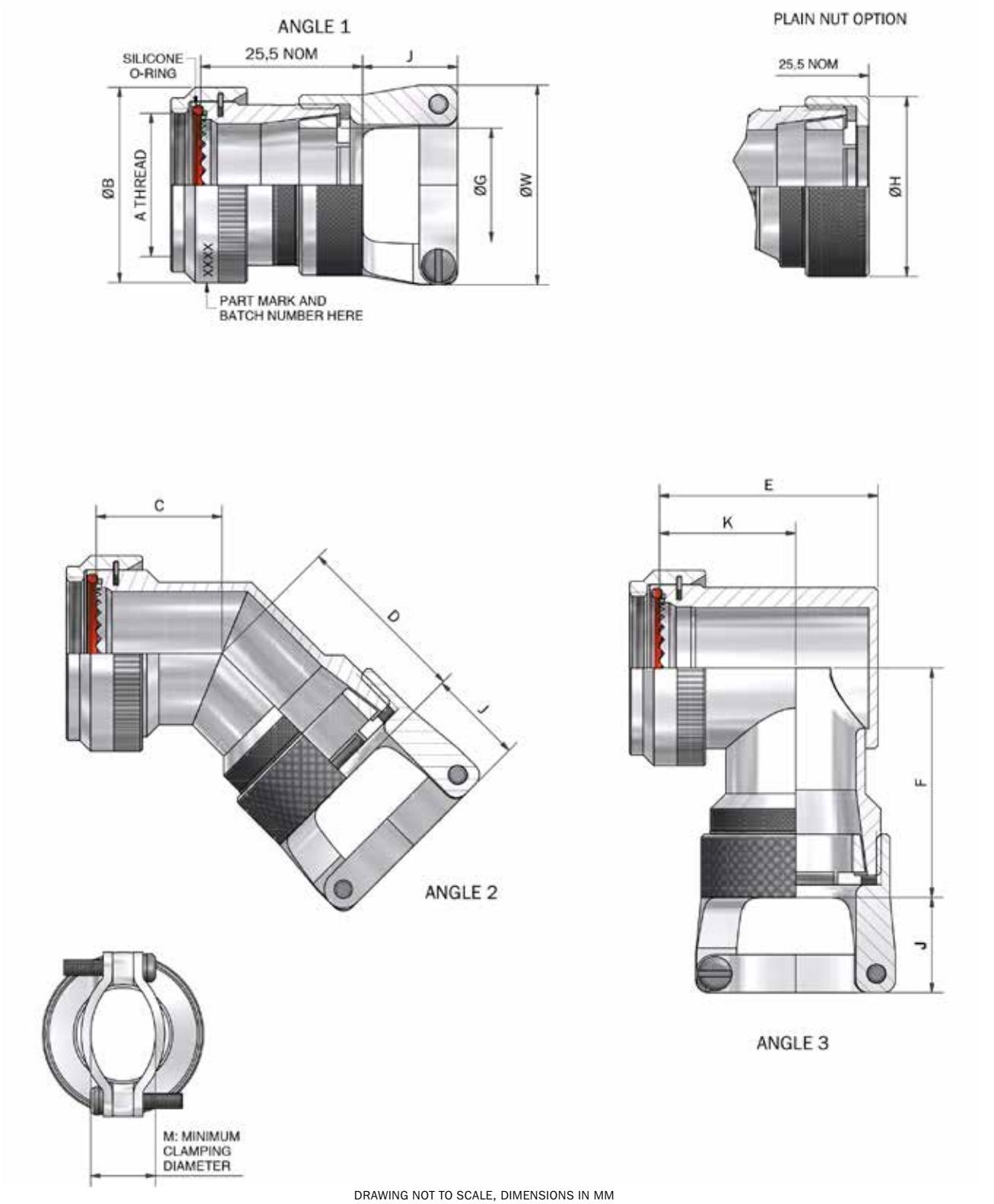


DRAWING NOT TO SCALE, DIMENSIONS IN MM

SEE PAGES 18-26 FOR COMPLETE LIST OF AVAILABLE MATERIALS, FINISHES AND CONNECTOR INTERFACES
(DIMENSIONS, FORM AND O RING SUBJECT TO CHANGE DEPENDING ON BACKSHELL MATERIAL AND CONNECTOR INTERFACE)





THIS DRAWING IS THE PROPERTY OF POLAMCO LTD AND MUST NOT BE USED FOR COMMERCIAL PURPOSES WITHOUT WRITTEN CONSENT OF THE COMPANY

# 64F - Cone Clamp Termination

## Interface F - MIL-DTL-38999 SERIES I

Polamco

**Interconnect Solutions Worldwide**

TABLE 1

| SHELL SIZE | A THREAD | ØB MAX | C ±0,5 | D MAX | E MAX | F MAX | ØG MIN | ØW MAX | ØH MAX | J MAX | K ±0,5 | M ±0,5 |
|---|---|---|---|---|---|---|---|---|---|---|---|---|
| 09 | 7/16-28 UNEF | 18,0 | 16,4 | 24,6 | 22,7 | 30,1 | 6,6 | 20,7 | 16,0 | 15,2 | 15,0 | 7,8 |
| 11 | 9/16-24 UNEF | 21,0 | 17,2 | 25,4 | 26,2 | 31,9 | 9,3 | 23,8 | 19,0 | 15,2 | 17,0 | 8,6 |
| 13 | 11/16-24 UNEF | 24,5 | 17,6 | 26,3 | 29,2 | 33,4 | 12,6 | 27,0 | 22,0 | 15,2 | 18,0 | 10,2 |
| 15 | 13/16-20 UNEF | 27,8 | 18,5 | 26,7 | 32,2 | 34,9 | 14,6 | 28,6 | 25,4 | 15,2 | 20,0 | 10,4 |
| 17 | 15/16-20 UNEF | 30,8 | 19,2 | 27,5 | 35,7 | 36,6 | 17,7 | 31,8 | 28,5 | 15,2 | 21,5 | 12,4 |
| 19 | 1 1/16-18 UNEF | 34,1 | 19,6 | 27,8 | 39,7 | 38,2 | 19,8 | 35,0 | 32,0 | 18,2 | 23,0 | 15,4 |
| 21 | 1 3/16-18 UNEF | 37,3 | 20,4 | 28,6 | 42,2 | 39,8 | 23,0 | 38,1 | 35,0 | 18,2 | 25,0 | 17,3 |
| 23 | 1 5/16-18 UNEF | 41,0 | 20,8 | 29,5 | 45,2 | 41,3 | 26,2 | 39,7 | 38,0 | 18,2 | 26,0 | 18,8 |
| 25 | 1 7/16-18 UNEF | 43,7 | 21,7 | 29,9 | 48,2 | 42,8 | 29,1 | 44,5 | 41,0 | 18,2 | 28,0 | 22,4 |

TABLE 2

| CODE | FINISH |
|---|---|
| C | ELECTROLESS NICKEL |
| B | CADMIUM OLIVE DRAB OVER ELECTROLESS NICKEL |
| ZB | ZINC COBALT OLIVE DRAB OVER ELECTROLESS NICKEL |
| ZN | ZINC NICKEL BLACK PASSIVATE OVER ELECTROLESS NICKEL |

LIST NOT EXHAUSTIVE, SEE PLATING TABLE FOR OTHER OPTIONS

64F1-17-1-C-CC

- SERIES
- CONNECTOR INTERFACE
- ANGLE
- SHELL SIZE (TABLE 1)
- MATERIAL
  - ALUMINIUM ALLOY
- FINISH (TABLE 2)
- CABLE CLAMP OPTION
  - OMIT FOR PLAIN NUT

CONE TERMINATION

**For tooling and assembly instructions see www.polamco.com**

Backshell supplied with Cone(s)
Sealing and strain relief achieved with Heat Shrink Boot for non CC versions (see page 354)
Adhesive if required for assembly (see page 352)
Screenbraid for EMC/RFI screening (see page 350)

DRAWING NOT TO SCALE, DIMENSIONS IN MM

SEE PAGES 18-26 FOR COMPLETE LIST OF AVAILABLE MATERIALS, FINISHES AND CONNECTOR INTERFACES
(DIMENSIONS, FORM AND O RING SUBJECT TO CHANGE DEPENDING ON BACKSHELL MATERIAL AND CONNECTOR INTERFACE)

THIS DRAWING IS THE PROPERTY OF POLAMCO LTD AND MUST NOT BE USED FOR
COMMERCIAL PURPOSES WITHOUT WRITTEN CONSENT OF THE COMPANY

# 64F - Cone Clamp Termination

## Interface F - MIL-DTL-38999 SERIES II

Polamco

**Interconnect Solutions Worldwide**

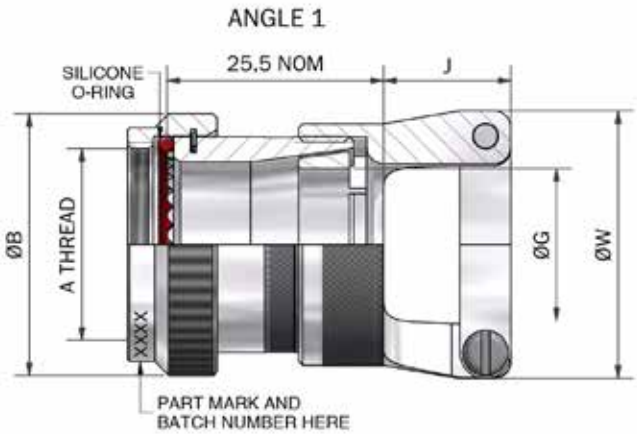

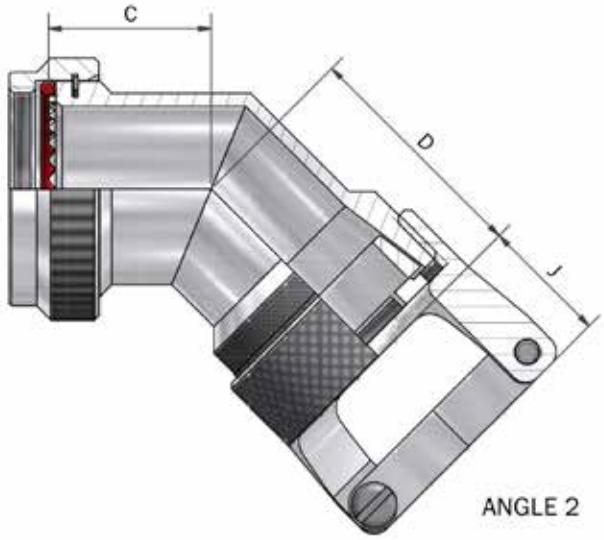


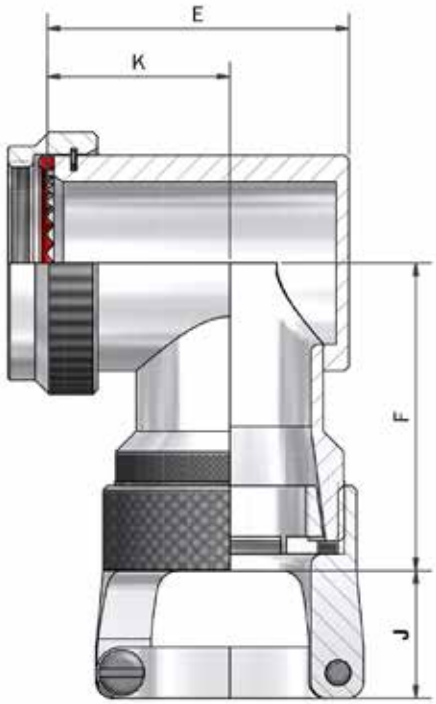

DRAWING NOT TO SCALE, DIMENSIONS IN MM

SEE PAGES 18-26 FOR COMPLETE LIST OF AVAILABLE MATERIALS, FINISHES AND CONNECTOR INTERFACES
(DIMENSIONS, FORM AND O RING SUBJECT TO CHANGE DEPENDING ON BACKSHELL MATERIAL AND CONNECTOR INTERFACE)





THIS DRAWING IS THE PROPERTY OF POLAMCO LTD AND MUST NOT BE USED FOR COMMERCIAL PURPOSES WITHOUT WRITTEN CONSENT OF THE COMPANY

# 64F - Cone Clamp Termination

## Interface F - MIL-DTL-38999 SERIES II

Polamco

**Interconnect Solutions Worldwide**

TABLE 1

| SHELL SIZE | A THREAD | B MAX | C ±0,5 | D MAX | E MAX | F MAX | ØG MIN | ØW MAX | ØH MAX | J MAX | K ±0,5 | M ±0,5 |
|---|---|---|---|---|---|---|---|---|---|---|---|---|
| 08 | 7/16-28 UNEF | 18,3 | 16,4 | 24,6 | 22,7 | 30.1 | 6,6 | 20,7 | 16,0 | 15,2 | 15,0 | 7,8 |
| 10 | 9/16-24 UNEF | 21,5 | 17,2 | 25,4 | 26,2 | 31.9 | 9,3 | 23,8 | 19,0 | 15,2 | 17,0 | 8,6 |
| 12 | 11/16-24 UNEF | 24,5 | 17,6 | 26,3 | 29,2 | 33.4 | 12,6 | 27,0 | 22,0 | 15,2 | 18,0 | 10,2 |
| 14 | 13/16-20 UNEF | 27,8 | 18,5 | 26,7 | 32,2 | 34.9 | 14,6 | 28,6 | 25,4 | 15,2 | 20,0 | 10,4 |
| 16 | 15/16-20 UNEF | 30,8 | 19,2 | 27,5 | 35,7 | 36.6 | 17,7 | 31,8 | 28,5 | 15,2 | 21,5 | 12,4 |
| 18 | 1 1/16-18 UNEF | 34,1 | 19,6 | 27,8 | 39,7 | 38.2 | 19,8 | 35,0 | 32,0 | 18,2 | 23,0 | 15,4 |
| 20 | 1 3/16-18 UNEF | 37,3 | 20,4 | 28,6 | 42,2 | 39.8 | 23,0 | 38,1 | 35,0 | 18,2 | 25,0 | 17,3 |
| 22 | 1 5/16-18 UNEF | 40,5 | 20,8 | 29,5 | 45,2 | 41.3 | 26,2 | 39,7 | 38,0 | 18,2 | 26,0 | 18,8 |
| 24 | 1 7/16-18 UNEF | 43,7 | 21,7 | 29,9 | 48,2 | 42.8 | 29,1 | 44,5 | 41,0 | 18,2 | 28,0 | 22,4 |

TABLE 2

| CODE | FINISH |
|---|---|
| C | ELECTROLESS NICKEL |
| B | CADMIUM OLIVE DRAB OVER ELECTROLESS NICKEL |
| ZB | ZINC COBALT OLIVE DRAB OVER ELECTROLESS NICKEL |
| ZN | ZINC NICKEL BLACK PASSIVATE OVER ELECTROLESS NICKEL |

LIST NOT EXHAUSTIVE, SEE PLATING TABLE FOR OTHER OPTIONS

64F1-16-1-C-CC

- SERIES
- CONNECTOR INTERFACE
- ANGLE
- SHELL SIZE (TABLE 1)
- MATERIAL
  - ALUMINIUM ALLOY
- FINISH (TABLE 2)
- CABLE CLAMP OPTION
  - OMIT FOR PLAIN NUT

CONE TERMINATION

**For tooling and assembly instructions see www.polamco.com**

Backshell supplied with Cone(s)
Sealing and strain relief achieved with Heat Shrink Boot for non CC versions (see page 354)
Adhesive if required for assembly (see page 352)
Screenbraid for EMC/RFI screening (see page 350)

DRAWING NOT TO SCALE, DIMENSIONS IN MM

SEE PAGES 18-26 FOR COMPLETE LIST OF AVAILABLE MATERIALS, FINISHES AND CONNECTOR INTERFACES
(DIMENSIONS, FORM AND O RING SUBJECT TO CHANGE DEPENDING ON BACKSHELL MATERIAL AND CONNECTOR INTERFACE)

THIS DRAWING IS THE PROPERTY OF POLAMCO LTD AND MUST NOT BE USED FOR
COMMERCIAL PURPOSES WITHOUT WRITTEN CONSENT OF THE COMPANY

# 64H - Cone Clamp Termination

## Interface H - MIL-DTL-38999 SERIES III & IV

Polamco

**Interconnect Solutions Worldwide**

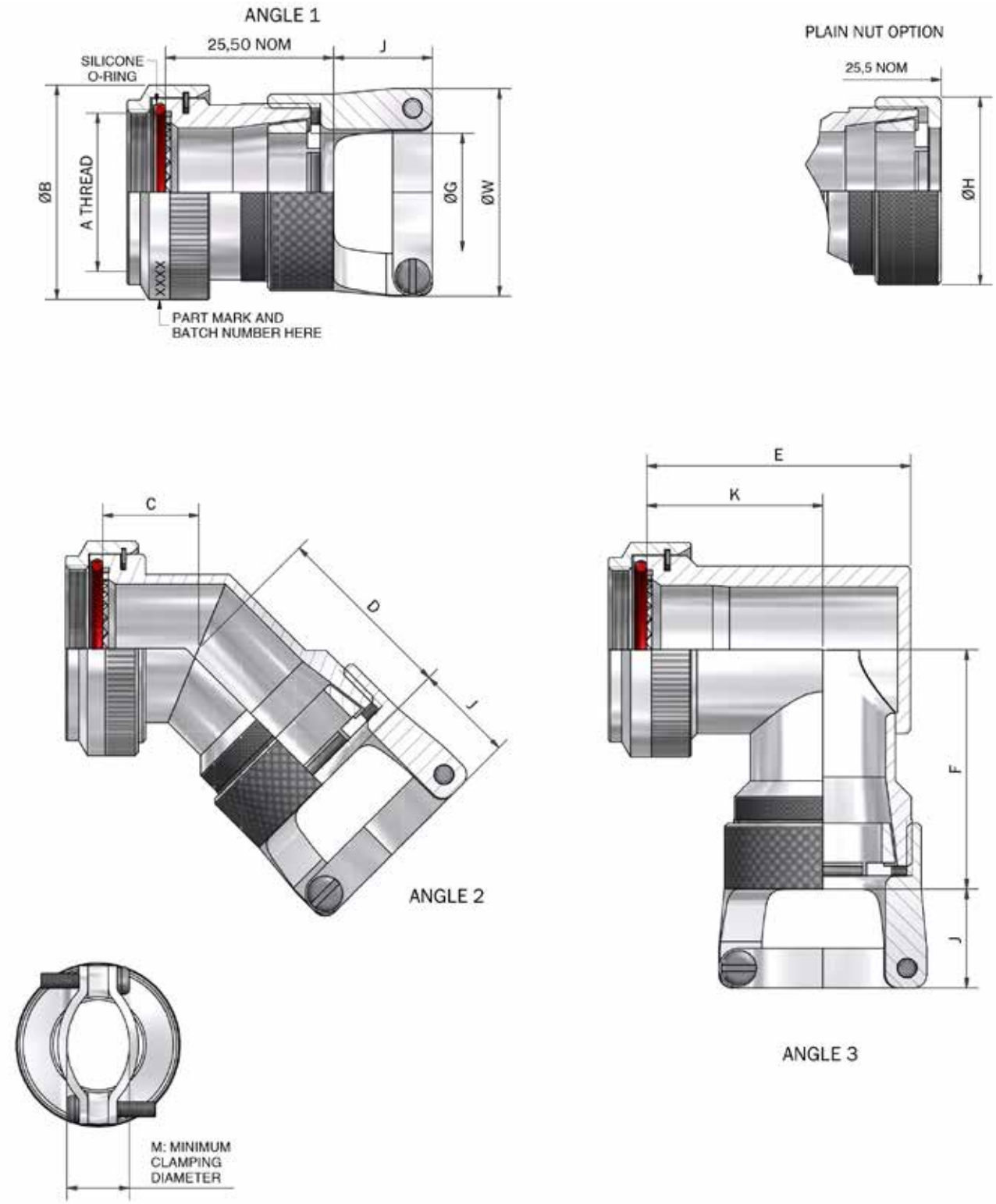


DRAWING NOT TO SCALE, DIMENSIONS IN MM

SEE PAGES 18-26 FOR COMPLETE LIST OF AVAILABLE MATERIALS, FINISHES AND CONNECTOR INTERFACES
(DIMENSIONS, FORM AND O RING SUBJECT TO CHANGE DEPENDING ON BACKSHELL MATERIAL AND CONNECTOR INTERFACE)





THIS DRAWING IS THE PROPERTY OF POLAMCO LTD AND MUST NOT BE USED FOR COMMERCIAL PURPOSES WITHOUT WRITTEN CONSENT OF THE COMPANY

# 64H - Cone Clamp Termination

## Interface H - MIL-DTL-38999 SERIES III & IV

Polamco

**Interconnect Solutions Worldwide**

TABLE 1

| SHELL SIZE | A THREAD | ØB MAX | C ±0,5 | D MAX | E MAX | F MAX | ØG MIN | ØW MAX | ØH MAX | J MAX | K ±0,5 | M ±0,5 |
|---|---|---|---|---|---|---|---|---|---|---|---|---|
| 09 | M12 x 1.0 | 18,0 | 13,1 | 24,6 | 25,7 | 30.1 | 6,6 | 20,7 | 16,0 | 15,2 | 17,5 | 7,8 |
| 11 | M15 x 1.0 | 21,0 | 13,9 | 25,4 | 26,7 | 31.9 | 9,3 | 23,8 | 19,0 | 15,2 | 17,5 | 8,6 |
| 13 | M18 x 1.0 | 24,5 | 14,5 | 26,3 | 31,2 | 33.4 | 12,6 | 27,0 | 22,0 | 15,2 | 20,0 | 10,2 |
| 15 | M22 x 1.0 | 29,0 | 15,5 | 26,7 | 37,2 | 34.9 | 14,6 | 28,6 | 26,5 | 15,2 | 24,5 | 10,4 |
| 17 | M25 x 1.0 | 32,5 | 16,1 | 27,5 | 40,2 | 36.6 | 17,7 | 31,8 | 29,8 | 15,2 | 26,7 | 12,4 |
| 19 | M28 x 1.0 | 35,5 | 16,8 | 27,8 | 44,7 | 38.2 | 19,8 | 35,0 | 33,0 | 18,2 | 27,0 | 15,4 |
| 21 | M31 x 1.0 | 37,0 | 17,1 | 28,6 | 49,2 | 39.8 | 23,0 | 38,1 | 35,0 | 18,2 | 30,5 | 17,3 |
| 23 | M34 x 1.0 | 40,0 | 17,7 | 29,5 | 51,7 | 41.3 | 26,2 | 39,7 | 38,0 | 18,2 | 31,5 | 18,8 |
| 25 | M37 x 1.0 | 43,5 | 18,4 | 29,9 | 53,2 | 42.8 | 29,1 | 44,5 | 41,0 | 18,2 | 28,5 | 22,4 |

TABLE 2

| CODE | FINISH |
|---|---|
| C | ELECTROLESS NICKEL |
| B | CADMIUM OLIVE DRAB OVER ELECTROLESS NICKEL |
| ZB | ZINC COBALT OLIVE DRAB OVER ELECTROLESS NICKEL |
| ZN | ZINC NICKEL BLACK PASSIVATE OVER ELECTROLESS NICKEL |

LIST NOT EXHAUSTIVE, SEE PLATING TABLE FOR OTHER OPTIONS

64H1-17-1-C-CC

SERIES
CONNECTOR INTERFACE
ANGLE
SHELL SIZE (TABLE 1)
MATERIAL
ALUMINIUM ALLOY
FINISH (TABLE 2)
CABLE CLAMP OPTION
OMIT FOR PLAIN NUT

CONE TERMINATION

**For tooling and assembly instructions see www.polamco.com**

Backshell supplied with Cone(s)
Sealing and strain relief achieved with Heat Shrink Boot for non CC versions (see page 354)
Adhesive if required for assembly (see page 352)
Screenbraid for EMC/RFI screening (see page 350)

DRAWING NOT TO SCALE, DIMENSIONS IN MM

SEE PAGES 18-26 FOR COMPLETE LIST OF AVAILABLE MATERIALS, FINISHES AND CONNECTOR INTERFACES
(DIMENSIONS, FORM AND O RING SUBJECT TO CHANGE DEPENDING ON BACKSHELL MATERIAL AND CONNECTOR INTERFACE)

THIS DRAWING IS THE PROPERTY OF POLAMCO LTD AND MUST NOT BE USED FOR
COMMERCIAL PURPOSES WITHOUT WRITTEN CONSENT OF THE COMPANY

# 64 (SS) - Cone Clamp Termination Stainless Steel

## Interface H - MIL-DTL-38999 SERIES III & IV

Polamco

**Interconnect Solutions Worldwide**

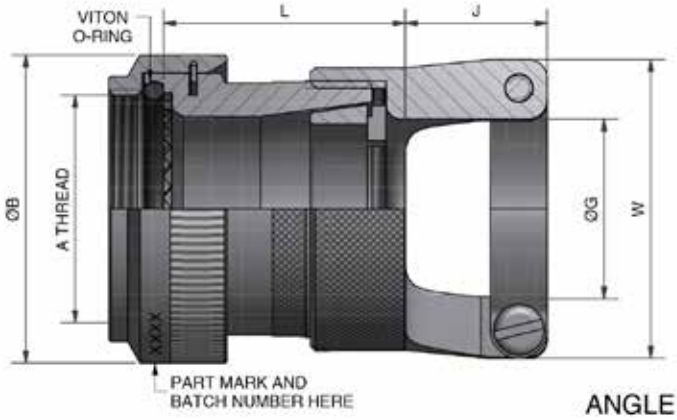


ANGLE 1

PLAIN NUT OPTION

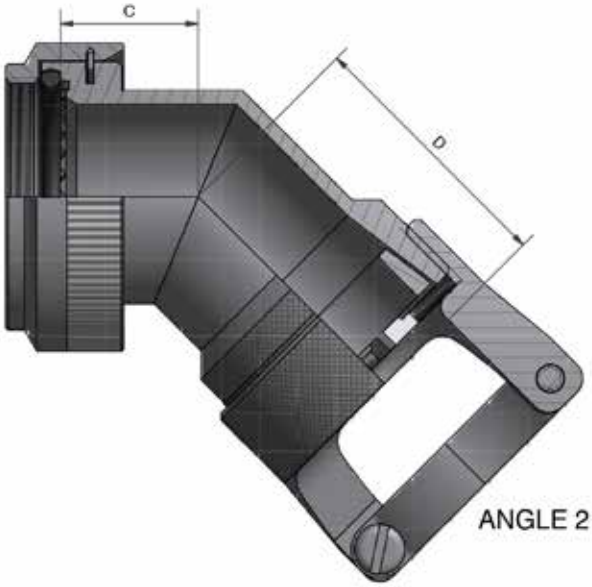


ANGLE 2

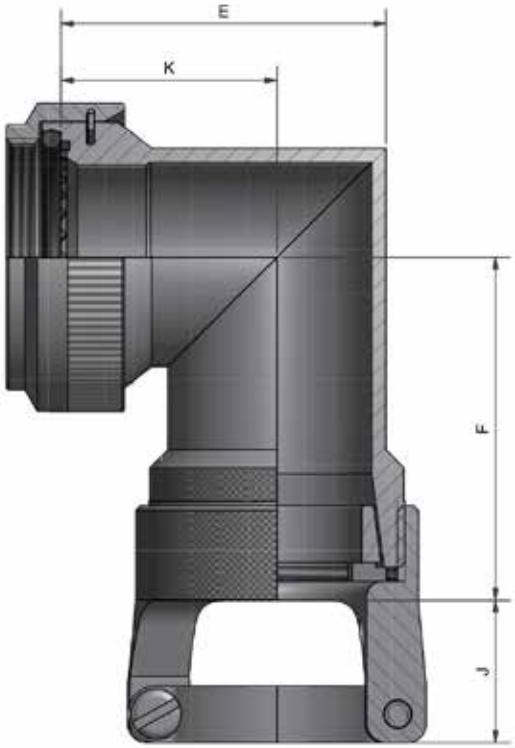


ANGLE 3

DRAWING NOT TO SCALE, DIMENSIONS IN MM

SEE PAGES 18-26 FOR COMPLETE LIST OF AVAILABLE MATERIALS, FINISHES AND CONNECTOR INTERFACES
(DIMENSIONS, FORM AND O RING SUBJECT TO CHANGE DEPENDING ON BACKSHELL MATERIAL AND CONNECTOR INTERFACE)





THIS DRAWING IS THE PROPERTY OF POLAMCO LTD AND MUST NOT BE USED FOR COMMERCIAL PURPOSES WITHOUT WRITTEN CONSENT OF THE COMPANY

# 64 (SS) - Cone Clamp Termination Stainless Steel

## Interface H - MIL-DTL-38999 SERIES III & IV

Polamco

**Interconnect Solutions Worldwide**

TABLE 1

| SHELL SIZE | A THREAD | ØB MAX | C MAX | D MAX | E MAX | F MAX | K ±0,5 | ØG MIN | W MAX | ØH MAX | J ±0,5 | L STANDARD |
|---|---|---|---|---|---|---|---|---|---|---|---|---|
| 09 | M12 x 1.0 | 18,0 | 13,1 | 24,6 | 21,4 | 30,1 | 16,3 | 6,6 | 20,7 | 16,0 | 15,0 | 25,5 |
| 11 | M15 x 1.0 | 21,0 | 13,9 | 25,4 | 24,5 | 31,9 | 17,2 | 9,3 | 23,8 | 19,0 | 15,0 | 25,5 |
| 13 | M18 x 1.0 | 24,5 | 14,5 | 26,3 | 28,5 | 33,4 | 19,4 | 12,6 | 27,0 | 22,0 | 15,0 | 25,5 |
| 15 | M22 x 1.0 | 29,0 | 15,5 | 26,7 | 31,3 | 34,9 | 21,0 | 14,6 | 28,6 | 26,5 | 15,0 | 25,5 |
| 17 | M25 x 1.0 | 32,5 | 16,1 | 27,5 | 34,4 | 36,6 | 22,8 | 17,7 | 31,8 | 29,8 | 15,0 | 25,5 |
| 19 | M28 x 1.0 | 35,5 | 16,8 | 27,8 | 38,7 | 38,2 | 25,3 | 19,8 | 35,0 | 33,0 | 18,0 | 25,5 |
| 21 | M31 x 1.0 | 37,0 | 17,1 | 28,6 | 40,9 | 39,8 | 26,1 | 23,0 | 38,1 | 35,0 | 18,0 | 25,5 |
| 23 | M34 x 1.0 | 40,0 | 17,7 | 29,5 | 43,9 | 41,3 | 27,6 | 26,2 | 39,7 | 38,0 | 18,0 | 25,5 |
| 25 | M37 x 1.0 | 43,5 | 18,4 | 29,9 | 46,6 | 42,8 | 29,1 | 29,1 | 44,5 | 41,0 | 18,0 | 25,5 |

TABLE 2

| CODE | MATERIAL / FINISH |
|---|---|
| 4-J | STAINLESS STEEL 303S31 / PASSIVATE |
| 46-J | STAINLESS STEEL 316 / PASSIVATE |

LIST NOT EXHAUSTIVE, SEE PLATING TABLE FOR OTHER OPTIONS

64H1-17-4-J-CC-L35

- SERIES
- CONNECTOR INTERFACE
- ANGLE
- SHELL SIZE (TABLE 1)
- MATERIAL (TABLE 2)
- FINISH (TABLE 2)
- CABLE CLAMP
  OMIT FOR PLAIN NUT OPTION
- LENGTH CODE IN mm (STRAIGHT ONLY)
  OMIT FOR STANDARD (TABLE 1)

CONE TERMINATION

**For tooling and assembly instructions see www.polamco.com**

Backshell supplied with Cone(s)
Sealing and strain relief achieved with Heat Shrink Boot for non CC versions (see page 354)
Adhesive if required for assembly (see page 352)
Screenbraid for EMC/RFI screening (see page 350)

DRAWING NOT TO SCALE, DIMENSIONS IN MM

SEE PAGES 18-26 FOR COMPLETE LIST OF AVAILABLE MATERIALS, FINISHES AND CONNECTOR INTERFACES
(DIMENSIONS, FORM AND O RING SUBJECT TO CHANGE DEPENDING ON BACKSHELL MATERIAL AND CONNECTOR INTERFACE)

THIS DRAWING IS THE PROPERTY OF POLAMCO LTD AND MUST NOT BE USED FOR COMMERCIAL PURPOSES WITHOUT WRITTEN CONSENT OF THE COMPANY

# 64 (NB) - Cone Clamp Termination
# Nickel Aluminium Bronze

## Interface H - MIL-DTL-38999 SERIES III & IV

Polamco

**Interconnect Solutions Worldwide**

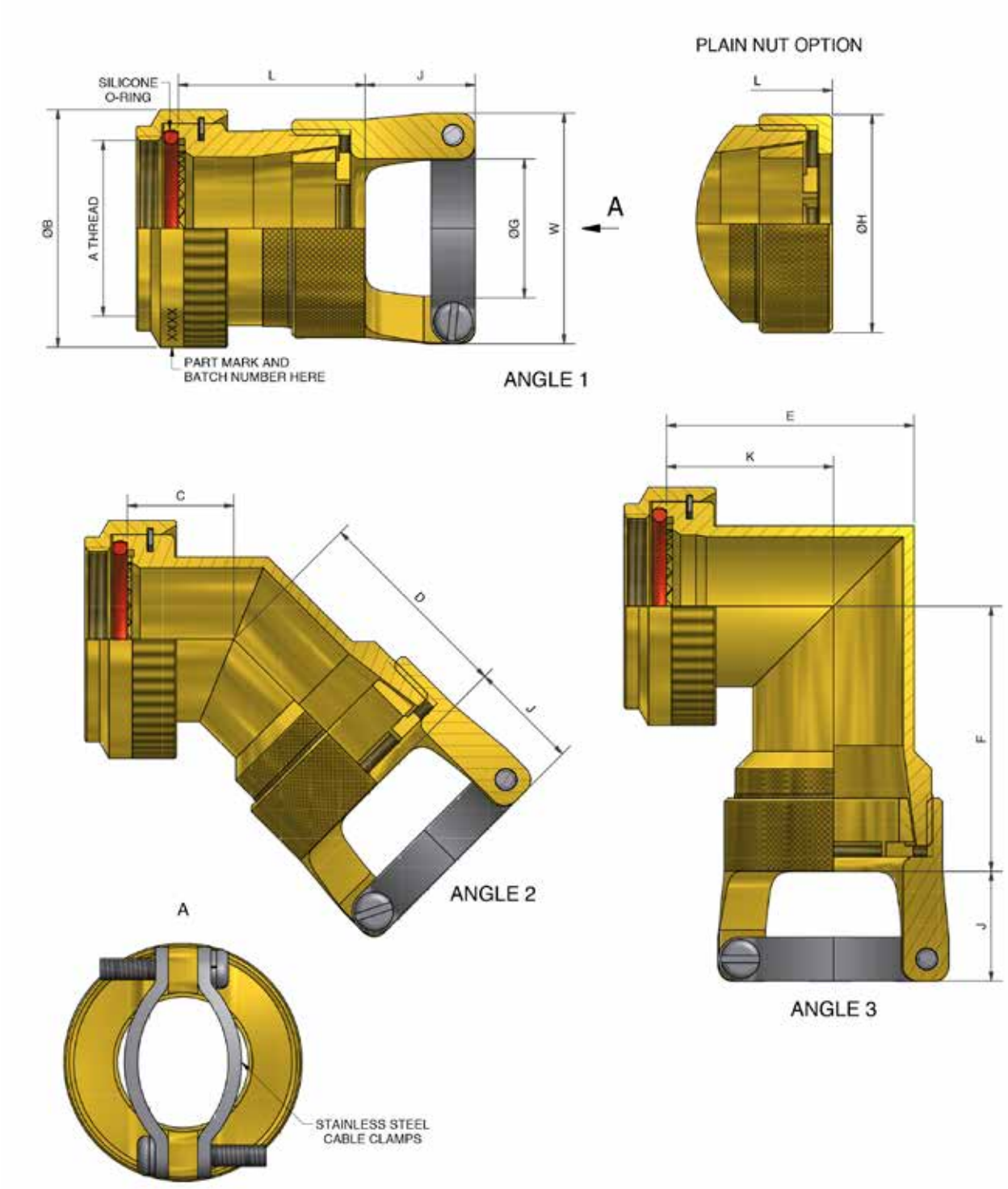


DRAWING NOT TO SCALE, DIMENSIONS IN MM

SEE PAGES 18-26 FOR COMPLETE LIST OF AVAILABLE MATERIALS, FINISHES AND CONNECTOR INTERFACES
(DIMENSIONS, FORM AND O RING SUBJECT TO CHANGE DEPENDING ON BACKSHELL MATERIAL AND CONNECTOR INTERFACE)





THIS DRAWING IS THE PROPERTY OF POLAMCO LTD AND MUST NOT BE USED FOR COMMERCIAL PURPOSES WITHOUT WRITTEN CONSENT OF THE COMPANY

# 64 (NB) - Cone Clamp Termination
# Nickel Aluminium Bronze
## Interface H - MIL-DTL-38999 SERIES III & IV

Polamco

**Interconnect Solutions Worldwide**

TABLE 1

| SHELL SIZE | A THREAD | ØB MAX | C MAX | D MAX | E MAX | F MAX | K ±0,5 | ØG MIN | W MAX | ØH MAX | J ±0,5 | L STANDARD |
|---|---|---|---|---|---|---|---|---|---|---|---|---|
| 09 | M12 x 1.0 | 18,0 | 13,1 | 24,6 | 21,4 | 30,1 | 16,3 | 6,6 | 20,7 | 16,0 | 15,0 | 25,5 |
| 11 | M15 x 1.0 | 21,0 | 13,9 | 25,4 | 24,5 | 31,9 | 17,2 | 9,3 | 23,8 | 19,0 | 15,0 | 25,5 |
| 13 | M18 x 1.0 | 24,5 | 14,5 | 26,3 | 28,5 | 33,4 | 19,4 | 12,6 | 27,0 | 22,0 | 15,0 | 25,5 |
| 15 | M22 x 1.0 | 29,0 | 15,5 | 26,7 | 31,3 | 34,9 | 21,0 | 14,6 | 28,6 | 26,5 | 15,0 | 25,5 |
| 17 | M25 x 1.0 | 32,5 | 16,1 | 27,5 | 34,4 | 36,6 | 22,8 | 17,7 | 31,8 | 29,8 | 15,0 | 25,5 |
| 19 | M28 x 1.0 | 35,5 | 16,8 | 27,8 | 38,7 | 38,2 | 25,3 | 19,8 | 35,0 | 33,0 | 18,0 | 25,5 |
| 21 | M31 x 1.0 | 37,0 | 17,1 | 28,6 | 40,9 | 39,8 | 26,1 | 23,0 | 38,1 | 35,0 | 18,0 | 25,5 |
| 23 | M34 x 1.0 | 40,0 | 17,7 | 29,5 | 43,9 | 41,3 | 27,6 | 26,2 | 39,7 | 38,0 | 18,0 | 25,5 |
| 25 | M37 x 1.0 | 43,5 | 18,4 | 29,9 | 46,6 | 42,8 | 29,1 | 29,1 | 44,5 | 41,0 | 18,0 | 25,5 |

64H1-17-2-Z-CC-L35

SERIES
CONNECTOR INTERFACE
ANGLE
SHELL SIZE (TABLE 1)
MATERIAL
NICKEL ALUMINIUM BRONZE
FINISH
SHOT BLAST
CABLE CLAMP
OMIT FOR PLAIN NUT OPTION
LENGTH CODE IN mm (STRAIGHT ONLY)
OMIT FOR STANDARD (TABLE 1)

CONE TERMINATION

**For tooling and assembly instructions see www.polamco.com**

Backshell supplied with Cone(s)
Sealing and strain relief achieved with Heat Shrink Boot for non CC versions (see page 354)
Adhesive if required for assembly (see page 352)
Screenbraid for EMC/RFI screening (see page 350)

DRAWING NOT TO SCALE, DIMENSIONS IN MM

SEE PAGES 18-26 FOR COMPLETE LIST OF AVAILABLE MATERIALS, FINISHES AND CONNECTOR INTERFACES
(DIMENSIONS, FORM AND O RING SUBJECT TO CHANGE DEPENDING ON BACKSHELL MATERIAL AND CONNECTOR INTERFACE)

THIS DRAWING IS THE PROPERTY OF POLAMCO LTD AND MUST NOT BE USED FOR
COMMERCIAL PURPOSES WITHOUT WRITTEN CONSENT OF THE COMPANY

# 64F - Cone Clamp Termination
# Step-Up / Step-Down version

## Interface F - MIL-DTL-38999 SERIES I

Polamco

**Interconnect Solutions Worldwide**

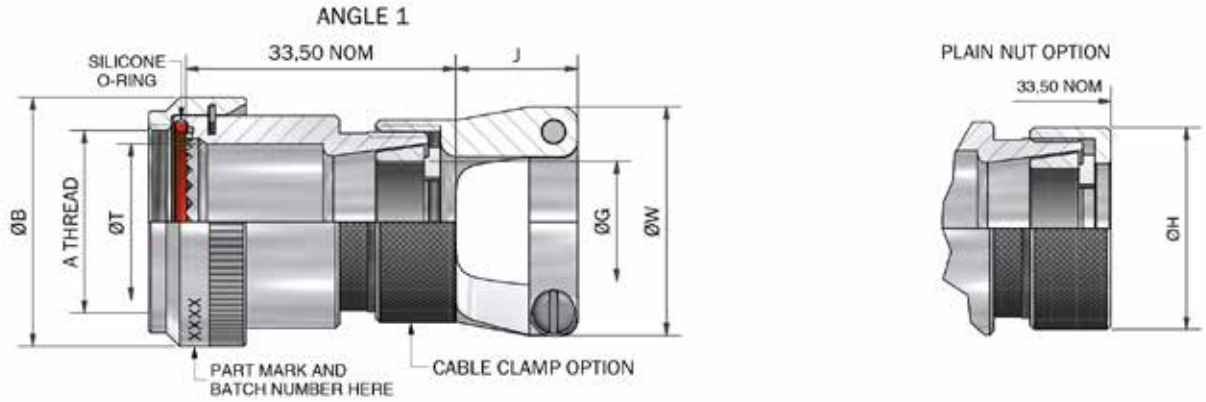


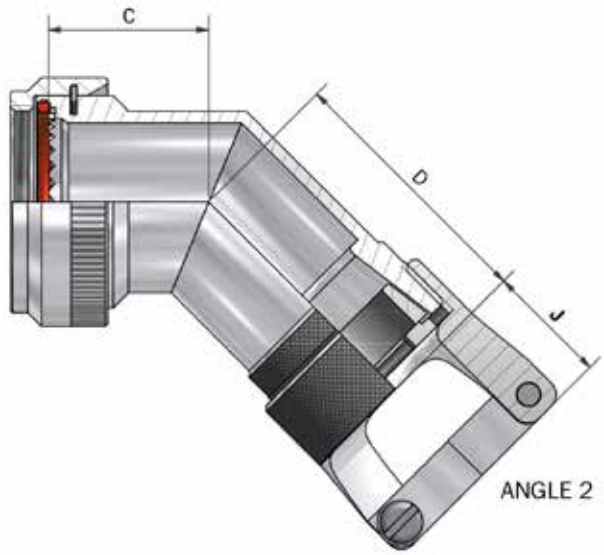


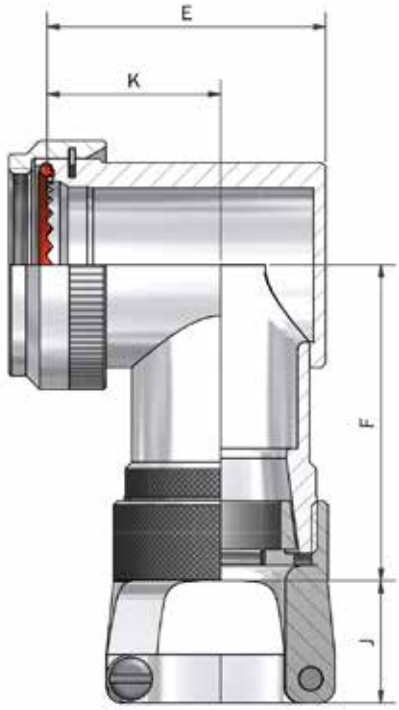

DRAWING NOT TO SCALE, DIMENSIONS IN MM

SEE PAGES 18-26 FOR COMPLETE LIST OF AVAILABLE MATERIALS, FINISHES AND CONNECTOR INTERFACES
(DIMENSIONS, FORM AND O RING SUBJECT TO CHANGE DEPENDING ON BACKSHELL MATERIAL AND CONNECTOR INTERFACE)





THIS DRAWING IS THE PROPERTY OF POLAMCO LTD AND MUST NOT BE USED FOR COMMERCIAL PURPOSES WITHOUT WRITTEN CONSENT OF THE COMPANY

# 64F - Cone Clamp Termination
# Step-Up / Step-Down version
## Interface F - MIL-DTL-38999 SERIES I

Polamco

**Interconnect Solutions Worldwide**

TABLE 1

| SHELL SIZE | A THREAD | ØB MAX | ØT MIN | C ±0,5 | D MAX | E MAX | F MAX | K ±0,5 |
|---|---|---|---|---|---|---|---|---|
| 09 | 7/16-28 UNEF | 18,0 | 6,8 | 16,4 | 33,6 | 22,7 | 35,1 | 15,0 |
| 11 | 9/16-24 UNEF | 21,0 | 10,2 | 17,2 | 34,4 | 26,2 | 36,9 | 17,0 |
| 13 | 11/16-24 UNEF | 24,5 | 13,1 | 17,6 | 35,3 | 29,2 | 38,4 | 18,0 |
| 15 | 13/16-20 UNEF | 27,8 | 16,2 | 18,5 | 35,7 | 32,2 | 39,9 | 20,0 |
| 17 | 15/16-20 UNEF | 30,8 | 19,3 | 19,2 | 36,5 | 35,7 | 41,6 | 21,5 |
| 19 | 1 1/16-18 UNEF | 34,1 | 22,3 | 19,6 | 36,8 | 39,7 | 43,2 | 23,0 |
| 21 | 1 3/16-18 UNEF | 37,3 | 25,8 | 20,4 | 37,6 | 42,2 | 44,8 | 25,0 |
| 23 | 1 5/16-18 UNEF | 41,0 | 28,3 | 20,8 | 38,5 | 45,2 | 46,3 | 26,0 |
| 25 | 1 7/16-18 UNEF | 43,7 | 31,5 | 21,7 | 38,9 | 48,2 | 47,8 | 28,0 |

TABLE 2

| ENTRY SIZE | ØG MIN | ØW MAX | ØH MAX | J MAX | M ±0,5 |
|---|---|---|---|---|---|
| 09 | 6,6 | 20,7 | 16,0 | 15,2 | 7,8 |
| 11 | 9,3 | 23,8 | 19,0 | 15,2 | 8,6 |
| 13 | 12,6 | 27,0 | 22,0 | 15,2 | 10,2 |
| 15 | 14,6 | 28,6 | 26,5 | 15,2 | 10,4 |
| 17 | 17,7 | 31,8 | 29,8 | 15,2 | 12,4 |
| 19 | 19,8 | 35,0 | 33,0 | 18,2 | 15,4 |
| 21 | 23,0 | 38,1 | 35,0 | 18,2 | 17,3 |
| 23 | 26,2 | 39,7 | 38,0 | 18,2 | 18,8 |
| 25 | 29,1 | 44,5 | 41,0 | 18,2 | 22,4 |

TABLE 3

| CODE | FINISH |
|---|---|
| C | ELECTROLESS NICKEL |
| B | CADMIUM OLIVE DRAB OVER ELECTROLESS NICKEL |
| ZB | ZINC COBALT OLIVE DRAB OVER ELECTROLESS NICKEL |
| ZN | ZINC NICKEL BLACK PASSIVATE OVER ELECTROLESS NICKEL |

LIST NOT EXHAUSTIVE, SEE PLATING TABLE FOR OTHER OPTIONS

64F1-17-15-1-C-CC

- SERIES
- CONNECTOR INTERFACE
- ANGLE
- SHELL SIZE (TABLE 1)
- ENTRY SIZE (TABLE 2)
- MATERIAL
  - ALUMINIUM ALLOY
- FINISH (TABLE 3)
- CABLE CLAMP OPTION
  - OMIT FOR PLAIN NUT

**For tooling and assembly instructions see www.polamco.com**

Backshell supplied with Cone(s)
Sealing and strain relief achieved with Heat Shrink Boot for non CC versions (see page 354)
Adhesive if required for assembly (see page 352)
Screenbraid for EMC/RFI screening (see page 350)

DRAWING NOT TO SCALE, DIMENSIONS IN MM

SEE PAGES 18-26 FOR COMPLETE LIST OF AVAILABLE MATERIALS, FINISHES AND CONNECTOR INTERFACES
(DIMENSIONS, FORM AND O RING SUBJECT TO CHANGE DEPENDING ON BACKSHELL MATERIAL AND CONNECTOR INTERFACE)

THIS DRAWING IS THE PROPERTY OF POLAMCO LTD AND MUST NOT BE USED FOR COMMERCIAL PURPOSES WITHOUT WRITTEN CONSENT OF THE COMPANY

# 64F - Cone Clamp Termination
# Step-Up / Step-Down version

## Interface F - MIL-DTL-38999 SERIES II

Polamco

**Interconnect Solutions Worldwide**

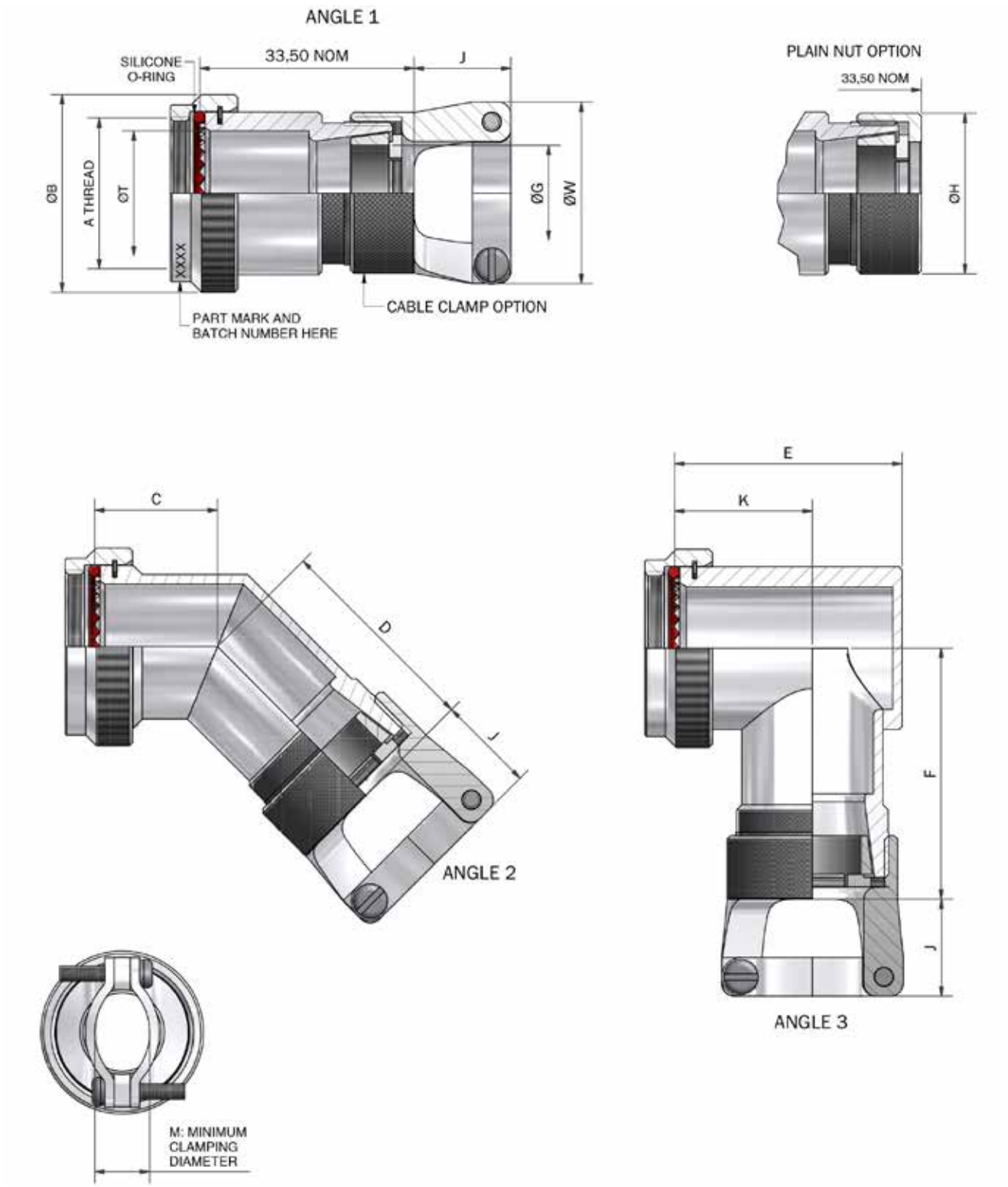


DRAWING NOT TO SCALE, DIMENSIONS IN MM

SEE PAGES 18-26 FOR COMPLETE LIST OF AVAILABLE MATERIALS, FINISHES AND CONNECTOR INTERFACES
(DIMENSIONS, FORM AND O RING SUBJECT TO CHANGE DEPENDING ON BACKSHELL MATERIAL AND CONNECTOR INTERFACE)





THIS DRAWING IS THE PROPERTY OF POLAMCO LTD AND MUST NOT BE USED FOR COMMERCIAL PURPOSES WITHOUT WRITTEN CONSENT OF THE COMPANY

# 64F - Cone Clamp Termination
# Step-Up / Step-Down version
## Interface F - MIL-DTL-38999 SERIES II

Polamco

**Interconnect Solutions Worldwide**

TABLE 1

| SHELL SIZE | A THREAD | ØB MAX | ØT MIN | C ±0,5 | D MAX | E MAX | F NOM | K ±0,5 |
|---|---|---|---|---|---|---|---|---|
| 08 | 7/16-28 UNEF | 18,3 | 6,6 | 16,4 | 33,6 | 22,7 | 35,1 | 15,0 |
| 10 | 9/16-24 UNEF | 21,5 | 10,1 | 17,2 | 34,4 | 26,2 | 36,9 | 17,0 |
| 12 | 11/16-24 UNEF | 24,5 | 12,9 | 17,6 | 35,3 | 29,2 | 38,4 | 18,0 |
| 14 | 13/16-20 UNEF | 27,8 | 16,1 | 18,5 | 35,7 | 32,2 | 39,9 | 20,0 |
| 16 | 15/16-20 UNEF | 30,8 | 19,3 | 19,2 | 36,5 | 35,7 | 41,6 | 21,5 |
| 18 | 1 1/16-18 UNEF | 34,1 | 21,7 | 19,6 | 36,8 | 39,7 | 43,2 | 23,0 |
| 20 | 1 3/16-18 UNEF | 37,3 | 24,9 | 20,4 | 37,6 | 42,2 | 44,8 | 25,0 |
| 22 | 1 5/16-18 UNEF | 40,5 | 28,1 | 20,8 | 38,5 | 45,2 | 46,3 | 26,0 |
| 24 | 1 7/16-18 UNEF | 43,7 | 31,3 | 21,7 | 38,9 | 48,2 | 47,8 | 28,0 |

TABLE 2

| ENTRY SIZE | ØG MIN | ØW MAX | ØH MAX | J MAX | M ±0,5 |
|---|---|---|---|---|---|
| 08 | 6,6 | 20,7 | 16,0 | 15,2 | 7,8 |
| 10 | 9,3 | 23,8 | 19,0 | 15,2 | 8,6 |
| 12 | 12,6 | 27,0 | 22,0 | 15,2 | 10,2 |
| 14 | 14,6 | 28,6 | 26,5 | 15,2 | 10,4 |
| 16 | 17,7 | 31,8 | 29,8 | 15,2 | 12,4 |
| 18 | 19,8 | 35,0 | 33,0 | 18,2 | 15,4 |
| 20 | 23,0 | 38,1 | 35,0 | 18,2 | 17,3 |
| 22 | 26,2 | 39,7 | 38,0 | 18,2 | 18,8 |
| 24 | 29,1 | 44,5 | 41,0 | 18,2 | 22,4 |

TABLE 3

| CODE | FINISH |
|---|---|
| C | ELECTROLESS NICKEL |
| B | CADMIUM OLIVE DRAB OVER ELECTROLESS NICKEL |
| ZB | ZINC COBALT OLIVE DRAB OVER ELECTROLESS NICKEL |
| ZN | ZINC NICKEL BLACK PASSIVATE OVER ELECTROLESS NICKEL |

LIST NOT EXHAUSTIVE, SEE PLATING TABLE FOR OTHER OPTIONS

64F1-16-14-1-C-CC

- SERIES
- CONNECTOR INTERFACE
- ANGLE
- SHELL SIZE (TABLE 1)
- ENTRY SIZE (TABLE 2)
- MATERIAL
  - ALUMINIUM ALLOY
- FINISH (TABLE 3)
- CABLE CLAMP OPTION
  - OMIT FOR PLAIN NUT

**For tooling and assembly instructions see www.polamco.com**

Backshell supplied with Cone(s)
Sealing and strain relief achieved with Heat Shrink Boot for non CC versions (see page 354)
Adhesive if required for assembly (see page 352)
Screenbraid for EMC/RFI screening (see page 350)

DRAWING NOT TO SCALE, DIMENSIONS IN MM

SEE PAGES 18-26 FOR COMPLETE LIST OF AVAILABLE MATERIALS, FINISHES AND CONNECTOR INTERFACES
(DIMENSIONS, FORM AND O RING SUBJECT TO CHANGE DEPENDING ON BACKSHELL MATERIAL AND CONNECTOR INTERFACE)

THIS DRAWING IS THE PROPERTY OF POLAMCO LTD AND MUST NOT BE USED FOR COMMERCIAL PURPOSES WITHOUT WRITTEN CONSENT OF THE COMPANY

# 64H - Cone Clamp Termination
# Step-Up / Step-Down version
## Interface H - MIL-DTL-38999 SERIES III & IV

Polamco

**Interconnect Solutions Worldwide**

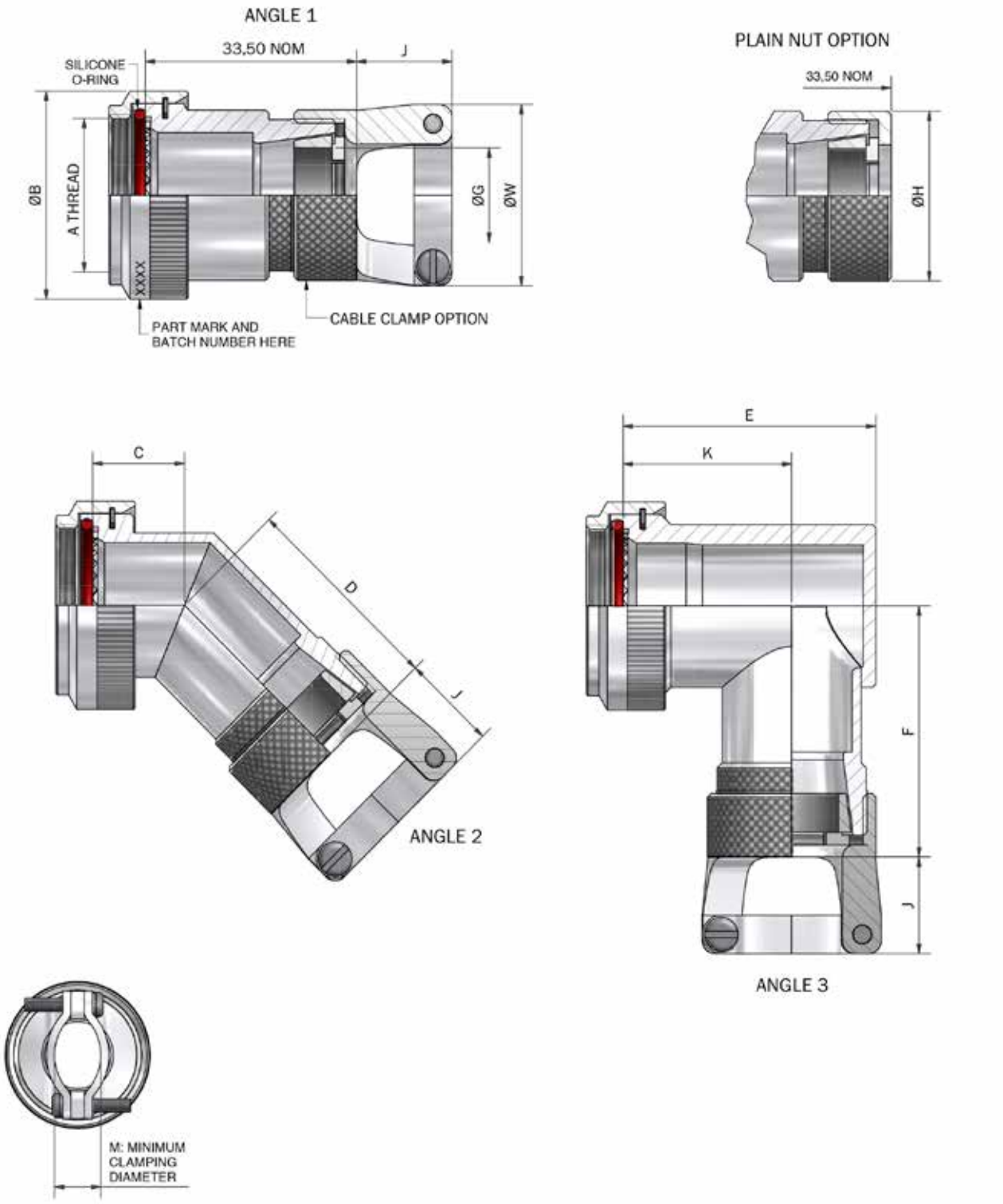


DRAWING NOT TO SCALE, DIMENSIONS IN MM

SEE PAGES 18-26 FOR COMPLETE LIST OF AVAILABLE MATERIALS, FINISHES AND CONNECTOR INTERFACES
(DIMENSIONS, FORM AND O RING SUBJECT TO CHANGE DEPENDING ON BACKSHELL MATERIAL AND CONNECTOR INTERFACE)





THIS DRAWING IS THE PROPERTY OF POLAMCO LTD AND MUST NOT BE USED FOR COMMERCIAL PURPOSES WITHOUT WRITTEN CONSENT OF THE COMPANY

# 64H - Cone Clamp Termination
# Step-Up / Step-Down version
## Interface H - MIL-DTL-38999 SERIES III & IV

Polamco

**Interconnect Solutions Worldwide**

TABLE 1

| SHELL SIZE | A THREAD | ØB MAX | C ±0,5 | D MAX | E MAX | F MAX | K ±0,5 |
|---|---|---|---|---|---|---|---|
| 09 | M12 x 1.0 | 18,0 | 13,1 | 29,6 | 25,7 | 35,1 | 17,5 |
| 11 | M15 x 1.0 | 21,0 | 13,9 | 30,4 | 26,7 | 36,9 | 17,5 |
| 13 | M18 x 1.0 | 24,5 | 14,5 | 31,3 | 31,2 | 38,4 | 20,0 |
| 15 | M22 x 1.0 | 29,0 | 15,5 | 31,7 | 37,2 | 39,9 | 24,5 |
| 17 | M25 x 1.0 | 32,5 | 16,1 | 32,5 | 40,2 | 41,6 | 26,7 |
| 19 | M28 x 1.0 | 35,5 | 16,8 | 32,8 | 44,7 | 43,2 | 27,0 |
| 21 | M31 x 1.0 | 37,0 | 17,1 | 33,6 | 49,2 | 44,8 | 30,5 |
| 23 | M34 x 1.0 | 40,0 | 17,7 | 34,5 | 51,7 | 46,3 | 31,5 |
| 25 | M37 x 1.0 | 43,5 | 18,4 | 34,9 | 53,2 | 47,8 | 28,5 |

TABLE 2

| ENTRY SIZE | ØG MIN | ØW MAX | ØH MAX | J MAX | M ±0,5 |
|---|---|---|---|---|---|
| 09 | 6,6 | 20,7 | 16,0 | 15,2 | 7,8 |
| 11 | 9,3 | 23,8 | 19,0 | 15,2 | 8,6 |
| 13 | 12,6 | 27,0 | 22,0 | 15,2 | 10,2 |
| 15 | 14,6 | 28,6 | 26,5 | 15,2 | 10,4 |
| 17 | 17,7 | 31,8 | 29,8 | 15,2 | 12,4 |
| 19 | 19,8 | 35,0 | 33,0 | 18,2 | 15,4 |
| 21 | 23,0 | 38,1 | 35,0 | 18,2 | 17,3 |
| 23 | 26,2 | 39,7 | 38,0 | 18,2 | 18,8 |
| 25 | 29,1 | 44,5 | 41,0 | 18,2 | 22,4 |

TABLE 3

| CODE | FINISH |
|---|---|
| C | ELECTROLESS NICKEL |
| B | CADMIUM OLIVE DRAB OVER ELECTROLESS NICKEL |
| ZB | ZINC COBALT OLIVE DRAB OVER ELECTROLESS NICKEL |
| ZN | ZINC NICKEL BLACK PASSIVATE OVER ELECTROLESS NICKEL |

LIST NOT EXHAUSTIVE, SEE PLATING TABLE FOR OTHER OPTIONS

64H1-17-15-1-C-CC

- SERIES
- CONNECTOR INTERFACE
- ANGLE
- SHELL SIZE (TABLE 1)
- ENTRY SIZE (TABLE 2)
- MATERIAL
  - ALUMINIUM ALLOY
- FINISH (TABLE 3)
- CABLE CLAMP OPTION
  - OMIT FOR PLAIN NUT

**For tooling and assembly instructions see www.polamco.com**

Backshell supplied with Cone(s)
Sealing and strain relief achieved with Heat Shrink Boot for non CC versions (see page 354)
Adhesive if required for assembly (see page 352)
Screenbraid for EMC/RFI screening (see page 350)

DRAWING NOT TO SCALE, DIMENSIONS IN MM

SEE PAGES 18-26 FOR COMPLETE LIST OF AVAILABLE MATERIALS, FINISHES AND CONNECTOR INTERFACES
(DIMENSIONS, FORM AND O RING SUBJECT TO CHANGE DEPENDING ON BACKSHELL MATERIAL AND CONNECTOR INTERFACE)



THIS DRAWING IS THE PROPERTY OF POLAMCO LTD AND MUST NOT BE USED FOR
COMMERCIAL PURPOSES WITHOUT WRITTEN CONSENT OF THE COMPANY

# 64 (SS) - Cone Clamp Termination
# Step-Up / Step-Down version
## Interface H - MIL-DTL-38999 SERIES III & IV

Polamco

**Interconnect Solutions Worldwide**

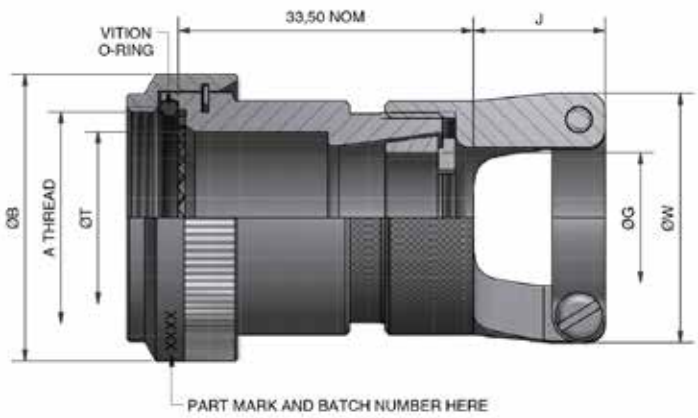


ANGLE 1

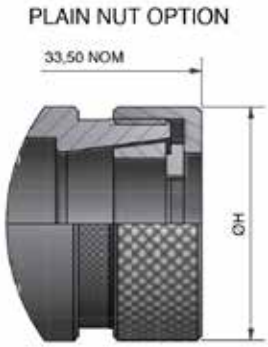


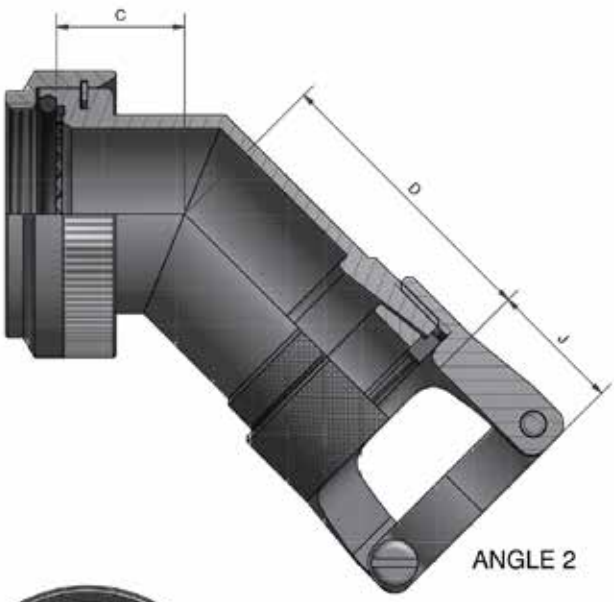


ANGLE 2

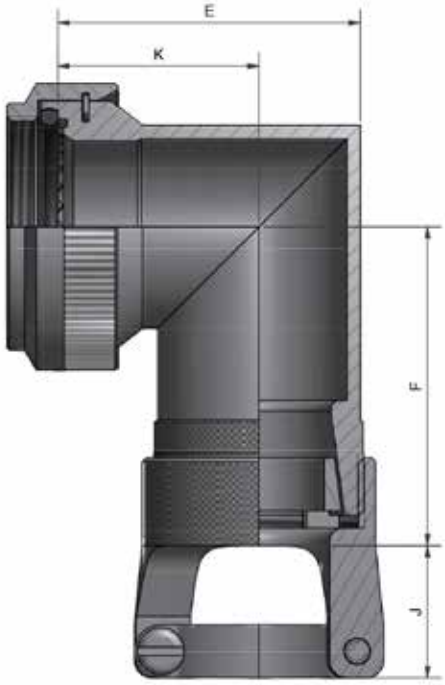


ANGLE 3

DRAWING NOT TO SCALE, DIMENSIONS IN MM

SEE PAGES 18-26 FOR COMPLETE LIST OF AVAILABLE MATERIALS, FINISHES AND CONNECTOR INTERFACES
(DIMENSIONS, FORM AND O RING SUBJECT TO CHANGE DEPENDING ON BACKSHELL MATERIAL AND CONNECTOR INTERFACE)





THIS DRAWING IS THE PROPERTY OF POLAMCO LTD AND MUST NOT BE USED FOR COMMERCIAL PURPOSES WITHOUT WRITTEN CONSENT OF THE COMPANY

# 64 (SS) - Cone Clamp Termination
# Step-Up / Step-Down version
## Interface H - MIL-DTL-38999 SERIES III & IV

Polamco

**Interconnect Solutions Worldwide**

TABLE 1

| SHELL SIZE | A THREAD | ØB MAX | ØT MIN | C ±0,5 | D MAX | E MAX | F MAX | K ±0,5 |
|---|---|---|---|---|---|---|---|---|
| 09 | M12 x 1.0 | 18,0 | 6,7 | 12,0 | 29,6 | 21,4 | 35,1 | 16,3 |
| 11 | M15 x 1.0 | 21,0 | 9,9 | 12,5 | 30,4 | 24,5 | 36,9 | 17,2 |
| 13 | M18 x 1.0 | 24,5 | 12,8 | 13,1 | 31,3 | 28,5 | 38,4 | 19,4 |
| 15 | M22 x 1.0 | 29,0 | 16,0 | 13,5 | 31,7 | 31,3 | 39,9 | 21,0 |
| 17 | M25 x 1.0 | 32,5 | 19,2 | 14,5 | 32,5 | 34,4 | 41,6 | 22,8 |
| 19 | M28 x 1.0 | 35,5 | 21,4 | 15,5 | 32,8 | 38,7 | 43,2 | 25,3 |
| 21 | M31 x 1.0 | 37,0 | 24,6 | 16,0 | 33,6 | 40,9 | 44,8 | 26,1 |
| 23 | M34 x 1.0 | 40,0 | 27,7 | 16,5 | 34,5 | 43,9 | 46,3 | 27,6 |
| 25 | M37 x 1.0 | 43,5 | 30,9 | 17,1 | 34,9 | 46,6 | 47,8 | 29,1 |

TABLE 2

| ENTRY SIZE | ØG MIN | W MAX | ØH MAX | J ±0,5 | M ±0,5 |
|---|---|---|---|---|---|
| 09 | 6,6 | 20,7 | 16,0 | 15,0 | 7,8 |
| 11 | 9,3 | 23,8 | 19,0 | 15,0 | 8,6 |
| 13 | 12,6 | 27,0 | 22,0 | 15,0 | 10,2 |
| 15 | 14,6 | 28,6 | 26,5 | 15,0 | 10,4 |
| 17 | 17,7 | 31,8 | 29,8 | 15,0 | 12,4 |
| 19 | 19,8 | 35,0 | 33,0 | 18,0 | 15,4 |
| 21 | 23,0 | 38,1 | 35,0 | 18,0 | 17,3 |
| 23 | 26,2 | 39,7 | 38,0 | 18,0 | 18,8 |
| 25 | 29,1 | 44,5 | 41,0 | 18,0 | 22,4 |

TABLE 3

| CODE | MATERIAL / FINISH |
|---|---|
| 4-J | STAINLESS STEEL 303S31 / PASSIVATE |
| 46-J | STAINLESS STEEL 316 / PASSIVATE |

LIST NOT EXHAUSTIVE, SEE PLATING TABLE FOR OTHER OPTIONS

64H1-17-15-4-J-CC

- SERIES
- CONNECTOR INTERFACE
- ANGLE
- SHELL SIZE (TABLE 1)
- ENTRY SIZE (TABLE 2)
- MATERIAL (TABLE 3)
- FINISH (TABLE 3)
- CABLE CLAMP OPTION
  OMIT FOR PLAIN NUT

**For tooling and assembly instructions see www.polamco.com**

Backshell supplied with Cone(s)
Sealing and strain relief achieved with Heat Shrink Boot for non CC versions (see page 354)
Adhesive if required for assembly (see page 352)
Screenbraid for EMC/RFI screening (see page 350)

DRAWING NOT TO SCALE, DIMENSIONS IN MM

SEE PAGES 18-26 FOR COMPLETE LIST OF AVAILABLE MATERIALS, FINISHES AND CONNECTOR INTERFACES
(DIMENSIONS, FORM AND O RING SUBJECT TO CHANGE DEPENDING ON BACKSHELL MATERIAL AND CONNECTOR INTERFACE)

THIS DRAWING IS THE PROPERTY OF POLAMCO LTD AND MUST NOT BE USED FOR
COMMERCIAL PURPOSES WITHOUT WRITTEN CONSENT OF THE COMPANY

# 64 (NB) - Cone Clamp Termination
# Step-Up / Step-Down version
## Interface H - MIL-DTL-38999 SERIES III & IV

Polamco

**Interconnect Solutions Worldwide**

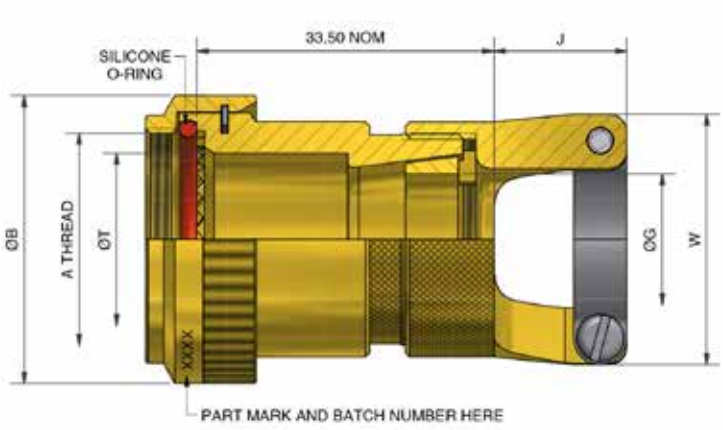


ANGLE 1

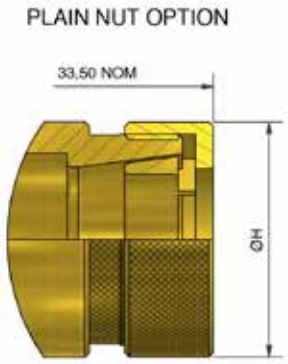


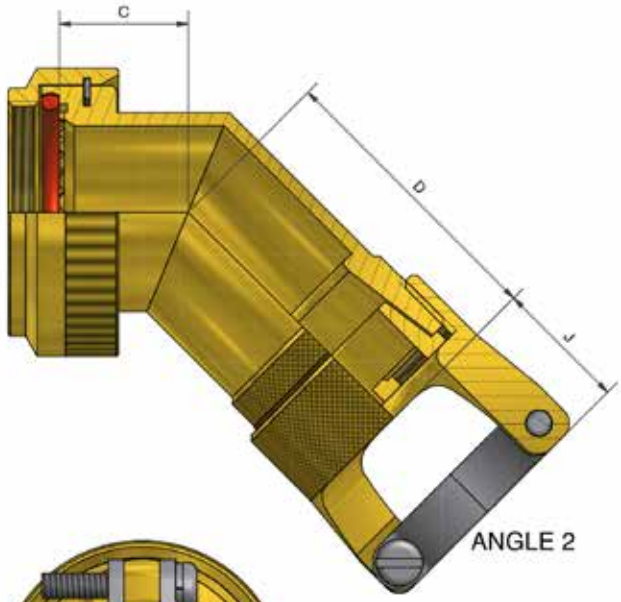


ANGLE 2

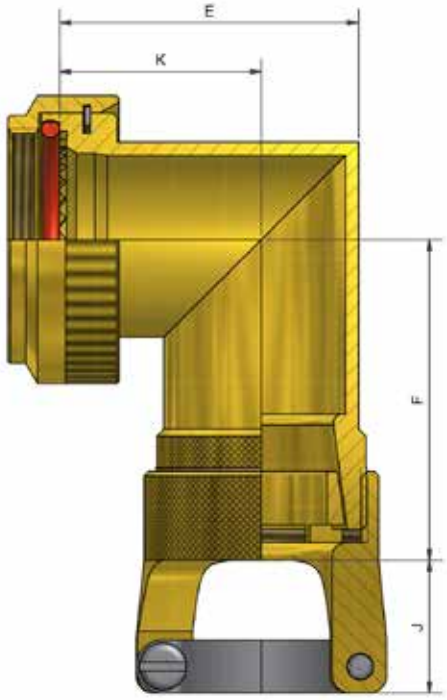


ANGLE 3

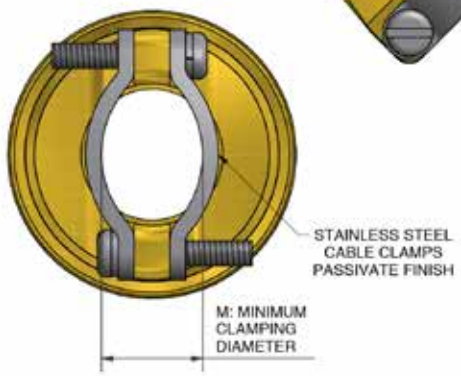


DRAWING NOT TO SCALE, DIMENSIONS IN MM

SEE PAGES 18-26 FOR COMPLETE LIST OF AVAILABLE MATERIALS, FINISHES AND CONNECTOR INTERFACES
(DIMENSIONS, FORM AND O RING SUBJECT TO CHANGE DEPENDING ON BACKSHELL MATERIAL AND CONNECTOR INTERFACE)





THIS DRAWING IS THE PROPERTY OF POLAMCO LTD AND MUST NOT BE USED FOR COMMERCIAL PURPOSES WITHOUT WRITTEN CONSENT OF THE COMPANY

# 64 (NB) - Cone Clamp Termination
# Step-Up / Step-Down version
## Interface H - MIL-DTL-38999 SERIES III & IV

Polamco

**Interconnect Solutions Worldwide**

TABLE 1

| SHELL SIZE | A THREAD | ØB MAX | ØT MIN | C ±0,5 | D MAX | E MAX | F MAX | K ±0,5 |
|---|---|---|---|---|---|---|---|---|
| 09 | M12 x 1.0 | 18,0 | 6,7 | 12,0 | 29,6 | 21,4 | 35,1 | 16,3 |
| 11 | M15 x 1.0 | 21,0 | 9,9 | 12,5 | 30,4 | 24,5 | 36,9 | 17,2 |
| 13 | M18 x 1.0 | 24,5 | 12,8 | 13,1 | 31,3 | 28,5 | 38,4 | 19,4 |
| 15 | M22 x 1.0 | 29,0 | 16,0 | 13,5 | 31,7 | 31,3 | 39,9 | 21,0 |
| 17 | M25 x 1.0 | 32,5 | 19,2 | 14,5 | 32,5 | 34,4 | 41,6 | 22,8 |
| 19 | M28 x 1.0 | 35,5 | 21,4 | 15,5 | 32,8 | 38,7 | 43,2 | 25,3 |
| 21 | M31 x 1.0 | 37,0 | 24,6 | 16,0 | 33,6 | 40,9 | 44,8 | 26,1 |
| 23 | M34 x 1.0 | 40,0 | 27,7 | 16,5 | 34,5 | 43,9 | 46,3 | 27,6 |
| 25 | M37 x 1.0 | 43,5 | 30,9 | 17,1 | 34,9 | 46,6 | 47,8 | 29,1 |

TABLE 2

| ENTRY SIZE | ØG MIN | W MAX | ØH MAX | J ±0,5 | M ±0,5 |
|---|---|---|---|---|---|
| 09 | 6,6 | 20,7 | 16,0 | 15,0 | 7,8 |
| 11 | 9,3 | 23,8 | 19,0 | 15,0 | 8,6 |
| 13 | 12,6 | 27,0 | 22,0 | 15,0 | 10,2 |
| 15 | 14,6 | 28,6 | 26,5 | 15,0 | 10,4 |
| 17 | 17,7 | 31,8 | 29,8 | 15,0 | 12,4 |
| 19 | 19,8 | 35,0 | 33,0 | 18,0 | 15,4 |
| 21 | 23,0 | 38,1 | 35,0 | 18,0 | 17,3 |
| 23 | 26,2 | 39,7 | 38,0 | 18,0 | 18,8 |
| 25 | 29,1 | 44,5 | 41,0 | 18,0 | 22,4 |

64H1-17-15-2-Z-CC

SERIES
CONNECTOR INTERFACE
ANGLE
SHELL SIZE (TABLE 1)
ENTRY SIZE (TABLE 2)
MATERIAL
NICKEL ALUMINIUM BRONZE
FINISH
SHOT BLAST
CABLE CLAMP OPTION
OMIT FOR PLAIN NUT

CONE TERMINATION

**For tooling and assembly instructions see www.polamco.com**

Backshell supplied with Cone(s)
Sealing and strain relief achieved with Heat Shrink Boot for non CC versions (see page 354)
Adhesive if required for assembly (see page 352)
Screenbraid for EMC/RFI screening (see page 350)

DRAWING NOT TO SCALE, DIMENSIONS IN MM

SEE PAGES 18-26 FOR COMPLETE LIST OF AVAILABLE MATERIALS, FINISHES AND CONNECTOR INTERFACES
(DIMENSIONS, FORM AND O RING SUBJECT TO CHANGE DEPENDING ON BACKSHELL MATERIAL AND CONNECTOR INTERFACE)

THIS DRAWING IS THE PROPERTY OF POLAMCO LTD AND MUST NOT BE USED FOR
COMMERCIAL PURPOSES WITHOUT WRITTEN CONSENT OF THE COMPANY

# 35F - Cone Clamp Cable Sealing Backshell

## Interface F - MIL-DTL-38999 SERIES I

Polamco

**Interconnect Solutions Worldwide**

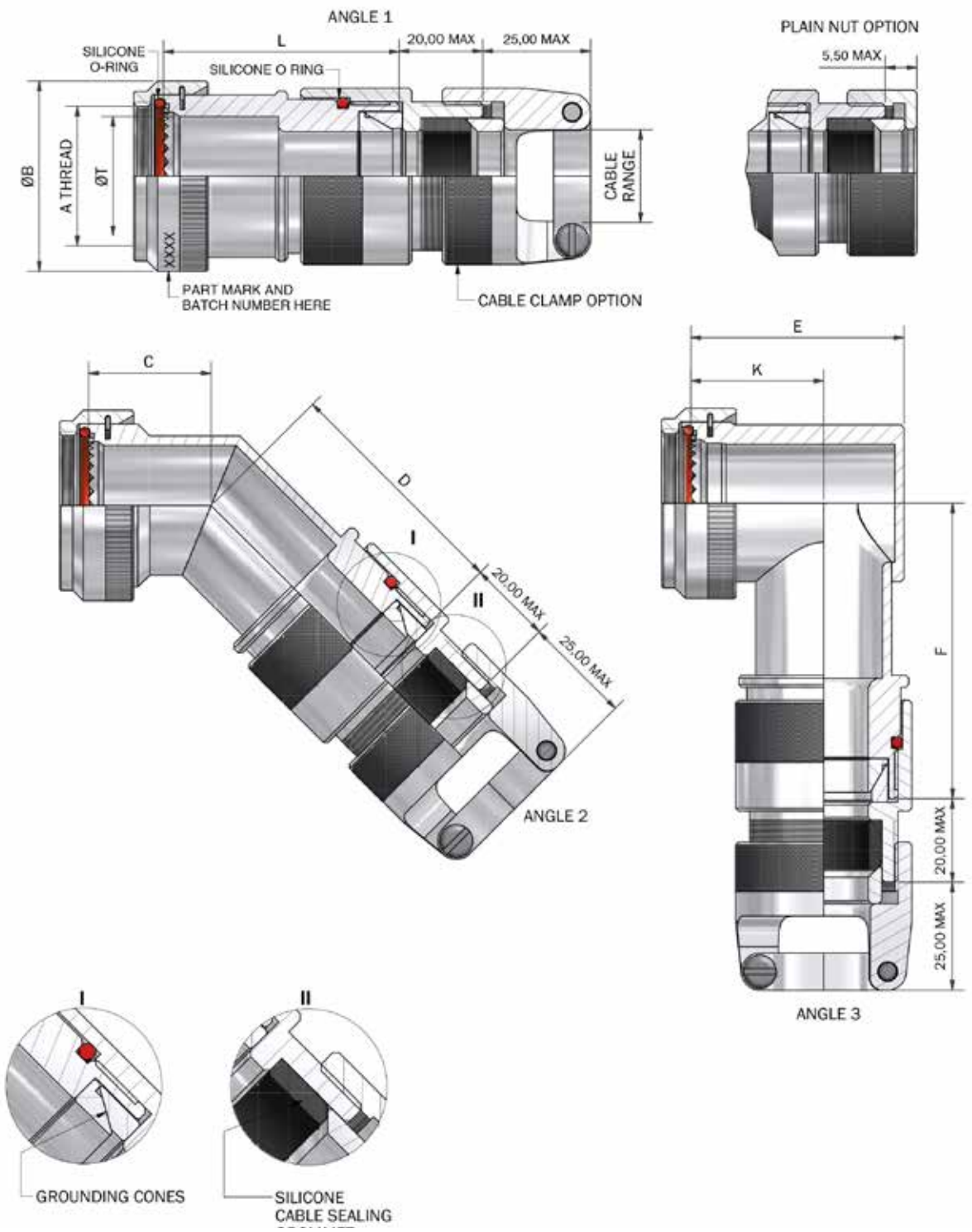


DRAWING NOT TO SCALE, DIMENSIONS IN MM

SEE PAGES 18-26 FOR COMPLETE LIST OF AVAILABLE MATERIALS, FINISHES AND CONNECTOR INTERFACES
(DIMENSIONS, FORM AND O RING SUBJECT TO CHANGE DEPENDING ON BACKSHELL MATERIAL AND CONNECTOR INTERFACE)





THIS DRAWING IS THE PROPERTY OF POLAMCO LTD AND MUST NOT BE USED FOR COMMERCIAL PURPOSES WITHOUT WRITTEN CONSENT OF THE COMPANY

# 35F - Cone Clamp Cable Sealing Backshell

## Interface F - MIL-DTL-38999 SERIES I

Polamco

**Interconnect Solutions Worldwide**

TABLE 1

| SHELL SIZE | A THREAD | ØB MAX | ØT MIN | MAX ENTRY | C ±0,5 | D MAX | E MAX | F MAX | K ±0,5 |
|---|---|---|---|---|---|---|---|---|---|
| 09 | 7/16-28 UNEF | 18,0 | 6,8 | - | 16,4 | 35,8 | 22,7 | 36,1 | 15,0 |
| 11 | 9/16-24 UNEF | 21,0 | 10,2 | 04 | 17,2 | 37,3 | 26,2 | 39,1 | 17,0 |
| 13 | 11/16-24 UNEF | 24,5 | 13,1 | 06 | 17,6 | 38,9 | 29,2 | 39,6 | 18,0 |
| 15 | 13/16-20 UNEF | 27,8 | 16,2 | 10 | 18,5 | 41,1 | 32,2 | 41,4 | 20,0 |
| 17 | 15/16-20 UNEF | 30,8 | 19,3 | 12 | 19,2 | 43,9 | 35,7 | 48,0 | 21,5 |
| 19 | 1 1/16-18 UNEF | 34,1 | 22,3 | 12 | 19,6 | 48,8 | 39,7 | 50,8 | 23,0 |
| 21 | 1 3/16-18 UNEF | 37,3 | 25,8 | 16 | 20,4 | 50,1 | 42,2 | 50,8 | 25,0 |
| 23 | 1 5/16-18 UNEF | 41,0 | 28,3 | 16 | 20,8 | 52,6 | 45,2 | 50,8 | 26,0 |
| 25 | 1 7/16-18 UNEF | 43,7 | 31,5 | 16 | 21,7 | 54,0 | 48,2 | 50,8 | 28,0 |

IF MAX ENTRY IS EXCEEDED, ADAPTOR ASSEMBLY IS SUPPLIED AS STYLE 2 (T2 DOES NOT FEATURE IN THE PART NUMBER)
IN WHICH CASE DIMENSIONS C, D, E, F & K DO NOT APPLY AND MIN L IS L3

TABLE 2

| ENTRY SIZE | CABLE RANGE |
|---|---|
| 04 | 3,2 - 7,9 |
| 06 | 6,4 - 11,1 |
| 08 | 9,8 - 14,3 |
| 10 | 8,9 - 15,9 |
| 12 | 12,7 - 19,1 |
| 16 | 15,9 - 23,8 |
| 20 | 22,2 - 31,8 |
| 24 | 25,4 - 34,9 |
| 28 | 31,8 - 41,3 |
| 32 | 36,5 - 47,6 |

TABLE 3

| CODE | FINISH |
|---|---|
| C | ELECTROLESS NICKEL |
| B | CADMIUM OLIVE DRAB OVER ELECTROLESS NICKEL |
| ZB | ZINC COBALT OLIVE DRAB OVER ELECTROLESS NICKEL |
| ZN | ZINC NICKEL BLACK PASSIVATE OVER ELECTROLESS NICKEL |

LIST NOT EXHAUSTIVE, SEE PLATING TABLE FOR OTHER OPTIONS

35F1-17-08-1-C-CC-L3

- SERIES
- CONNECTOR INTERFACE
- ANGLE
- SHELL SIZE (TABLE 1)
- SNTRY SIZE (TABLE 2)
- MATERIAL
  - ALUMINIUM ALLOY
- FINISH (TABLE 2)
- CABLE CLAMP OPTION
  - OMIT FOR PLAIN NUT
- LENGTH CODE (STRAIGHT ONLY)
  - 1/2" INCREMENTS, MINIMUM L2(=1")

**For tooling and assembly instructions see www.polamco.com**

Backshell supplied with Cone(s)
Sealing and strain relief achieved with Heat Shrink Boot for non CC versions (see page 354)
Adhesive if required for assembly (see page 352)
Screenbraid for EMC/RFI screening (see page 350)

DRAWING NOT TO SCALE, DIMENSIONS IN MM

SEE PAGES 18-26 FOR COMPLETE LIST OF AVAILABLE MATERIALS, FINISHES AND CONNECTOR INTERFACES
(DIMENSIONS, FORM AND O RING SUBJECT TO CHANGE DEPENDING ON BACKSHELL MATERIAL AND CONNECTOR INTERFACE)



THIS DRAWING IS THE PROPERTY OF POLAMCO LTD AND MUST NOT BE USED FOR
COMMERCIAL PURPOSES WITHOUT WRITTEN CONSENT OF THE COMPANY

# 35F - Cone Clamp Cable Sealing Backshell

## Interface F - MIL-DTL-38999 SERIES II

Polamco

**Interconnect Solutions Worldwide**

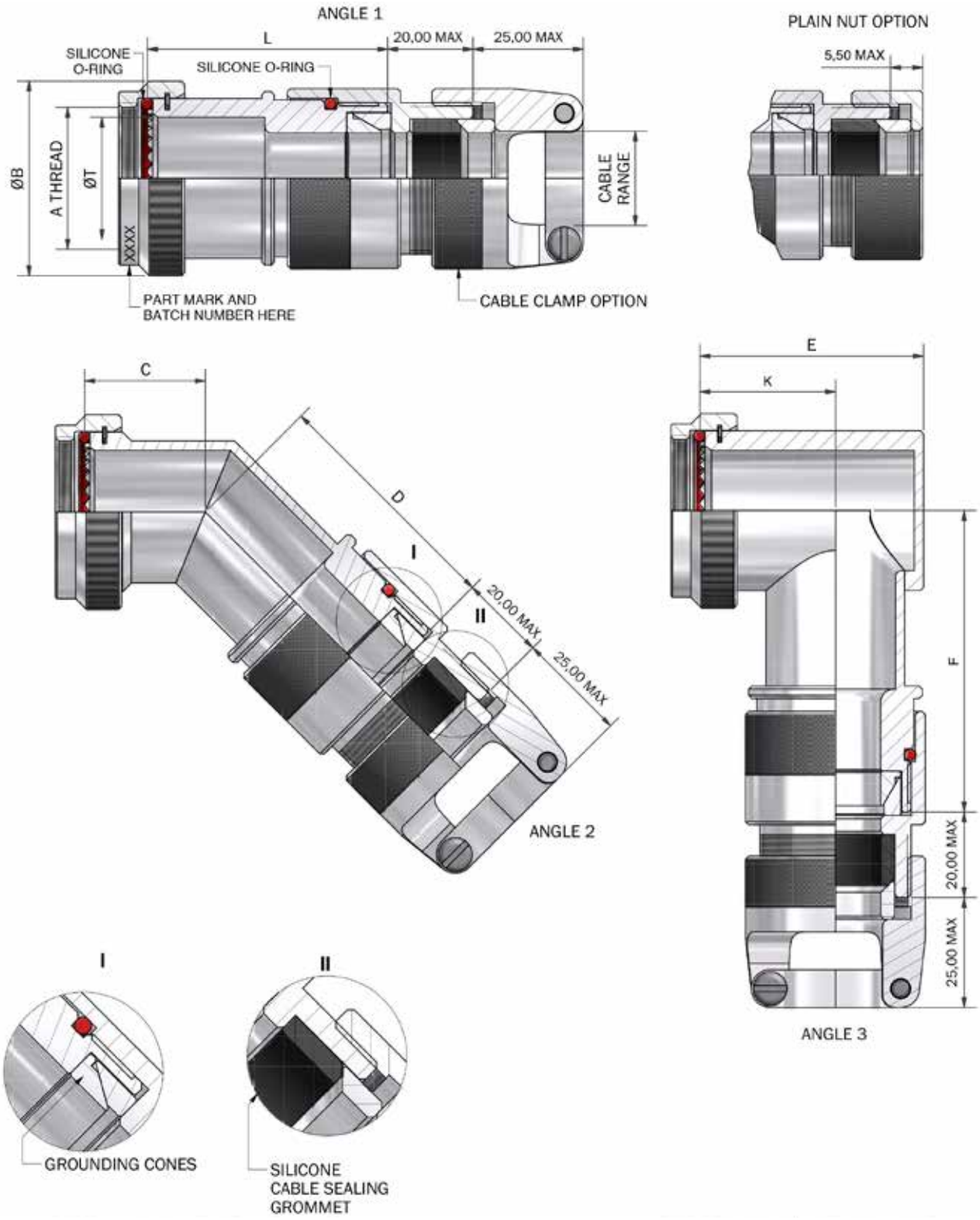


DRAWING NOT TO SCALE, DIMENSIONS IN MM

SEE PAGES 18-26 FOR COMPLETE LIST OF AVAILABLE MATERIALS, FINISHES AND CONNECTOR INTERFACES
(DIMENSIONS, FORM AND O RING SUBJECT TO CHANGE DEPENDING ON BACKSHELL MATERIAL AND CONNECTOR INTERFACE)





THIS DRAWING IS THE PROPERTY OF POLAMCO LTD AND MUST NOT BE USED FOR COMMERCIAL PURPOSES WITHOUT WRITTEN CONSENT OF THE COMPANY

# 35F - Cone Clamp Cable Sealing Backshell

## Interface F - MIL-DTL-38999 SERIES II

Polamco

**Interconnect Solutions Worldwide**

TABLE 1

| SHELL SIZE | A THREAD | ØB MAX | ØT MIN | MAX ENTRY | C ±0,5 | D MAX | E MAX | F MAX | K ±0,5 |
|---|---|---|---|---|---|---|---|---|---|
| 08 | 7/16-28 UNEF | 18,3 | 6,6 | - | 16,4 | 35,8 | 22,7 | 36,1 | 15,0 |
| 10 | 9/16-24 UNEF | 21,5 | 10,1 | 04 | 17,2 | 37,3 | 26,2 | 39,1 | 17,0 |
| 12 | 11/16-24 UNEF | 24,5 | 12,9 | 06 | 17,6 | 38,9 | 29,2 | 39,6 | 18,0 |
| 14 | 13/16-20 UNEF | 27,8 | 16,1 | 10 | 18,5 | 41,1 | 32,2 | 41,4 | 20,0 |
| 16 | 15/16-20 UNEF | 30,8 | 19,3 | 12 | 19,2 | 43,9 | 35,7 | 48,0 | 21,5 |
| 18 | 1 1/16-18 UNEF | 34,1 | 21,7 | 12 | 19,6 | 48,8 | 39,7 | 50,8 | 23,0 |
| 20 | 1 3/16-18 UNEF | 37,3 | 24,9 | 16 | 20,4 | 50,1 | 42,2 | 50,8 | 25,0 |
| 22 | 1 5/16-18 UNEF | 40,5 | 28,1 | 16 | 20,8 | 52,6 | 45,2 | 50,8 | 26,0 |
| 24 | 1 7/16-18 UNEF | 43,7 | 31,3 | 16 | 21,7 | 54,0 | 48,2 | 50,8 | 28,0 |

IF MAX ENTRY IS EXCEEDED, ADAPTOR ASSEMBLY IS SUPPLIED AS STYLE 2 (T2 DOES NOT FEATURE IN THE PART NUMBER) IN WHICH CASE DIMENSIONS C, D, E, F & K DO NOT APPLY AND MIN L IS L3

TABLE 2

| ENTRY SIZE | CABLE RANGE |
|---|---|
| 04 | 3,2 - 7,9 |
| 06 | 6,4 - 11,1 |
| 08 | 9,8 - 14,3 |
| 10 | 8,9 - 15,9 |
| 12 | 12,7 - 19,1 |
| 16 | 15,9 - 23,8 |
| 20 | 22,2 - 31,8 |
| 24 | 25,4 - 34,9 |
| 28 | 31,8 - 41,3 |
| 32 | 36,5 - 47,6 |

TABLE 3

| CODE | FINISH |
|---|---|
| C | ELECTROLESS NICKEL |
| B | CADMIUM OLIVE DRAB OVER ELECTROLESS NICKEL |
| ZB | ZINC COBALT OLIVE DRAB OVER ELECTROLESS NICKEL |
| ZN | ZINC NICKEL BLACK PASSIVATE OVER ELECTROLESS NICKEL |

LIST NOT EXHAUSTIVE, SEE PLATING TABLE FOR OTHER OPTIONS

35F1-16-08-1-C-CC-L3

- SERIES
- CONNECTOR INTERFACE
- ANGLE
- SHELL SIZE (TABLE 1)
- ENTRY SIZE (TABLE 2)
- MATERIAL
  - ALUMINIUM ALLOY
- FINISH (TABLE 3)
- CABLE CLAMP OPTION
  - OMIT FOR PLAIN NUT
- LENGTH CODE (STRAIGHT ONLY)
  - 1/2" INCREMENTS, MINIMUM L2(=1")

CONE TERMINATION

**For tooling and assembly instructions see www.polamco.com**

Backshell supplied with Cone(s)
Sealing and strain relief achieved with Heat Shrink Boot for non CC versions (see page 354)
Adhesive if required for assembly (see page 352)
Screenbraid for EMC/RFI screening (see page 350)

DRAWING NOT TO SCALE, DIMENSIONS IN MM

SEE PAGES 18-26 FOR COMPLETE LIST OF AVAILABLE MATERIALS, FINISHES AND CONNECTOR INTERFACES
(DIMENSIONS, FORM AND O RING SUBJECT TO CHANGE DEPENDING ON BACKSHELL MATERIAL AND CONNECTOR INTERFACE)

THIS DRAWING IS THE PROPERTY OF POLAMCO LTD AND MUST NOT BE USED FOR COMMERCIAL PURPOSES WITHOUT WRITTEN CONSENT OF THE COMPANY

# 35H - Cone Clamp Cable Sealing Backshell

## Interface H - MIL-DTL-38999 SERIES III & IV

Polamco

**Interconnect Solutions Worldwide**

COMPLIES WITH THE REQUIREMENTS OF SPECIFICATION BS EN 60529: 1992 to IP68.

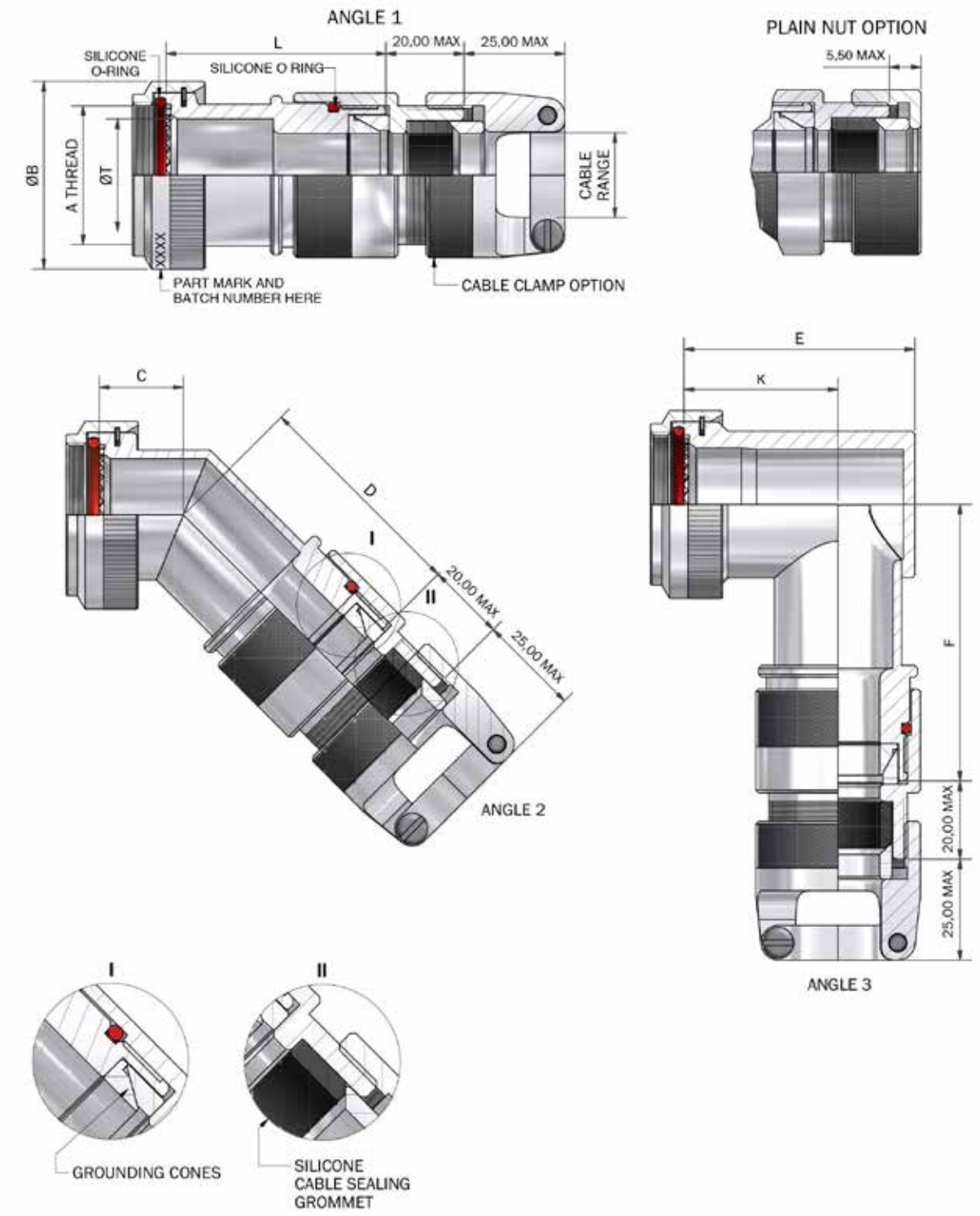


DRAWING NOT TO SCALE, DIMENSIONS IN MM

SEE PAGES 18-26 FOR COMPLETE LIST OF AVAILABLE MATERIALS, FINISHES AND CONNECTOR INTERFACES
(DIMENSIONS, FORM AND O RING SUBJECT TO CHANGE DEPENDING ON BACKSHELL MATERIAL AND CONNECTOR INTERFACE)





THIS DRAWING IS THE PROPERTY OF POLAMCO LTD AND MUST NOT BE USED FOR COMMERCIAL PURPOSES WITHOUT WRITTEN CONSENT OF THE COMPANY

# 35H - Cone Clamp Cable Sealing Backshell

## Interface H - MIL-DTL-38999 SERIES III & IV

Polamco

**Interconnect Solutions Worldwide**

TABLE 1

| SHELL SIZE | A THREAD | ØB MAX | ØT MIN | MAX ENTRY | C MAX | D MAX | E MAX | F MAX | K ±0,5 |
|---|---|---|---|---|---|---|---|---|---|
| 09 | M12 x 1.0 | 18,0 | 6,7 | - | 13,1 | 35,8 | 25,7 | 36,1 | 17,5 |
| 11 | M15 x 1.0 | 21,0 | 10,2 | 04 | 13,9 | 37,3 | 26,7 | 39,1 | 17,5 |
| 13 | M18 x 1.0 | 24,5 | 13,5 | 06 | 14,5 | 38,9 | 31,2 | 39,6 | 20,0 |
| 15 | M22 x 1.0 | 29,0 | 16,2 | 10 | 15,5 | 41,1 | 37,2 | 41,4 | 24,5 |
| 17 | M25 x 1.0 | 32,5 | 19,4 | 12 | 16,1 | 43,9 | 40,2 | 48,0 | 26,7 |
| 19 | M28 x 1.0 | 35,5 | 21,8 | 12 | 16,8 | 48,8 | 44,7 | 50,8 | 27,0 |
| 21 | M31 x 1.0 | 37,0 | 25,1 | 16 | 17,1 | 50,1 | 49,2 | 50,8 | 30,5 |
| 23 | M34 x 1.0 | 40,0 | 28,2 | 16 | 17,7 | 52,6 | 51,7 | 50,8 | 31,5 |
| 25 | M37 x 1.0 | 43,5 | 31,4 | 16 | 18,4 | 54,0 | 53,2 | 50,8 | 28,5 |

IF MAX ENTRY IS EXCEEDED, ADAPTOR ASSEMBLY IS SUPPLIED AS STYLE 2 (T2 DOES NOT FEATURE IN THE PART NUMBER) IN WHICH CASE DIMENSIONS C, D, E, F & K DO NOT APPLY AND MIN L IS L3

TABLE 2

| ENTRY SIZE | CABLE RANGE |
|---|---|
| 04 | 3,2 - 7,9 |
| 06 | 6,4 - 11,1 |
| 08 | 9,8 - 14,3 |
| 10 | 8,9 - 15,9 |
| 12 | 12,7 - 19,1 |
| 16 | 15,9 - 23,8 |
| 20 | 22,2 - 31,8 |
| 24 | 25,4 - 34,9 |
| 28 | 31,8 - 41,3 |
| 32 | 36,5 - 47,6 |

TABLE 3

| CODE | FINISH |
|---|---|
| C | ELECTROLESS NICKEL |
| B | CADMIUM OLIVE DRAB OVER ELECTROLESS NICKEL |
| ZB | ZINC COBALT OLIVE DRAB OVER ELECTROLESS NICKEL |
| ZN | ZINC NICKEL BLACK PASSIVATE OVER ELECTROLESS NICKEL |

LIST NOT EXHAUSTIVE, SEE PLATING TABLE FOR OTHER OPTIONS

35H1-17-08-1-C-CC-L3

- SERIES
- CONNECTOR INTERFACE
- ANGLE
- SHELL SIZE (TABLE 1)
- ENTRY SIZE (TABLE 2)
- MATERIAL
  - ALUMINIUM ALLOY
- FINISH (TABLE 3)
- CABLE CLAMP OPTION
  - OMIT FOR PLAIN NUT
- LENGTH CODE (STRAIGHT ONLY)
  - 1/2" INCREMENTS, MINIMUM L2(=1")

CONE TERMINATION

**For tooling and assembly instructions see www.polamco.com**

Backshell supplied with Cone(s)
Sealing and strain relief achieved with Heat Shrink Boot for non CC versions (see page 354)
Adhesive if required for assembly (see page 352)
Screenbraid for EMC/RFI screening (see page 350)

DRAWING NOT TO SCALE, DIMENSIONS IN MM

SEE PAGES 18-26 FOR COMPLETE LIST OF AVAILABLE MATERIALS, FINISHES AND CONNECTOR INTERFACES
(DIMENSIONS, FORM AND O RING SUBJECT TO CHANGE DEPENDING ON BACKSHELL MATERIAL AND CONNECTOR INTERFACE)

THIS DRAWING IS THE PROPERTY OF POLAMCO LTD AND MUST NOT BE USED FOR COMMERCIAL PURPOSES WITHOUT WRITTEN CONSENT OF THE COMPANY

# 35F (NE) - Cone Clamp Backshell Non-Environmental

## Interface F - MIL-DTL-38999 SERIES I

Polamco

**Interconnect Solutions Worldwide**

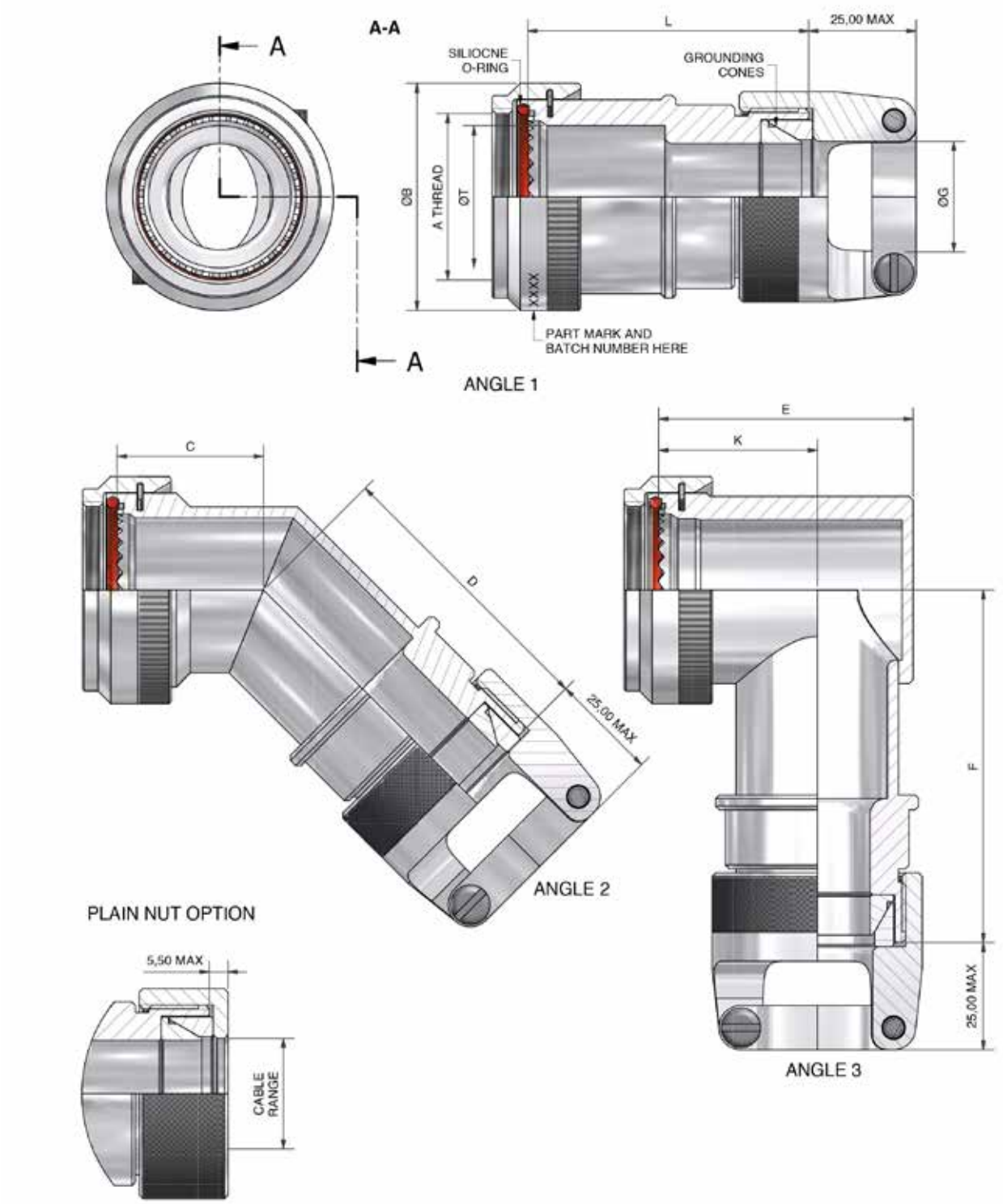


DRAWING NOT TO SCALE, DIMENSIONS IN MM

SEE PAGES 18-26 FOR COMPLETE LIST OF AVAILABLE MATERIALS, FINISHES AND CONNECTOR INTERFACES
(DIMENSIONS, FORM AND O RING SUBJECT TO CHANGE DEPENDING ON BACKSHELL MATERIAL AND CONNECTOR INTERFACE)





THIS DRAWING IS THE PROPERTY OF POLAMCO LTD AND MUST NOT BE USED FOR COMMERCIAL PURPOSES WITHOUT WRITTEN CONSENT OF THE COMPANY

# 35F (NE) - Cone Clamp Backshell Non-Environmental

## Interface F - MIL-DTL-38999 SERIES I

Polamco

**Interconnect Solutions Worldwide**

TABLE 1

| SHELL SIZE | A THREAD | ØB MAX | ØT MIN | MAX ENTRY | C ±0,5 | D MAX | E MAX | F MAX | K ±0,5 |
|---|---|---|---|---|---|---|---|---|---|
| 09 | 7/16-28UNEF | 18,0 | 6,8 | - | 16,4 | 35,8 | 22,7 | 36,1 | 15,0 |
| 11 | 9/16-24UNEF | 21,0 | 10,2 | 04 | 17,2 | 37,3 | 26,2 | 39,1 | 17,0 |
| 13 | 11/16-24UNEF | 24,5 | 13,1 | 06 | 17,6 | 38,9 | 29,2 | 39,6 | 18,0 |
| 15 | 13/16-20UNEF | 27,8 | 16,2 | 10 | 18,5 | 41,1 | 32,2 | 41,4 | 20,0 |
| 17 | 15/16-20UNEF | 30,8 | 19,3 | 12 | 19,2 | 43,9 | 35,7 | 48,0 | 21,5 |
| 19 | 1 1/16-18UNEF | 34,1 | 22,3 | 12 | 19,6 | 48,8 | 39,7 | 50,8 | 23,0 |
| 21 | 1 3/16-18UNEF | 37,3 | 25,8 | 16 | 20,4 | 50,1 | 42,2 | 50,8 | 25,0 |
| 23 | 1 5/16-18UNEF | 41,0 | 28,3 | 16 | 20,8 | 52,6 | 45,2 | 50,8 | 26,0 |
| 25 | 1 7/16-18UNEF | 43,7 | 31,5 | 16 | 21,7 | 54,0 | 48,2 | 50,8 | 28,0 |

IF MAX ENTRY IS EXCEEDED, ADAPTOR ASSEMBLY IS SUPPLIED AS A STYLE T2 (T2 DOES NOT FEATURE IN THE PART NUMBER) IN WHICH CASE DIMENSIONS C,D,E,F & K DO NOT APPLY AND MIN L IS L3.

TABLE 2

| ENTRY SIZE | ØG |
|---|---|
| 04 | 7,9 |
| 06 | 11,1 |
| 08 | 14,3 |
| 10 | 15,9 |
| 12 | 19,1 |
| 16 | 23,8 |
| 20 | 31,8 |
| 24 | 34,9 |
| 28 | 41,3 |
| 32 | 47,6 |

TABLE 3

| CODE | FINISH |
|---|---|
| C | ELECTROLESS NICKEL |
| B | CADMIUM OLIVE DRAB OVER ELECTROLESS NICKEL |
| ZB | ZINC COBALT OLIVE DRAB OVER ELECTROLESS NICKEL |
| ZN | ZINC NICKEL BLACK PASSIVATE OVER ELECTROLESS NICKEL |

LIST NOT EXHAUSTIVE, SEE PLATING TABLE FOR OTHER OPTIONS

35F1-17-08-1-C-NE-CC-L3

- SERIES
- CONNECTOR INTERFACE
- ANGLE
- SHELL SIZE (TABLE 1)
- ENTRY SIZE (TABLE 2)
- MATERIAL
  - ALUMINIUM ALLOY
- FINISH (TABLE 3)
- NON ENVIRONMENTAL OPTION
- CABLE CLAMP OPTION
  - OMIT FOR PLAIN NUT
- LENGTH CODE (STRAIGHT ONLY)
  - (1/2" INCREMENTS, MINIMUM L2 = 1")

CONE TERMINATION

**For tooling and assembly instructions see www.polamco.com**

Backshell supplied with Cone(s)
Sealing and strain relief achieved with Heat Shrink Boot for non CC versions (see page 354)
Adhesive if required for assembly (see page 352)
Screenbraid for EMC/RFI screening (see page 350)

DRAWING NOT TO SCALE, DIMENSIONS IN MM

SEE PAGES 18-26 FOR COMPLETE LIST OF AVAILABLE MATERIALS, FINISHES AND CONNECTOR INTERFACES
(DIMENSIONS, FORM AND O RING SUBJECT TO CHANGE DEPENDING ON BACKSHELL MATERIAL AND CONNECTOR INTERFACE)

THIS DRAWING IS THE PROPERTY OF POLAMCO LTD AND MUST NOT BE USED FOR COMMERCIAL PURPOSES WITHOUT WRITTEN CONSENT OF THE COMPANY

# 35F (NE) - Cone Clamp Backshell Non-Environmental

## Interface F - MIL-DTL-38999 SERIES II

Polamco

**Interconnect Solutions Worldwide**

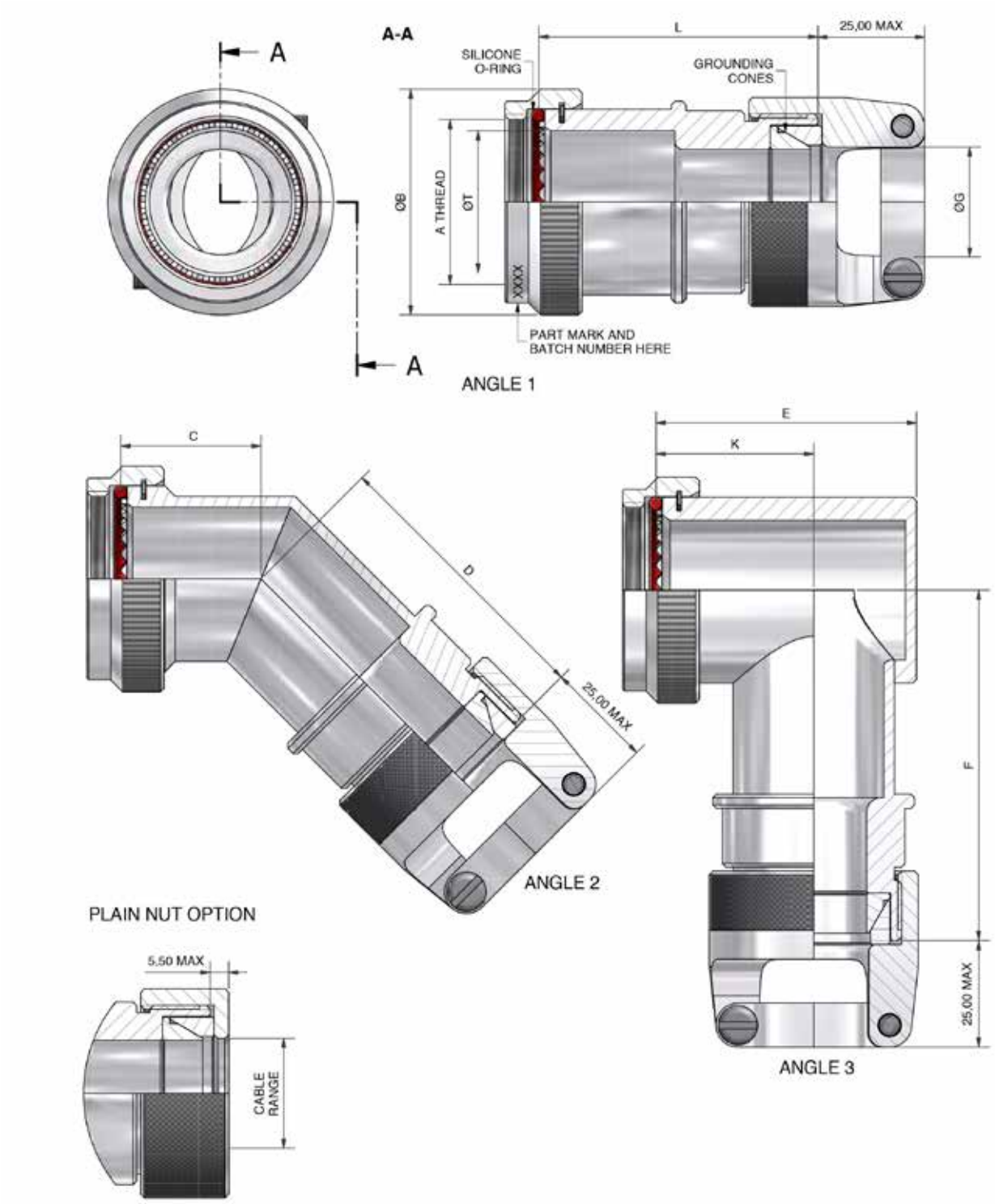


DRAWING NOT TO SCALE, DIMENSIONS IN MM

SEE PAGES 18-26 FOR COMPLETE LIST OF AVAILABLE MATERIALS, FINISHES AND CONNECTOR INTERFACES
(DIMENSIONS, FORM AND O RING SUBJECT TO CHANGE DEPENDING ON BACKSHELL MATERIAL AND CONNECTOR INTERFACE)





THIS DRAWING IS THE PROPERTY OF POLAMCO LTD AND MUST NOT BE USED FOR COMMERCIAL PURPOSES WITHOUT WRITTEN CONSENT OF THE COMPANY

# 35F (NE) - Cone Clamp Backshell Non-Environmental

## Interface F - MIL-DTL-38999 SERIES II

Polamco

**Interconnect Solutions Worldwide**

TABLE 1

| SHELL SIZE | A THREAD | ØB MAX | ØT MIN | MAX ENTRY | C ±0,5 | D MAX | E MAX | F MAX | K ±0,5 |
|---|---|---|---|---|---|---|---|---|---|
| 08 | 7/16-28UNEF | 18,3 | 6,6 | - | 16,4 | 35,8 | 22,7 | 36,1 | 15,0 |
| 10 | 9/16-24UNEF | 21,5 | 10,1 | 04 | 17,2 | 37,3 | 26,2 | 39,1 | 17,0 |
| 12 | 11/16-24UNEF | 24,5 | 12,9 | 06 | 17,6 | 38,9 | 29,2 | 39,6 | 18,0 |
| 14 | 13/16-20UNEF | 27,8 | 16,1 | 10 | 18,5 | 41,1 | 32,2 | 41,4 | 20,0 |
| 16 | 15/16-20UNEF | 30,8 | 19,3 | 12 | 19,2 | 43,9 | 35,7 | 48,0 | 21,5 |
| 18 | 1 1/16-18UNEF | 34,1 | 21,7 | 12 | 19,6 | 48,8 | 39,7 | 50,8 | 23,0 |
| 20 | 1 3/16-18UNEF | 37,3 | 24,9 | 16 | 20,4 | 50,1 | 42,2 | 50,8 | 25,0 |
| 22 | 1 5/16-18UNEF | 40,5 | 28,1 | 16 | 20,8 | 52,6 | 45,2 | 50,8 | 26,0 |
| 24 | 1 7/16-18UNEF | 43,7 | 31,3 | 16 | 21,7 | 54,0 | 48,2 | 50,8 | 28,0 |

IF MAX ENTRY IS EXCEEDED, ADAPTOR ASSEMBLY IS SUPPLIED AS A STYLE T2 (T2 DOES NOT FEATURE IN THE PART NUMBER) IN WHICH CASE DIMENSIONS C,D,E,F & K DO NOT APPLY AND MIN L IS L3.

TABLE 2

| ENTRY SIZE | ØG MIN |
|---|---|
| 04 | 7,9 |
| 06 | 11,1 |
| 08 | 14,3 |
| 10 | 15,9 |
| 12 | 19,1 |
| 16 | 23,8 |
| 20 | 31,8 |
| 24 | 34,9 |
| 28 | 41,3 |
| 32 | 47,6 |

TABLE 3

| CODE | FINISH |
|---|---|
| C | ELECTROLESS NICKEL |
| B | CADMIUM OLIVE DRAB OVER ELECTROLESS NICKEL |
| ZB | ZINC COBALT OLIVE DRAB OVER ELECTROLESS NICKEL |
| ZN | ZINC NICKEL BLACK PASSIVATE OVER ELECTROLESS NICKEL |

LIST NOT EXHAUSTIVE, SEE PLATING TABLE FOR OTHER OPTIONS

35F1-16-08-1-C-NE-CC-L3

- SERIES
- CONNECTOR INTERFACE
- ANGLE
- SHELL SIZE (TABLE 1)
- ENTRY SIZE (TABLE 2)
- MATERIAL
  - ALUMINIUM ALLOY
- FINISH (TABLE 3)
- NON ENVIRONMENTAL OPTION
- CABLE CLAMP OPTION
  - OMIT FOR PLAIN NUT
- LENGTH CODE (STRAIGHT ONLY)
  - (1/2" INCREMENTS, MINIMUM L2 = 1")

CONE TERMINATION

**For tooling and assembly instructions see www.polamco.com**

Backshell supplied with Cone(s)
Sealing and strain relief achieved with Heat Shrink Boot for non CC versions (see page 354)
Adhesive if required for assembly (see page 352)
Screenbraid for EMC/RFI screening (see page 350)

DRAWING NOT TO SCALE, DIMENSIONS IN MM

SEE PAGES 18-26 FOR COMPLETE LIST OF AVAILABLE MATERIALS, FINISHES AND CONNECTOR INTERFACES
(DIMENSIONS, FORM AND O RING SUBJECT TO CHANGE DEPENDING ON BACKSHELL MATERIAL AND CONNECTOR INTERFACE)

THIS DRAWING IS THE PROPERTY OF POLAMCO LTD AND MUST NOT BE USED FOR COMMERCIAL PURPOSES WITHOUT WRITTEN CONSENT OF THE COMPANY

# 35H (NE) - Cone Clamp Backshell Non-Environmental

## Interface H - MIL-DTL-38999 SERIES III & IV

Polamco

**Interconnect Solutions Worldwide**

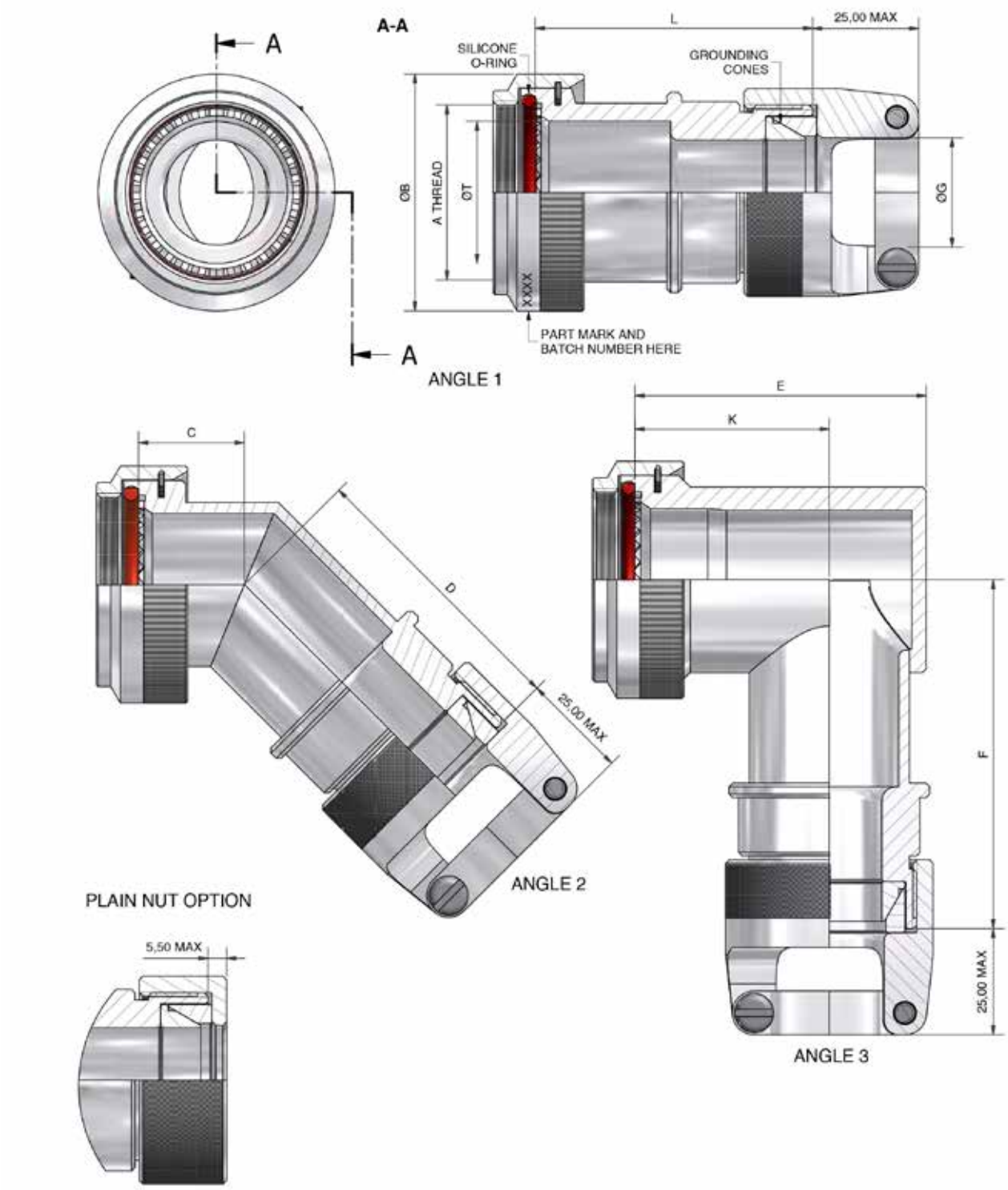


DRAWING NOT TO SCALE, DIMENSIONS IN MM

SEE PAGES 18-26 FOR COMPLETE LIST OF AVAILABLE MATERIALS, FINISHES AND CONNECTOR INTERFACES
(DIMENSIONS, FORM AND O RING SUBJECT TO CHANGE DEPENDING ON BACKSHELL MATERIAL AND CONNECTOR INTERFACE)





THIS DRAWING IS THE PROPERTY OF POLAMCO LTD AND MUST NOT BE USED FOR COMMERCIAL PURPOSES WITHOUT WRITTEN CONSENT OF THE COMPANY

# 35H (NE) - Cone Clamp Backshell Non-Environmental

## Interface H - MIL-DTL-38999 SERIES III & IV

Polamco

**Interconnect Solutions Worldwide**

TABLE 1

| SHELL SIZE | A THREAD | ØB MAX | ØT MIN | MAX ENTRY | C ±0,5 | D MAX | E MAX | F MAX | K ±0,5 |
|---|---|---|---|---|---|---|---|---|---|
| 09 | M12x1.0 | 18,0 | 6,7 | - | 13,1 | 35,8 | 25,7 | 36,1 | 17,5 |
| 11 | M15x1.0 | 21,0 | 10,2 | 04 | 13,9 | 37,3 | 26,7 | 39,1 | 17,5 |
| 13 | M18x1.0 | 24,5 | 13,5 | 06 | 14,5 | 38,9 | 31,2 | 39,6 | 20,0 |
| 15 | M22x1.0 | 29,0 | 16,2 | 10 | 15,5 | 41,1 | 37,2 | 41,4 | 24,5 |
| 17 | M25x1.0 | 32,5 | 19,4 | 12 | 16,1 | 43,9 | 40,2 | 48,0 | 26,7 |
| 19 | M28x1.0 | 35,5 | 21,8 | 12 | 16,8 | 48,8 | 44,7 | 50,8 | 27,0 |
| 21 | M31x1.0 | 37,0 | 25,1 | 16 | 17,1 | 50,1 | 49,2 | 50,8 | 30,5 |
| 23 | M34x1.0 | 40,0 | 28,2 | 16 | 17,7 | 52,6 | 51,7 | 50,8 | 31,5 |
| 25 | M37x1.0 | 43,5 | 31,4 | 16 | 18,4 | 54,0 | 53,2 | 50,8 | 28,5 |

IF MAX ENTRY IS EXCEEDED, ADAPTOR ASSEMBLY IS SUPPLIED AS A STYLE T2 (T2 DOES NOT FEATURE IN THE PART NUMBER) IN WHICH CASE DIMENSIONS C,D,E,F & K DO NOT APPLY AND MIN L IS L3.

TABLE 2

| ENTRY SIZE | ØG MIN |
|---|---|
| 04 | 7,9 |
| 06 | 11,1 |
| 08 | 14,3 |
| 10 | 15,9 |
| 12 | 19,1 |
| 16 | 23,8 |
| 20 | 31,8 |
| 24 | 34,9 |
| 28 | 41,3 |
| 32 | 47,6 |

TABLE 3

| CODE | FINISH |
|---|---|
| C | ELECTROLESS NICKEL |
| B | CADMIUM OLIVE DRAB OVER ELECTROLESS NICKEL |
| ZB | ZINC COBALT OLIVE DRAB OVER ELECTROLESS NICKEL |
| ZN | ZINC NICKEL BLACK PASSIVATE OVER ELECTROLESS NICKEL |

LIST NOT EXHAUSTIVE, SEE PLATING TABLE FOR OTHER OPTIONS

35H1-17-08-1-C-NE-CC-L3

- SERIES
- CONNECTOR INTERFACE
- ANGLE
- SHELL SIZE (TABLE 1)
- ENTRY SIZE (TABLE 2)
- MATERIAL
  - ALUMINIUM ALLOY
- FINISH (TABLE 3)
- NON ENVIRONMENTAL OPTION
- CABLE CLAMP OPTION
  - OMIT FOR PLAIN NUT
- LENGTH CODE (STRAIGHT ONLY)
  - (1/2" INCREMENTS, MINIMUM L2 = 1")

CONE TERMINATION

**For tooling and assembly instructions see www.polamco.com**

Backshell supplied with Cone(s)
Sealing and strain relief achieved with Heat Shrink Boot for non CC versions (see page 354)
Adhesive if required for assembly (see page 352)
Screenbraid for EMC/RFI screening (see page 350)

DRAWING NOT TO SCALE, DIMENSIONS IN MM

SEE PAGES 18-26 FOR COMPLETE LIST OF AVAILABLE MATERIALS, FINISHES AND CONNECTOR INTERFACES
(DIMENSIONS, FORM AND O RING SUBJECT TO CHANGE DEPENDING ON BACKSHELL MATERIAL AND CONNECTOR INTERFACE)

THIS DRAWING IS THE PROPERTY OF POLAMCO LTD AND MUST NOT BE USED FOR COMMERCIAL PURPOSES WITHOUT WRITTEN CONSENT OF THE COMPANY

# 36F - Cone Clamp Cable Sealing Backshell

## Interface F - MIL-DTL-38999 SERIES I

Polamco

**Interconnect Solutions Worldwide**

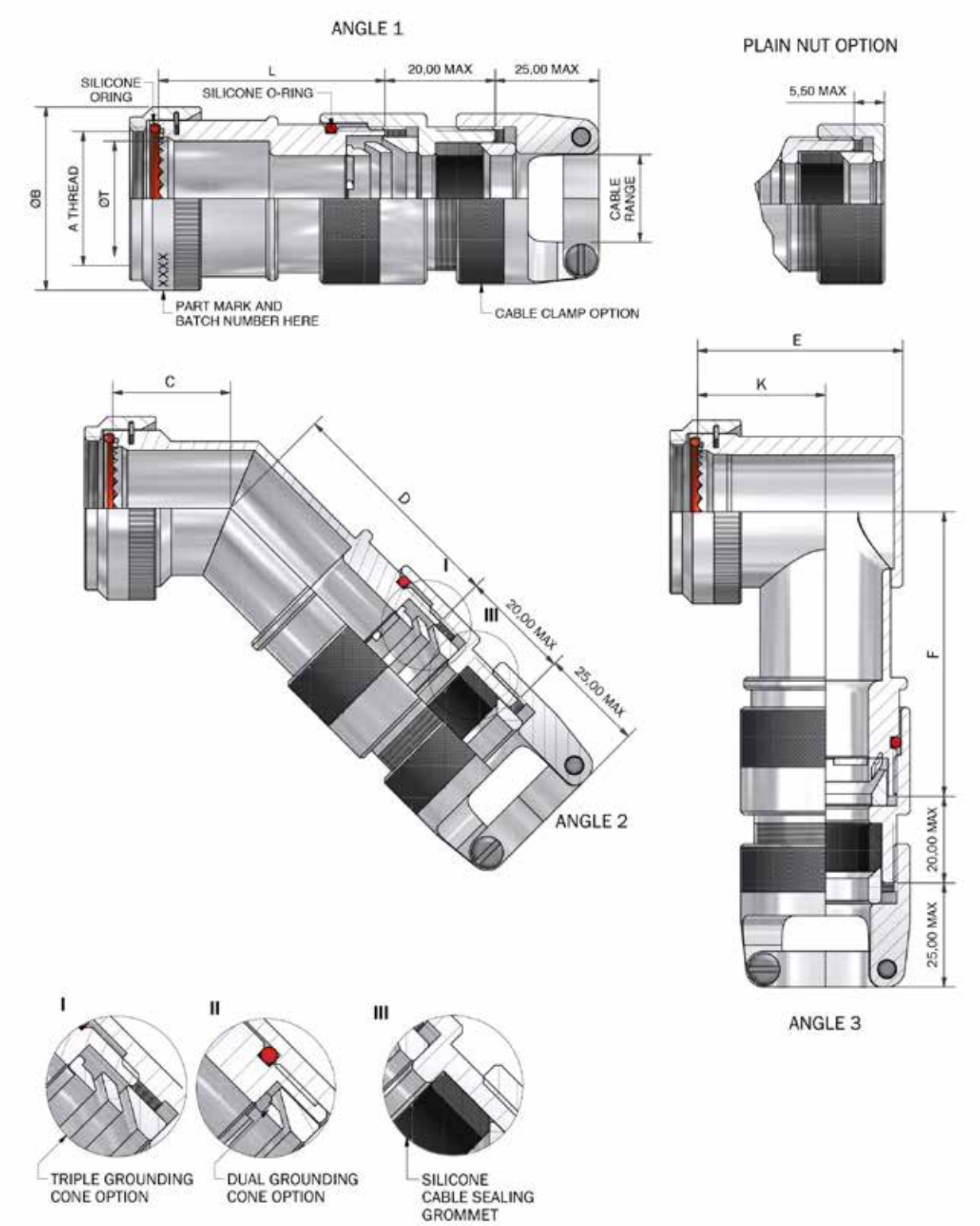


DRAWING NOT TO SCALE, DIMENSIONS IN MM

SEE PAGES 18-26 FOR COMPLETE LIST OF AVAILABLE MATERIALS, FINISHES AND CONNECTOR INTERFACES
(DIMENSIONS, FORM AND O RING SUBJECT TO CHANGE DEPENDING ON BACKSHELL MATERIAL AND CONNECTOR INTERFACE)





THIS DRAWING IS THE PROPERTY OF POLAMCO LTD AND MUST NOT BE USED FOR COMMERCIAL PURPOSES WITHOUT WRITTEN CONSENT OF THE COMPANY

# 36F - Cone Clamp Cable Sealing Backshell

## Interface F - MIL-DTL-38999 SERIES I

Polamco

**Interconnect Solutions Worldwide**

TABLE 1

| SHELL SIZE | A THREAD | ØB MAX | ØT MIN | MAX ENTRY | C ±0,5 | D MAX | E MAX | F MAX | K ±0,5 |
|---|---|---|---|---|---|---|---|---|---|
| 09 | 7/16-28 UNEF | 18,0 | 6,8 | - | 16,4 | 35,8 | 22,7 | 36,1 | 15,0 |
| 11 | 9/16-24 UNEF | 21,0 | 10,2 | 04 | 17,2 | 37,3 | 26,2 | 39,1 | 17,0 |
| 13 | 11/16-24 UNEF | 24,5 | 13,1 | 06 | 17,6 | 38,9 | 29,2 | 39,6 | 18,0 |
| 15 | 13/16-20 UNEF | 27,8 | 16,2 | 10 | 18,5 | 41,1 | 32,2 | 41,4 | 20,0 |
| 17 | 15/16-20 UNEF | 30,8 | 19,3 | 12 | 19,2 | 43,9 | 35,7 | 48,0 | 21,5 |
| 19 | 1 1/16-18 UNEF | 34,1 | 22,3 | 12 | 19,6 | 48,8 | 39,7 | 50,8 | 23,0 |
| 21 | 1 3/16-18 UNEF | 37,3 | 25,8 | 16 | 20,4 | 50,1 | 42,2 | 50,8 | 25,0 |
| 23 | 1 5/16-18 UNEF | 41,0 | 28,3 | 16 | 20,8 | 52,6 | 45,2 | 50,8 | 26,0 |
| 25 | 1 7/16-18 UNEF | 43,7 | 31,5 | 16 | 21,7 | 54,0 | 48,2 | 50,8 | 28,0 |

IF MAX ENTRY IS EXCEEDED, ADAPTOR ASSEMBLY IS SUPPLIED AS STYLE 2 (T2 DOES NOT FEATURE IN THE PART NUMBER) IN WHICH CASE DIMENSIONS C, D, E, F & K DO NOT APPLY AND MIN L IS L3

TABLE 2

| ENTRY SIZE | CABLE RANGE |
|---|---|
| 04 | 3,2 - 7,9 |
| 06 | 6,4 - 11,1 |
| 08 | 9,8 - 14,3 |
| 10 | 8,9 - 15,9 |
| 12 | 12,7 - 19,1 |
| 16 | 15,9 - 23,8 |
| 20 | 22,2 - 31,8 |
| 24 | 25,4 - 34,9 |
| 28 | 31,8 - 41,3 |
| 32 | 36,5 - 47,6 |

TABLE 3

| CODE | FINISH |
|---|---|
| C | ELECTROLESS NICKEL |
| B | CADMIUM OLIVE DRAB OVER ELECTROLESS NICKEL |
| ZB | ZINC COBALT OLIVE DRAB OVER ELECTROLESS NICKEL |
| ZN | ZINC NICKEL BLACK PASSIVATE OVER ELECTROLESS NICKEL |

LIST NOT EXHAUSTIVE, SEE PLATING TABLE FOR OTHER OPTIONS

36F1-17-08-1-C-CC-L3-T

- SERIES
- CONNECTOR INTERFACE
- ANGLE
- SHELL SIZE (TABLE 1)
- ENTRY SIZE (TABLE 2)
- MATERIAL
  - ALUMINIUM ALLOY
- FINISH (TABLE 3)
- CABLE CLAMP OPTION
  - OMIT FOR PLAIN NUT
- LENGTH CODE (STRAIGHT ONLY)
  - 1/2" INCREMENTS, MINIMUM L2(=1")
- GROUNDING CONE OPTION
  - D - DUAL CONE
  - T - TRIPLE CONE

**For tooling and assembly instructions see www.polamco.com**

Backshell supplied with Cone(s)
Sealing and strain relief achieved with Heat Shrink Boot for non CC versions (see page 354)
Adhesive if required for assembly (see page 352)
Screenbraid for EMC/RFI screening (see page 350)

DRAWING NOT TO SCALE, DIMENSIONS IN MM

SEE PAGES 18-26 FOR COMPLETE LIST OF AVAILABLE MATERIALS, FINISHES AND CONNECTOR INTERFACES
(DIMENSIONS, FORM AND O RING SUBJECT TO CHANGE DEPENDING ON BACKSHELL MATERIAL AND CONNECTOR INTERFACE)

THIS DRAWING IS THE PROPERTY OF POLAMCO LTD AND MUST NOT BE USED FOR COMMERCIAL PURPOSES WITHOUT WRITTEN CONSENT OF THE COMPANY

# 36F - Cone Clamp Cable Sealing Backshell

## Interface F - MIL-DTL-38999 SERIES II

Polamco

**Interconnect Solutions Worldwide**

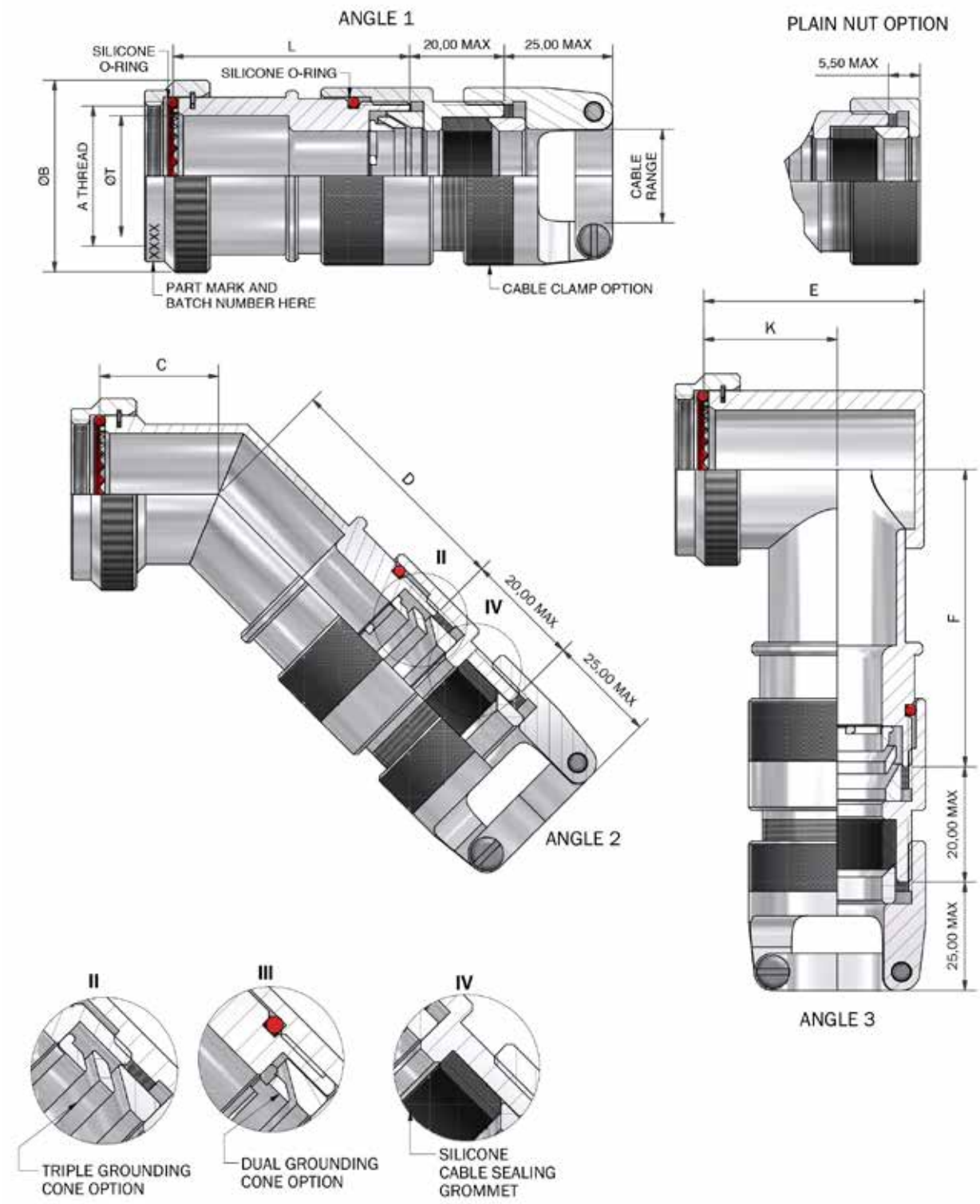


DRAWING NOT TO SCALE, DIMENSIONS IN MM

SEE PAGES 18-26 FOR COMPLETE LIST OF AVAILABLE MATERIALS, FINISHES AND CONNECTOR INTERFACES
(DIMENSIONS, FORM AND O RING SUBJECT TO CHANGE DEPENDING ON BACKSHELL MATERIAL AND CONNECTOR INTERFACE)





THIS DRAWING IS THE PROPERTY OF POLAMCO LTD AND MUST NOT BE USED FOR COMMERCIAL PURPOSES WITHOUT WRITTEN CONSENT OF THE COMPANY

# 36F - Cone Clamp Cable Sealing Backshell

## Interface F - MIL-DTL-38999 SERIES II

Polamco

**Interconnect Solutions Worldwide**

TABLE 1

| SHELL SIZE | A THREAD | ØB MAX | ØT MIN | MAX ENTRY | C ±0,5 | D MAX | E MAX | F MAX | K ±0,5 |
|---|---|---|---|---|---|---|---|---|---|
| 08 | 7/16-28 UNEF | 18,3 | 6,6 | - | 16,4 | 35,8 | 22,7 | 36,1 | 15,0 |
| 10 | 9/16-24 UNEF | 21,5 | 10,1 | 04 | 17,2 | 37,3 | 26,2 | 39,1 | 17,0 |
| 12 | 11/16-24 UNEF | 24,5 | 12,9 | 06 | 17,6 | 38,9 | 29,2 | 39,6 | 18,0 |
| 14 | 13/16-20 UNEF | 27,8 | 16,1 | 10 | 18,5 | 41,1 | 32,2 | 41,4 | 20,0 |
| 16 | 15/16-20 UNEF | 30,8 | 19,3 | 12 | 19,2 | 43,9 | 35,7 | 48,0 | 21,5 |
| 18 | 1 1/16-18 UNEF | 34,1 | 21,7 | 12 | 19,6 | 48,8 | 39,7 | 50,8 | 23,0 |
| 20 | 1 3/16-18 UNEF | 37,3 | 24,9 | 16 | 20,4 | 50,1 | 42,2 | 50,8 | 25,0 |
| 22 | 1 5/16-18 UNEF | 40,5 | 28,1 | 16 | 20,8 | 52,6 | 45,2 | 50,8 | 26,0 |
| 24 | 1 7/16-18 UNEF | 43,7 | 31,3 | 16 | 21,7 | 54,0 | 48,2 | 50,8 | 28,0 |

IF MAX ENTRY IS EXCEEDED, ADAPTOR ASSEMBLY IS SUPPLIED AS STYLE 2 (T2 DOES NOT FEATURE IN THE PART NUMBER) IN WHICH CASE DIMENSIONS C, D, E, F & K DO NOT APPLY AND MIN L IS L3

TABLE 2

| ENTRY SIZE | CABLE RANGE |
|---|---|
| 04 | 3,2 - 7,9 |
| 06 | 6,4 - 11,1 |
| 08 | 9,8 - 14,3 |
| 10 | 8,9 - 15,9 |
| 12 | 12,7 - 19,1 |
| 16 | 15,9 - 23,8 |
| 20 | 22,2 - 31,8 |
| 24 | 25,4 - 34,9 |
| 28 | 31,8 - 41,3 |
| 32 | 36,5 - 47,6 |

TABLE 3

| CODE | FINISH |
|---|---|
| C | ELECTROLESS NICKEL |
| B | CADMIUM OLIVE DRAB OVER ELECTROLESS NICKEL |
| ZB | ZINC COBALT OLIVE DRAB OVER ELECTROLESS NICKEL |
| ZN | ZINC NICKEL BLACK PASSIVATE OVER ELECTROLESS NICKEL |

LIST NOT EXHAUSTIVE, SEE PLATING TABLE FOR OTHER OPTIONS

36F1-16-08-1-C-CC-L3-T

- SERIES
- CONNECTOR INTERFACE
- ANGLE
- SHELL SIZE (TABLE 1)
- ENTRY SIZE (TABLE 2)
- MATERIAL
  - ALUMINIUM ALLOY
- FINISH (TABLE 3)
- CABLE CLAMP OPTION
  - OMIT FOR PLAIN NUT
- LENGTH CODE (STRAIGHT ONLY)
  - 1/2" INCREMENTS, MINIMUM L2(=1")
- GROUNDING CONE OPTION
  - D - DUAL CONE
  - T - TRIPLE CONE

**For tooling and assembly instructions see www.polamco.com**

Backshell supplied with Cone(s)
Sealing and strain relief achieved with Heat Shrink Boot for non CC versions (see page 354)
Adhesive if required for assembly (see page 352)
Screenbraid for EMC/RFI screening (see page 350)

DRAWING NOT TO SCALE, DIMENSIONS IN MM

SEE PAGES 18-26 FOR COMPLETE LIST OF AVAILABLE MATERIALS, FINISHES AND CONNECTOR INTERFACES
(DIMENSIONS, FORM AND O RING SUBJECT TO CHANGE DEPENDING ON BACKSHELL MATERIAL AND CONNECTOR INTERFACE)

THIS DRAWING IS THE PROPERTY OF POLAMCO LTD AND MUST NOT BE USED FOR COMMERCIAL PURPOSES WITHOUT WRITTEN CONSENT OF THE COMPANY

# 36H - Cone Clamp Cable Sealing Backshell

## Interface H - MIL-DTL-38999 SERIES III & IV

Polamco

**Interconnect Solutions Worldwide**

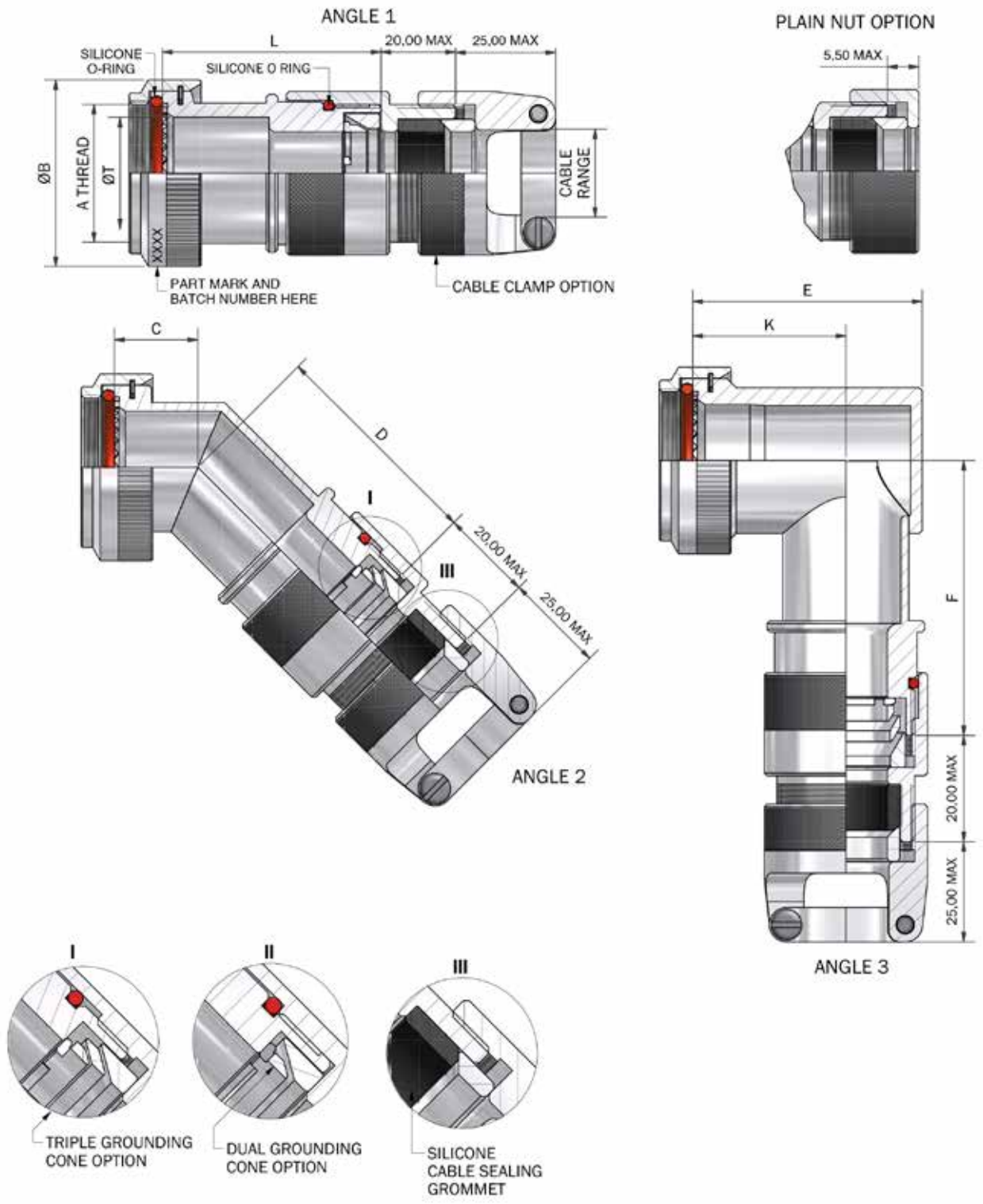


DRAWING NOT TO SCALE, DIMENSIONS IN MM

SEE PAGES 18-26 FOR COMPLETE LIST OF AVAILABLE MATERIALS, FINISHES AND CONNECTOR INTERFACES
(DIMENSIONS, FORM AND O RING SUBJECT TO CHANGE DEPENDING ON BACKSHELL MATERIAL AND CONNECTOR INTERFACE)





THIS DRAWING IS THE PROPERTY OF POLAMCO LTD AND MUST NOT BE USED FOR COMMERCIAL PURPOSES WITHOUT WRITTEN CONSENT OF THE COMPANY

# 36H - Cone Clamp Cable Sealing Backshell

## Interface H - MIL-DTL-38999 SERIES III & IV

Polamco

**Interconnect Solutions Worldwide**

TABLE 1

| SHELL SIZE | A THREAD | ØB MAX | MAX ENTRY | ØT MIN | C MAX | D MAX | E MAX | F MAX | K ±0,5 |
|---|---|---|---|---|---|---|---|---|---|
| 09 | M12 x 1.0 | 18,0 | - | 6,7 | 13,1 | 35,8 | 25,7 | 36,1 | 17,5 |
| 11 | M15 x 1.0 | 21,0 | 04 | 10,2 | 13,9 | 37,3 | 26,7 | 39,1 | 17,5 |
| 13 | M18 x 1.0 | 24,5 | 06 | 13,5 | 14,5 | 38,9 | 31,2 | 39,6 | 20,0 |
| 15 | M22 x 1.0 | 29,0 | 10 | 16,2 | 15,5 | 41,1 | 37,2 | 41,4 | 24,5 |
| 17 | M25 x 1.0 | 32,5 | 12 | 19,4 | 16,1 | 43,9 | 40,2 | 48,0 | 26,7 |
| 19 | M28 x 1.0 | 35,5 | 12 | 21,8 | 16,8 | 48,8 | 44,7 | 50,8 | 27,0 |
| 21 | M31 x 1.0 | 37,0 | 16 | 25,1 | 17,1 | 50,1 | 49,2 | 50,8 | 30,5 |
| 23 | M34 x 1.0 | 40,0 | 16 | 28,2 | 17,7 | 52,6 | 51,7 | 50,8 | 31,5 |
| 25 | M37 x 1.0 | 43,5 | 16 | 31,4 | 18,4 | 54,0 | 53,2 | 50,8 | 28,5 |

IF MAX ENTRY IS EXCEEDED, ADAPTOR ASSEMBLY IS SUPPLIED AS STYLE 2 (T2 DOES NOT FEATURE IN THE PART NUMBER) IN WHICH CASE DIMENSIONS C, D, E, F & K DO NOT APPLY AND MIN L IS L3

TABLE 2

| ENTRY SIZE | CABLE RANGE |
|---|---|
| 04 | 3,2 - 7,9 |
| 06 | 6,4 - 11,1 |
| 08 | 9,8 - 14,3 |
| 10 | 8,9 - 15,9 |
| 12 | 12,7 - 19,1 |
| 16 | 15,9 - 23,8 |
| 20 | 22,2 - 31,8 |
| 24 | 25,4 - 34,9 |
| 28 | 31,8 - 41,3 |
| 32 | 36,5 - 47,6 |

TABLE 3

| CODE | FINISH |
|---|---|
| C | ELECTROLESS NICKEL |
| B | CADMIUM OLIVE DRAB OVER ELECTROLESS NICKEL |
| ZB | ZINC COBALT OLIVE DRAB OVER ELECTROLESS NICKEL |
| ZN | ZINC NICKEL BLACK PASSIVATE OVER ELECTROLESS NICKEL |

LIST NOT EXHAUSTIVE, SEE PLATING TABLE FOR OTHER OPTIONS

36H1-17-08-1-C-CC-L3-T

- SERIES
- CONNECTOR INTERFACE
- ANGLE
- SHELL SIZE (TABLE 1)
- ENTRY SIZE (TABLE 2)
- MATERIAL
  - ALUMINIUM ALLOY
- FINISH (TABLE 3)
- CABLE CLAMP OPTION
  - OMIT FOR PLAIN NUT
- LENGTH CODE (STRAIGHT ONLY)
  - 1/2" INCREMENTS, MINIMUM L2(=1")
- GROUNDING CONE OPTION
  - D - DUAL CONE
  - T - TRIPLE CONE

**For tooling and assembly instructions see www.polamco.com**

Backshell supplied with Cone(s)
Sealing and strain relief achieved with Heat Shrink Boot for non CC versions (see page 354)
Adhesive if required for assembly (see page 352)
Screenbraid for EMC/RFI screening (see page 350)

DRAWING NOT TO SCALE, DIMENSIONS IN MM

SEE PAGES 18-26 FOR COMPLETE LIST OF AVAILABLE MATERIALS, FINISHES AND CONNECTOR INTERFACES
(DIMENSIONS, FORM AND O RING SUBJECT TO CHANGE DEPENDING ON BACKSHELL MATERIAL AND CONNECTOR INTERFACE)

THIS DRAWING IS THE PROPERTY OF POLAMCO LTD AND MUST NOT BE USED FOR COMMERCIAL PURPOSES WITHOUT WRITTEN CONSENT OF THE COMPANY

# 36F (NE) - Cone Clamp Backshell Non-Environmental

## Interface F - MIL-DTL-38999 SERIES I

Polamco

**Interconnect Solutions Worldwide**

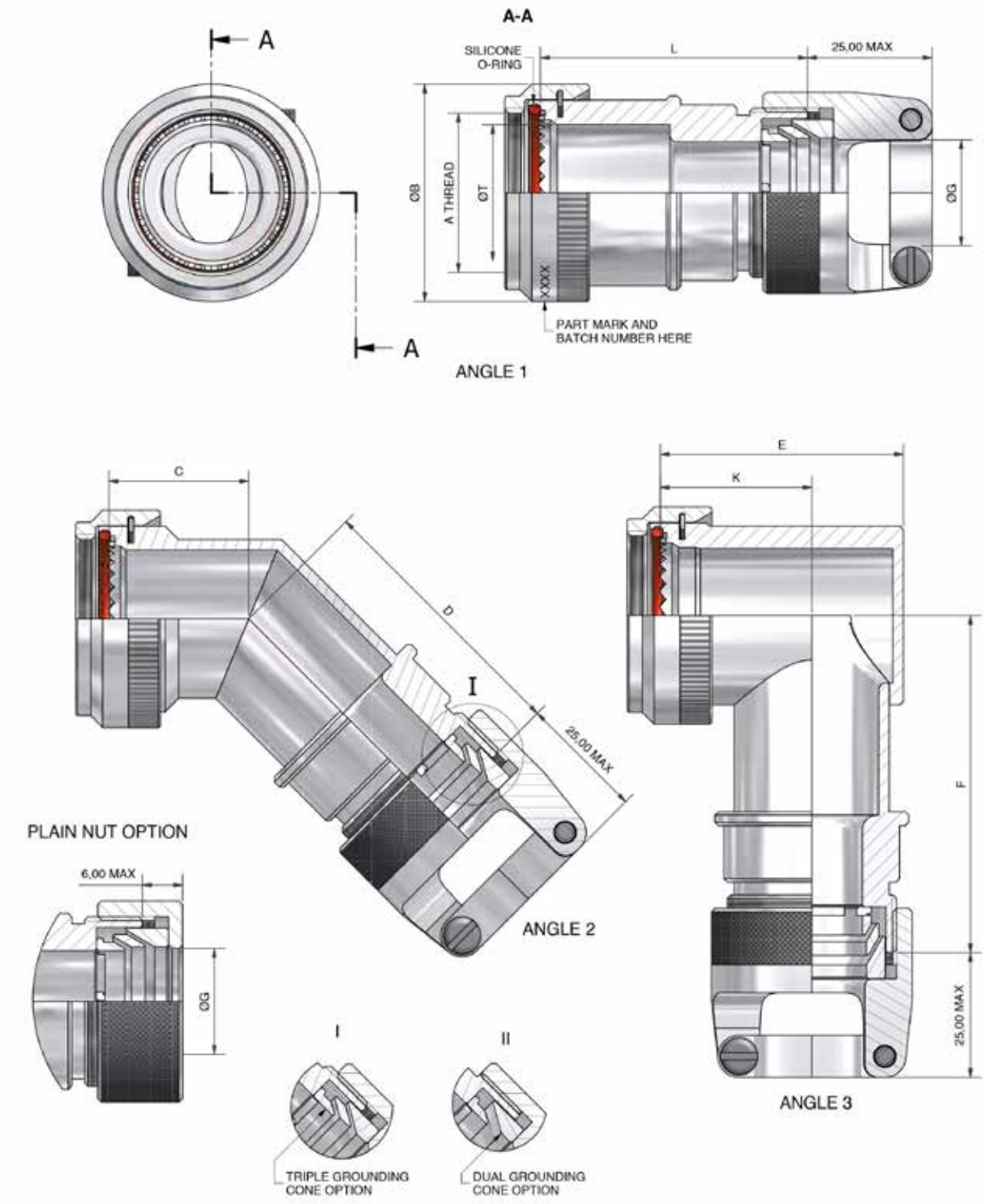


DRAWING NOT TO SCALE, DIMENSIONS IN MM

SEE PAGES 18-26 FOR COMPLETE LIST OF AVAILABLE MATERIALS, FINISHES AND CONNECTOR INTERFACES
(DIMENSIONS, FORM AND O RING SUBJECT TO CHANGE DEPENDING ON BACKSHELL MATERIAL AND CONNECTOR INTERFACE)





THIS DRAWING IS THE PROPERTY OF POLAMCO LTD AND MUST NOT BE USED FOR COMMERCIAL PURPOSES WITHOUT WRITTEN CONSENT OF THE COMPANY

# 36F (NE) - Cone Clamp Backshell Non-Environmental

## Interface F - MIL-DTL-38999 SERIES I

Polamco

**Interconnect Solutions Worldwide**

TABLE 1

| SHELL SIZE | A THREAD | ØB MAX | ØT MIN | MAX ENTRY | C ±0,5 | D MAX | E MAX | F MAX | K ±0,5 |
|---|---|---|---|---|---|---|---|---|---|
| 09 | 7/16-28UNEF | 18,0 | 6,8 | - | 16,4 | 35,8 | 22,7 | 36,1 | 15,0 |
| 11 | 9/16-24UNEF | 21,0 | 10,2 | 04 | 17,2 | 37,3 | 26,2 | 39,1 | 17,0 |
| 13 | 11/16-24UNEF | 24,5 | 13,1 | 06 | 17,6 | 38,9 | 29,2 | 39,6 | 18,0 |
| 15 | 13/16-20UNEF | 27,8 | 16,2 | 10 | 18,5 | 41,1 | 32,2 | 41,4 | 20,0 |
| 17 | 15/16-20UNEF | 30,8 | 19,3 | 12 | 19,2 | 43,9 | 35,7 | 48,0 | 21,5 |
| 19 | 1 1/16-18UNEF | 34,1 | 22,3 | 12 | 19,6 | 48,8 | 39,7 | 50,8 | 23,0 |
| 21 | 1 3/16-18UNEF | 37,3 | 25,8 | 16 | 20,4 | 50,1 | 42,2 | 50,8 | 25,0 |
| 23 | 1 5/16-18UNEF | 41,0 | 28,3 | 16 | 20,8 | 52,6 | 45,2 | 50,8 | 26,0 |
| 25 | 1 7/16-18UNEF | 43,7 | 31,5 | 16 | 21,7 | 54,0 | 48,2 | 50,8 | 28,0 |

IF MAX ENTRY IS EXCEEDED, ADAPTOR ASSEMBLY IS SUPPLIED AS STYLE T2 (T2 DOES NOT FEATURE IN THE PART NUMBER) IN WHICH CASE DIMENSIONS: C, D, E, F & K DO NOT APPLY AND MIN L IS L3.

TABLE 2

| ENTRY SIZE | ØG MIN |
|---|---|
| 04 | 7,9 |
| 06 | 11,1 |
| 08 | 14,3 |
| 10 | 15,9 |
| 12 | 19,1 |
| 16 | 23,8 |
| 20 | 31,8 |
| 24 | 34,9 |
| 28 | 41,3 |
| 32 | 47,6 |

TABLE 3

| CODE | FINISH |
|---|---|
| C | ELECTROLESS NICKEL |
| B | CADMIUM OLIVE DRAB OVER ELECTROLESS NICKEL |
| ZB | ZINC COBALT OLIVE DRAB OVER ELECTROLESS NICKEL |
| ZN | ZINC NICKEL BLACK PASSIVATE OVER ELECTROLESS NICKEL |

LIST NOT EXHAUSTIVE, SEE PLATING TABLE FOR OTHER OPTIONS

36F1-17-08-1-C-NE-CC-L3-T

- SERIES
- CONNECTOR INTERFACE
- ANGLE
- SHELL SIZE (TABLE 1)
- ENTRY SIZE (TABLE 2)
- MATERIAL
  - ALUMINIUM ALLOY
- FINISH (TABLE 3)
- NON ENVIRONMENTAL OPTION
- CABLE CLAMP OPTION
  - OMIT FOR PLAIN NUT
- LENGTH CODE (STRAIGHT ONLY)
  - (1/2" INCREMENTS, MINIMUM L2 = 1")
- GROUNDING CONE OPTION
  - D - DUAL CONE
  - T - TRIPLE CONE



**For tooling and assembly instructions see www.polamco.com**

Backshell supplied with Cone(s)
Sealing and strain relief achieved with Heat Shrink Boot for non CC versions (see page 354)
Adhesive if required for assembly (see page 352)
Screenbraid for EMC/RFI screening (see page 350)

DRAWING NOT TO SCALE, DIMENSIONS IN MM

SEE PAGES 18-26 FOR COMPLETE LIST OF AVAILABLE MATERIALS, FINISHES AND CONNECTOR INTERFACES
(DIMENSIONS, FORM AND O RING SUBJECT TO CHANGE DEPENDING ON BACKSHELL MATERIAL AND CONNECTOR INTERFACE)

THIS DRAWING IS THE PROPERTY OF POLAMCO LTD AND MUST NOT BE USED FOR COMMERCIAL PURPOSES WITHOUT WRITTEN CONSENT OF THE COMPANY

# 36F (NE) - Cone Clamp Backshell Non-Environmental

## Interface F - MIL-DTL-38999 SERIES II

Polamco

**Interconnect Solutions Worldwide**

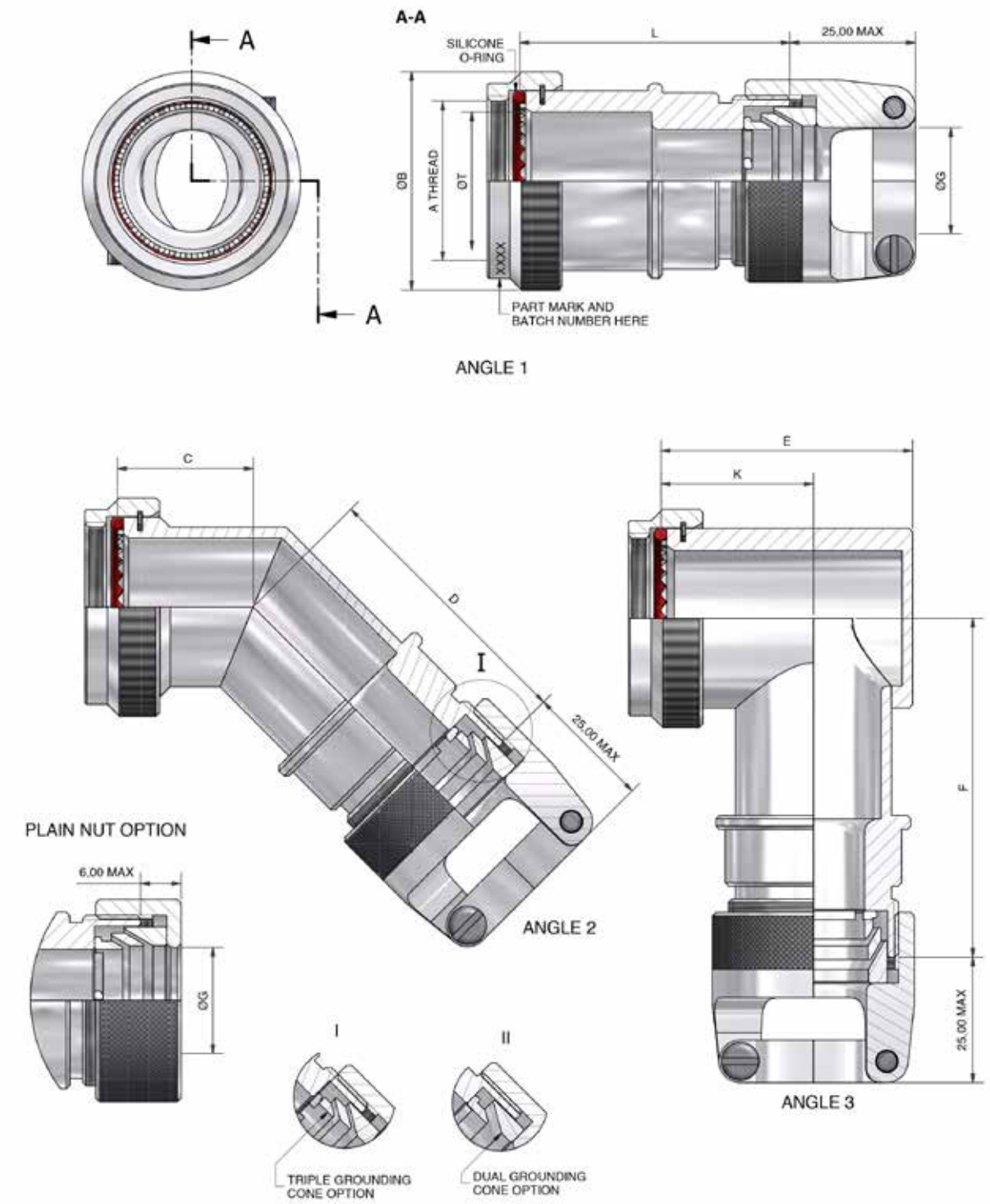


DRAWING NOT TO SCALE, DIMENSIONS IN MM

SEE PAGES 18-26 FOR COMPLETE LIST OF AVAILABLE MATERIALS, FINISHES AND CONNECTOR INTERFACES
(DIMENSIONS, FORM AND O RING SUBJECT TO CHANGE DEPENDING ON BACKSHELL MATERIAL AND CONNECTOR INTERFACE)





THIS DRAWING IS THE PROPERTY OF POLAMCO LTD AND MUST NOT BE USED FOR COMMERCIAL PURPOSES WITHOUT WRITTEN CONSENT OF THE COMPANY

# 36F (NE) - Cone Clamp Backshell Non-Environmental

## Interface F - MIL-DTL-38999 SERIES II

Polamco

**Interconnect Solutions Worldwide**

TABLE 1

| SHELL SIZE | A THREAD | ØB MAX | ØT MIN | MAX ENTRY | C ±0,5 | D MAX | E MAX | F MAX | K ±0,5 |
|---|---|---|---|---|---|---|---|---|---|
| 08 | 7/16-28UNEF | 18,3 | 6,6 | - | 16,4 | 35,8 | 22,7 | 36,1 | 15,0 |
| 10 | 9/16-24UNEF | 21,5 | 10,1 | 04 | 17,2 | 37,3 | 26,2 | 39,1 | 17,0 |
| 12 | 11/16-24UNEF | 24,5 | 12,9 | 06 | 17,6 | 38,9 | 29,2 | 39,6 | 18,0 |
| 14 | 13/16-20UNEF | 27,8 | 16,1 | 10 | 18,5 | 41,1 | 32,2 | 41,4 | 20,0 |
| 16 | 15/16-20UNEF | 30,8 | 19,3 | 12 | 19,2 | 43,9 | 35,7 | 48,0 | 21,5 |
| 18 | 1 1/16-18UNEF | 34,1 | 21,7 | 12 | 19,6 | 48,8 | 39,7 | 50,8 | 23,0 |
| 20 | 1 3/16-18UNEF | 37,3 | 24,9 | 16 | 20,4 | 50,1 | 42,2 | 50,8 | 25,0 |
| 22 | 1 5/16-18UNEF | 40,5 | 28,1 | 16 | 20,8 | 52,6 | 45,2 | 50,8 | 26,0 |
| 24 | 1 7/16-18UNEF | 43,7 | 31,3 | 16 | 21,7 | 54,0 | 48,2 | 50,8 | 28,0 |

IF MAX ENTRY IS EXCEEDED, ADAPTOR ASSEMBLY IS SUPPLIED AS STYLE T2 (T2 DOES NOT FEATURE IN THE PART NUMBER) IN WHICH CASE SIMENSIONS: C, D, E, F & K DO NOT APPLY AND MIN L IS L3.

TABLE 2

| ENTRY SIZE | ØG MIN |
|---|---|
| 04 | 7,9 |
| 06 | 11,1 |
| 08 | 14,3 |
| 10 | 15,9 |
| 12 | 19,1 |
| 16 | 23,8 |
| 20 | 31,8 |
| 24 | 34,9 |
| 28 | 41,3 |
| 32 | 47,6 |

TABLE 3

| CODE | FINISH |
|---|---|
| C | ELECTROLESS NICKEL |
| B | CADMIUM OLIVE DRAB OVER ELECTROLESS NICKEL |
| ZB | ZINC COBALT OLIVE DRAB OVER ELECTROLESS NICKEL |
| ZN | ZINC NICKEL BLACK PASSIVATE OVER ELECTROLESS NICKEL |

LIST NOT EXHAUSTIVE, SEE PLATING TABLE FOR OTHER OPTIONS

36F1-16-08-1-C-NE-CC-L3-T

- SERIES
- CONNECTOR INTERFACE
- ANGLE
- SHELL SIZE (TABLE 1)
- ENTRY SIZE (TABLE 2)
- MATERIAL
  - ALUMINIUM ALLOY
- FINISH (TABLE 3)
- NON ENVIRONMENTAL OPTION
- CABLE CLAMP OPTION
  - OMIT FOR PLAIN NUT
- LENGTH CODE (STRAIGHT ONLY)
  - (1/2" INCREMENTS, MINIMUM L2 = 1")
- GROUNDING CONE OPTION
  - D - DUAL CONE
  - T - TRIPLE CONE

CONE TERMINATION

**For tooling and assembly instructions see www.polamco.com**

Backshell supplied with Cone(s)
Sealing and strain relief achieved with Heat Shrink Boot for non CC versions (see page 354)
Adhesive if required for assembly (see page 352)
Screenbraid for EMC/RFI screening (see page 350)

DRAWING NOT TO SCALE, DIMENSIONS IN MM

SEE PAGES 18-26 FOR COMPLETE LIST OF AVAILABLE MATERIALS, FINISHES AND CONNECTOR INTERFACES
(DIMENSIONS, FORM AND O RING SUBJECT TO CHANGE DEPENDING ON BACKSHELL MATERIAL AND CONNECTOR INTERFACE)

THIS DRAWING IS THE PROPERTY OF POLAMCO LTD AND MUST NOT BE USED FOR COMMERCIAL PURPOSES WITHOUT WRITTEN CONSENT OF THE COMPANY

# 36H (NE) - Cone Clamp Backshell Non-Environmental

## Interface H - MIL-DTL-38999 SERIES III & IV

Polamco

**Interconnect Solutions Worldwide**

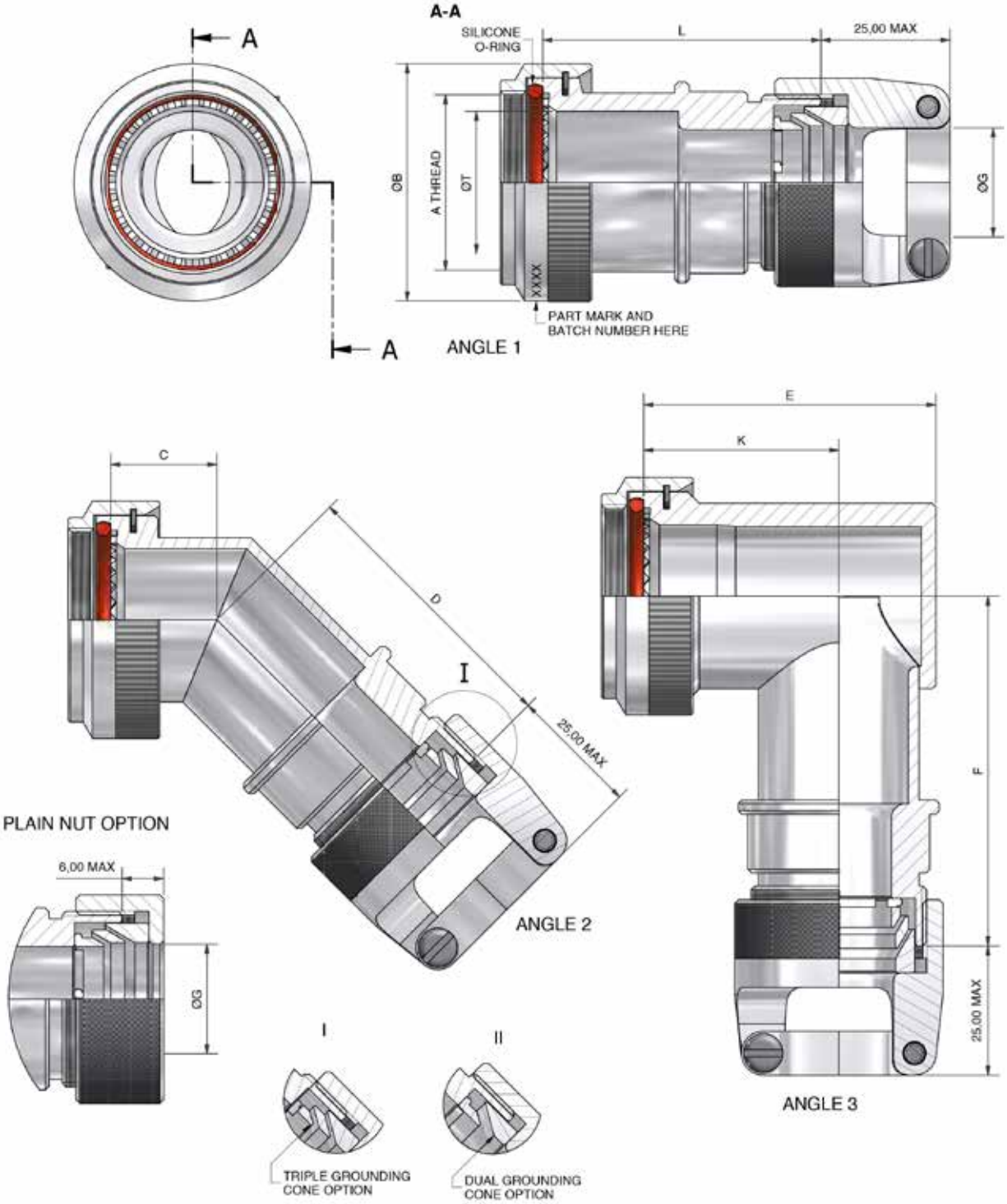


DRAWING NOT TO SCALE, DIMENSIONS IN MM

SEE PAGES 18-26 FOR COMPLETE LIST OF AVAILABLE MATERIALS, FINISHES AND CONNECTOR INTERFACES
(DIMENSIONS, FORM AND O RING SUBJECT TO CHANGE DEPENDING ON BACKSHELL MATERIAL AND CONNECTOR INTERFACE)





THIS DRAWING IS THE PROPERTY OF POLAMCO LTD AND MUST NOT BE USED FOR COMMERCIAL PURPOSES WITHOUT WRITTEN CONSENT OF THE COMPANY

# 36H (NE) - Cone Clamp Backshell Non-Environmental

## Interface H - MIL-DTL-38999 SERIES III & IV

Polamco

**Interconnect Solutions Worldwide**

TABLE 1

| SHELL SIZE | A THREAD | ØB MAX | ØT MIN | MAX ENTRY | C ±0,5 | D MAX | E MAX | F MAX | K ±0,5 |
|---|---|---|---|---|---|---|---|---|---|
| 09 | M12x1.0 | 18,0 | 6,7 | - | 13,1 | 35,8 | 25,7 | 36,1 | 17,5 |
| 11 | M15x1.0 | 21,0 | 10,2 | 04 | 13,9 | 37,3 | 26,7 | 39,1 | 17,5 |
| 13 | M18x1.0 | 24,5 | 13,5 | 06 | 14,5 | 38,9 | 31,2 | 39,6 | 20,0 |
| 15 | M22x1.0 | 29,0 | 16,2 | 10 | 15,5 | 41,1 | 37,2 | 41,4 | 24,5 |
| 17 | M25x1.0 | 32,5 | 19,4 | 12 | 16,1 | 43,9 | 40,2 | 48,0 | 26,7 |
| 19 | M28x1.0 | 35,5 | 21,8 | 12 | 16,8 | 48,8 | 44,7 | 50,8 | 27,0 |
| 21 | M31x1.0 | 37,0 | 25,1 | 16 | 17,1 | 50,1 | 49,2 | 50,8 | 30,5 |
| 23 | M34x1.0 | 40,0 | 28,2 | 16 | 17,7 | 52,6 | 51,7 | 50,8 | 31,5 |
| 25 | M37x1.0 | 43,5 | 31,4 | 16 | 18,4 | 54,0 | 53,2 | 50,8 | 28,5 |

IF MAX ENTRY IS EXCEEDED, ADAPTOR ASSEMBLY IS SUPPLIED AS STYLE T2 (T2 DOES NOT FEATURE IN THE PART NUMBER) IN WHICH CASE DIMENSIONS: C, D, E, F & K DO NOT APPLY AND MIN L IS L3.

TABLE 2

| ENTRY SIZE | ØG MIN |
|---|---|
| 04 | 7,9 |
| 06 | 11,1 |
| 08 | 14,3 |
| 10 | 15,9 |
| 12 | 19,1 |
| 16 | 23,8 |
| 20 | 31,8 |
| 24 | 34,9 |
| 28 | 41,3 |
| 32 | 47,6 |

TABLE 3

| CODE | FINISH |
|---|---|
| C | ELECTROLESS NICKEL |
| B | CADMIUM OLIVE DRAB OVER ELECTROLESS NICKEL |
| ZB | ZINC COBALT OLIVE DRAB OVER ELECTROLESS NICKEL |
| ZN | ZINC NICKEL BLACK PASSIVATE OVER ELECTROLESS NICKEL |

LIST NOT EXHAUSTIVE, SEE PLATING TABLE FOR OTHER OPTIONS

36H1-17-08-1-C-NE-CC-L3-T

- SERIES
- CONNECTOR INTERFACE
- ANGLE
- SHELL SIZE (TABLE 1)
- ENTRY SIZE (TABLE 2)
- MATERIAL
  - ALUMINIUM ALLOY
- FINISH (TABLE 3)
- NON ENVIRONMENTAL OPTION
- CABLE CLAMP OPTION
  - OMIT FOR PLAIN NUT
- LENGTH CODE (STRAIGHT ONLY)
  - (1/2" INCREMENTS, MINIMUM L2 = 1")
- GROUNDING CONE OPTION
  - D - DUAL CONE
  - T - TRIPLE CONE

**For tooling and assembly instructions see www.polamco.com**

Backshell supplied with Cone(s)
Sealing and strain relief achieved with Heat Shrink Boot for non CC versions (see page 354)
Adhesive if required for assembly (see page 352)
Screenbraid for EMC/RFI screening (see page 350)

DRAWING NOT TO SCALE, DIMENSIONS IN MM

SEE PAGES 18-26 FOR COMPLETE LIST OF AVAILABLE MATERIALS, FINISHES AND CONNECTOR INTERFACES
(DIMENSIONS, FORM AND O RING SUBJECT TO CHANGE DEPENDING ON BACKSHELL MATERIAL AND CONNECTOR INTERFACE)



THIS DRAWING IS THE PROPERTY OF POLAMCO LTD AND MUST NOT BE USED FOR COMMERCIAL PURPOSES WITHOUT WRITTEN CONSENT OF THE COMPANY

# 39F - Cone Clamp Cable Sealing Backshell

## Interface F - MIL-DTL-38999 SERIES I

Polamco

**Interconnect Solutions Worldwide**

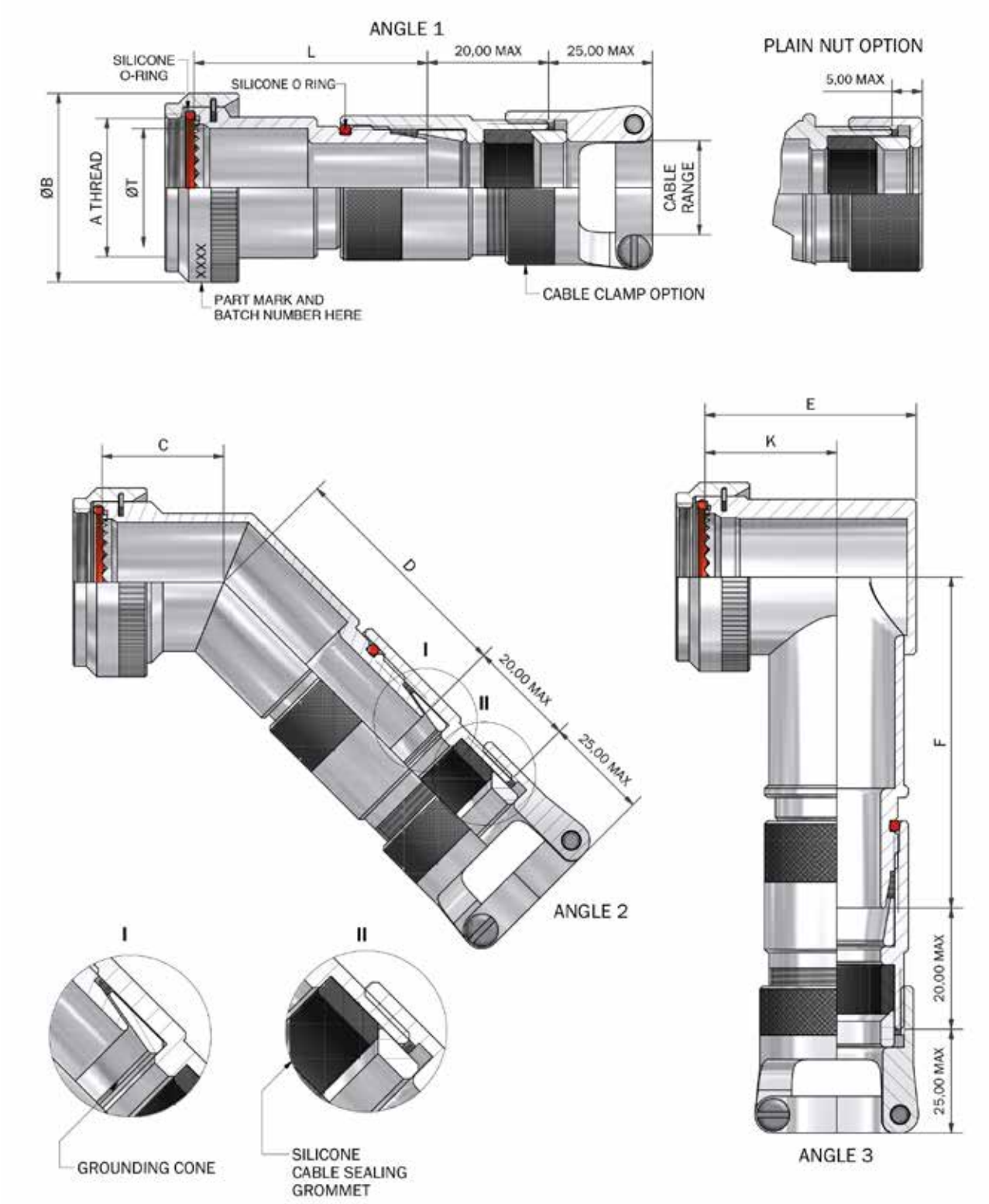


DRAWING NOT TO SCALE, DIMENSIONS IN MM

SEE PAGES 18-26 FOR COMPLETE LIST OF AVAILABLE MATERIALS, FINISHES AND CONNECTOR INTERFACES
(DIMENSIONS, FORM AND O RING SUBJECT TO CHANGE DEPENDING ON BACKSHELL MATERIAL AND CONNECTOR INTERFACE)





THIS DRAWING IS THE PROPERTY OF POLAMCO LTD AND MUST NOT BE USED FOR COMMERCIAL PURPOSES WITHOUT WRITTEN CONSENT OF THE COMPANY

# 39F - Cone Clamp Cable Sealing Backshell

## Interface F - MIL-DTL-38999 SERIES I

Polamco

**Interconnect Solutions Worldwide**

TABLE 1

| SHELL SIZE | A THREAD | ØB MAX | ØT MIN | MAX ENTRY | C ±0,5 | D MAX | E MAX | F MAX | K ±0,5 |
|---|---|---|---|---|---|---|---|---|---|
| 09 | 7/16-28 UNEF | 18,0 | 6,8 | - | 16,4 | 30,5 | 22,7 | 39,2 | 15,0 |
| 11 | 9/16-24 UNEF | 21,0 | 10,2 | 04 | 17,2 | 30,5 | 26,2 | 42,3 | 17,0 |
| 13 | 11/16-24 UNEF | 24,5 | 13,1 | 06 | 17,6 | 32,5 | 29,2 | 42,8 | 18,0 |
| 15 | 13/16-20 UNEF | 27,8 | 16,2 | 10 | 18,5 | 40,3 | 32,2 | 50,5 | 20,0 |
| 17 | 15/16-20 UNEF | 30,8 | 19,3 | 12 | 19,2 | 43,1 | 35,7 | 52,8 | 21,5 |
| 19 | 1 1/16-18 UNEF | 34,1 | 22,3 | 12 | 19,6 | 47,9 | 39,7 | 57,1 | 23,0 |
| 21 | 1 3/16-18 UNEF | 37,3 | 25,8 | 16 | 20,4 | 47,9 | 42,2 | 57,1 | 25,0 |
| 23 | 1 5/16-18 UNEF | 41,0 | 28,3 | 16 | 20,8 | 56,5 | 45,2 | 64,7 | 26,0 |
| 25 | 1 7/16-18 UNEF | 43,7 | 31,5 | 16 | 21,7 | 56,5 | 48,2 | 64,7 | 28,0 |

IF MAX ENTRY IS EXCEEDED, ADAPTOR ASSEMBLY IS SUPPLIED AS STYLE 2 (T2 DOES NOT FEATURE IN THE PART NUMBER) IN WHICH CASE DIMENSIONS C, D, E, F & K DO NOT APPLY AND MIN L IS L3

TABLE 2

| ENTRY SIZE | CABLE RANGE |
|---|---|
| 04 | 3,2 - 7,9 |
| 06 | 6,4 - 11,1 |
| 08 | 9,8 - 14,3 |
| 10 | 8,9 - 15,9 |
| 12 | 12,7 - 19,1 |
| 16 | 15,9 - 23,8 |
| 20 | 22,2 - 31,8 |
| 24 | 25,4 - 34,9 |
| 28 | 31,8 - 41,3 |
| 32 | 36,5 - 47,6 |

TABLE 3

| CODE | FINISH |
|---|---|
| C | ELECTROLESS NICKEL |
| B | CADMIUM OLIVE DRAB OVER ELECTROLESS NICKEL |
| ZB | ZINC COBALT OLIVE DRAB OVER ELECTROLESS NICKEL |
| ZN | ZINC NICKEL BLACK PASSIVATE OVER ELECTROLESS NICKEL |

LIST NOT EXHAUSTIVE, SEE PLATING TABLE FOR OTHER OPTIONS

39F1-17-08-1-C-CC-L3

- SERIES
- CONNECTOR INTERFACE
- ANGLE
- SHELL SIZE (TABLE 1)
- ENTRY SIZE (TABLE 2)
- MATERIAL
  - ALUMINIUM ALLOY
- FINISH (TABLE 3)
- CABLE CLAMP OPTION
  - OMIT FOR PLAIN NUT
- LENGTH CODE (STRAIGHT ONLY)
  - 1/2" INCREMENTS, MINIMUM L2(=1")

**For tooling and assembly instructions see www.polamco.com**

Backshell supplied with Cone(s)
Sealing and strain relief achieved with Heat Shrink Boot for non CC versions (see page 354)
Adhesive if required for assembly (see page 352)
Screenbraid for EMC/RFI screening (see page 350)

DRAWING NOT TO SCALE, DIMENSIONS IN MM

SEE PAGES 18-26 FOR COMPLETE LIST OF AVAILABLE MATERIALS, FINISHES AND CONNECTOR INTERFACES
(DIMENSIONS, FORM AND O RING SUBJECT TO CHANGE DEPENDING ON BACKSHELL MATERIAL AND CONNECTOR INTERFACE)

THIS DRAWING IS THE PROPERTY OF POLAMCO LTD AND MUST NOT BE USED FOR COMMERCIAL PURPOSES WITHOUT WRITTEN CONSENT OF THE COMPANY

# 39F - Cone Clamp Cable Sealing Backshell

## Interface F - MIL-DTL-38999 SERIES II

Polamco

**Interconnect Solutions Worldwide**

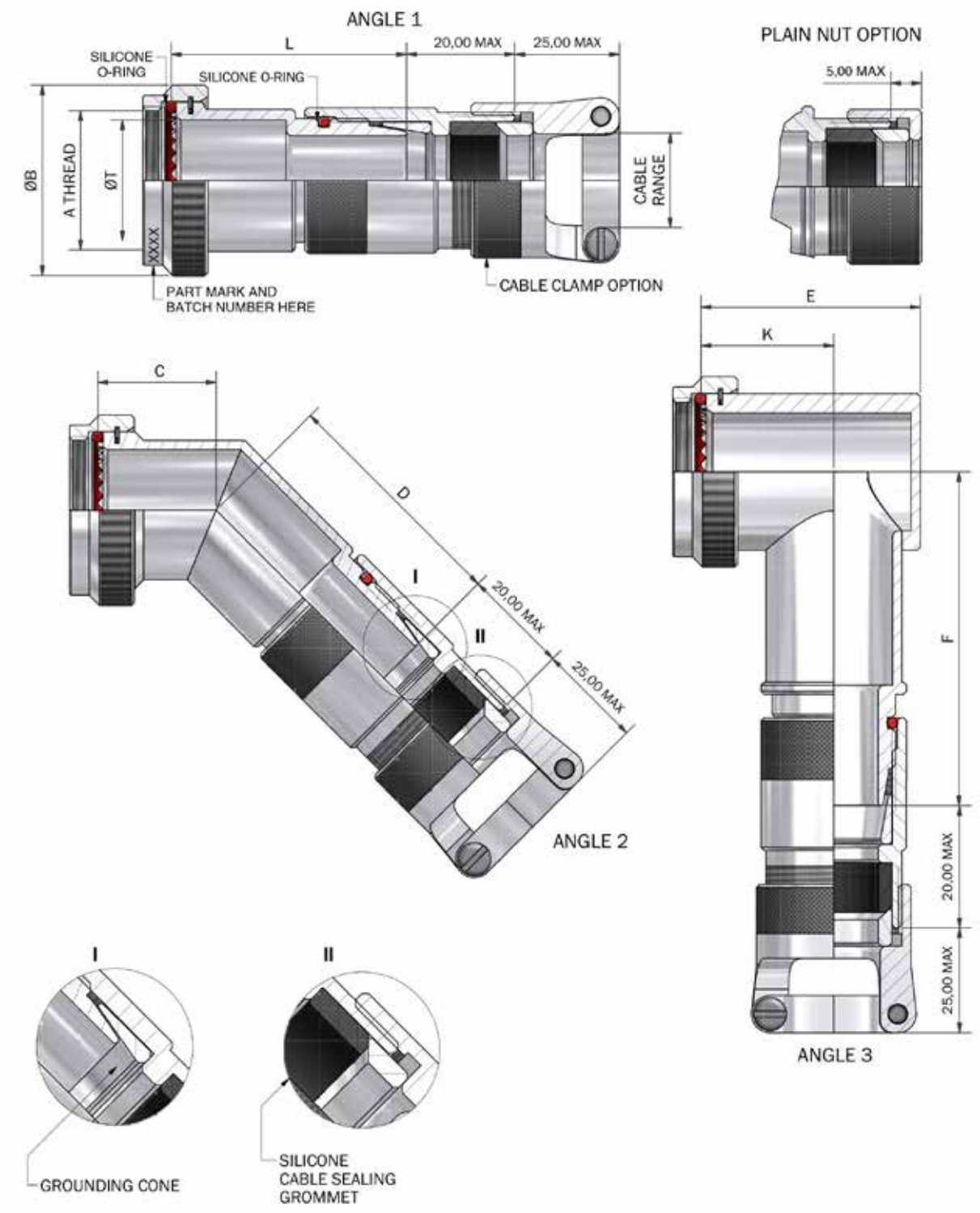


DRAWING NOT TO SCALE, DIMENSIONS IN MM

SEE PAGES 18-26 FOR COMPLETE LIST OF AVAILABLE MATERIALS, FINISHES AND CONNECTOR INTERFACES
(DIMENSIONS, FORM AND O RING SUBJECT TO CHANGE DEPENDING ON BACKSHELL MATERIAL AND CONNECTOR INTERFACE)





THIS DRAWING IS THE PROPERTY OF POLAMCO LTD AND MUST NOT BE USED FOR COMMERCIAL PURPOSES WITHOUT WRITTEN CONSENT OF THE COMPANY

# 39F - Cone Clamp Cable Sealing Backshell

## Interface F - MIL-DTL-38999 SERIES II

Polamco

**Interconnect Solutions Worldwide**

TABLE 1

| SHELL SIZE | A THREAD | ØB MAX | ØT MIN | MAX ENTRY | C ±0,5 | D MAX | E MAX | F MAX | K ±0,5 |
|---|---|---|---|---|---|---|---|---|---|
| 08 | 7/16-28 UNEF | 18,3 | 6,6 | - | 16,4 | 30,5 | 22,7 | 39,2 | 15,0 |
| 10 | 9/16-24 UNEF | 21,5 | 10,1 | 04 | 17,2 | 30,5 | 26,2 | 42,3 | 17,0 |
| 12 | 11/16-24 UNEF | 24,5 | 12,9 | 06 | 17,6 | 32,5 | 29,2 | 42,8 | 18,0 |
| 14 | 13/16-20 UNEF | 27,8 | 16,1 | 10 | 18,5 | 40,3 | 32,2 | 50,5 | 20,0 |
| 16 | 15/16-20 UNEF | 30,8 | 19,3 | 12 | 19,2 | 43,1 | 35,7 | 52,8 | 21,5 |
| 18 | 1 1/16-18 UNEF | 34,1 | 21,7 | 12 | 19,6 | 47,9 | 39,7 | 57,1 | 23,0 |
| 20 | 1 3/16-18 UNEF | 37,3 | 24,9 | 16 | 20,4 | 47,9 | 42,2 | 57,1 | 25,0 |
| 22 | 1 5/16-18 UNEF | 40,5 | 28,1 | 16 | 20,8 | 56,5 | 45,2 | 64,7 | 26,0 |
| 24 | 1 7/16-18 UNEF | 43,7 | 31,3 | 16 | 21,7 | 56,5 | 48,2 | 64,7 | 28,0 |

IF MAX ENTRY IS EXCEEDED, ADAPTOR ASSEMBLY IS SUPPLIED AS STYLE 2 (T2 DOES NOT FEATURE IN THE PART NUMBER) IN WHICH CASE DIMENSIONS C, D, E, F & K DO NOT APPLY AND MIN L IS L3

TABLE 2

| ENTRY SIZE | CABLE RANGE |
|---|---|
| 04 | 3,2 - 7,9 |
| 06 | 6,4 - 11,1 |
| 08 | 9,8 - 14,3 |
| 08X | 7,9 - 14,3 |
| 10 | 8,9 - 15,9 |
| 12 | 12,7 - 19,1 |
| 16 | 15,9 - 23,8 |
| 20 | 22,2 - 31,8 |
| 24 | 25,4 - 34,9 |
| 28 | 31,8 - 41,3 |
| 32 | 36,5 - 47,6 |

TABLE 3

| CODE | FINISH |
|---|---|
| C | ELECTROLESS NICKEL |
| B | CADMIUM OLIVE DRAB OVER ELECTROLESS NICKEL |
| ZB | ZINC COBALT OLIVE DRAB OVER ELECTROLESS NICKEL |
| ZN | ZINC NICKEL BLACK PASSIVATE OVER ELECTROLESS NICKEL |

LIST NOT EXHAUSTIVE, SEE PLATING TABLE FOR OTHER OPTIONS

39F1-16-08-1-C-CC-L3

- SERIES
- CONNECTOR INTERFACE
- ANGLE
- SHELL SIZE (TABLE 1)
- ENTRY SIZE (TABLE 2)
- MATERIAL
  - ALUMINIUM ALLOY
- FINISH (TABLE 3)
- CABLE CLAMP OPTION
  - OMIT FOR PLAIN NUT
- LENGTH CODE (STRAIGHT ONLY)
  - 1/2" INCREMENTS, MINIMUM L2(=1")

**For tooling and assembly instructions see www.polamco.com**

Backshell supplied with Cone(s)
Sealing and strain relief achieved with Heat Shrink Boot for non CC versions (see page 354)
Adhesive if required for assembly (see page 352)
Screenbraid for EMC/RFI screening (see page 350)

DRAWING NOT TO SCALE, DIMENSIONS IN MM

SEE PAGES 18-26 FOR COMPLETE LIST OF AVAILABLE MATERIALS, FINISHES AND CONNECTOR INTERFACES
(DIMENSIONS, FORM AND O RING SUBJECT TO CHANGE DEPENDING ON BACKSHELL MATERIAL AND CONNECTOR INTERFACE)

THIS DRAWING IS THE PROPERTY OF POLAMCO LTD AND MUST NOT BE USED FOR COMMERCIAL PURPOSES WITHOUT WRITTEN CONSENT OF THE COMPANY

# 39H - Cone Clamp Cable Sealing Backshell

## Interface H - MIL-DTL-38999 SERIES III & IV

Polamco

**Interconnect Solutions Worldwide**

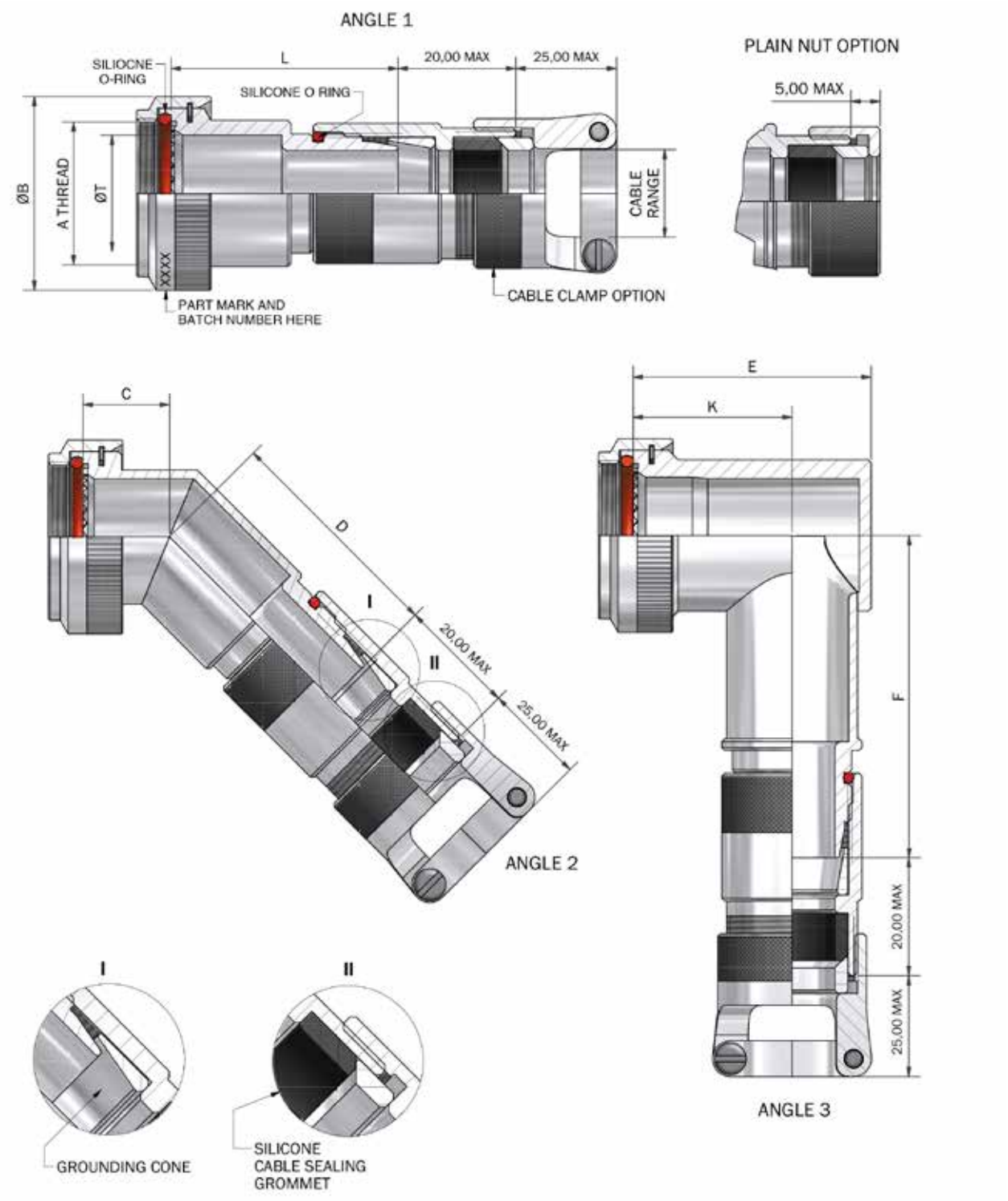


DRAWING NOT TO SCALE, DIMENSIONS IN MM

SEE PAGES 18-26 FOR COMPLETE LIST OF AVAILABLE MATERIALS, FINISHES AND CONNECTOR INTERFACES
(DIMENSIONS, FORM AND O RING SUBJECT TO CHANGE DEPENDING ON BACKSHELL MATERIAL AND CONNECTOR INTERFACE)





THIS DRAWING IS THE PROPERTY OF POLAMCO LTD AND MUST NOT BE USED FOR COMMERCIAL PURPOSES WITHOUT WRITTEN CONSENT OF THE COMPANY

# 39H - Cone Clamp Cable Sealing Backshell

## Interface H - MIL-DTL-38999 SERIES III & IV

Polamco

**Interconnect Solutions Worldwide**

TABLE 1

| SHELL SIZE | A THREAD | ØB MAX | ØT MIN | MAX ENTRY | C MAX | D MAX | E MAX | F MAX | K ±0,5 |
|---|---|---|---|---|---|---|---|---|---|
| 09 | M12 x 1.0 | 18,0 | 6,7 | - | 13,1 | 30,5 | 25,7 | 39,2 | 17,5 |
| 11 | M15 x 1.0 | 21,0 | 10,2 | 04 | 13,9 | 30,5 | 26,7 | 42,3 | 17,5 |
| 13 | M18 x 1.0 | 24,5 | 13,5 | 06 | 14,5 | 32,5 | 31,2 | 42,8 | 20,0 |
| 15 | M22 x 1.0 | 29,0 | 16,2 | 10 | 15,5 | 40,3 | 37,2 | 50,5 | 24,5 |
| 17 | M25 x 1.0 | 32,5 | 19,4 | 12 | 16,1 | 43,1 | 40,2 | 52,8 | 26,7 |
| 19 | M28 x 1.0 | 35,5 | 21,8 | 12 | 16,8 | 47,9 | 44,7 | 57,1 | 27,0 |
| 21 | M31 x 1.0 | 37,0 | 25,1 | 16 | 17,1 | 47,9 | 49,2 | 57,1 | 30,5 |
| 23 | M34 x 1.0 | 40,0 | 28,2 | 16 | 17,7 | 56,5 | 51,7 | 64,7 | 31,5 |
| 25 | M37 x 1.0 | 43,5 | 31,4 | 16 | 18,4 | 56,5 | 53,2 | 64,7 | 28,5 |

IF MAX ENTRY IS EXCEEDED, ADAPTOR ASSEMBLY IS SUPPLIED AS STYLE 2 (T2 DOES NOT FEATURE IN THE PART NUMBER) IN WHICH CASE DIMENSIONS C, D, E, F & K DO NOT APPLY AND MIN L IS L3

TABLE 2

| ENTRY SIZE | CABLE RANGE |
|---|---|
| 04 | 3,2 - 7,9 |
| 06 | 6,4 - 11,1 |
| 08 | 9,8 - 14,3 |
| 08X | 7,9 - 14,3 |
| 10 | 8,9 - 15,9 |
| 12 | 12,7 - 19,1 |
| 16 | 15,9 - 23,8 |
| 20 | 22,2 - 31,8 |
| 24 | 25,4 - 34,9 |
| 28 | 31,8 - 41,3 |
| 32 | 36,5 - 47,6 |

TWO GROMMETS SUPPLIED WITH ENTRY SIZES 08X AND 10 TO COVER FULL SEALING RANGE

TABLE 3

| CODE | FINISH |
|---|---|
| C | ELECTROLESS NICKEL |
| B | CADMIUM OLIVE DRAB OVER ELECTROLESS NICKEL |
| ZB | ZINC COBALT OLIVE DRAB OVER ELECTROLESS NICKEL |
| ZN | ZINC NICKEL BLACK PASSIVATE OVER ELECTROLESS NICKEL |

LIST NOT EXHAUSTIVE, SEE PLATING TABLE FOR OTHER OPTIONS

39H1-17-08-1-C-CC-L3

- SERIES
- CONECTOR INTERFACE
- ANGLE
- SHELL SIZE (TABLE 1)
- ENTRY SIZE (TABLE 2)
- MATERIAL
  - ALUMINIUM ALLOY
- FINISH (TABLE 3)
- CABLE CLAMP OPTION
  - OMIT FOR PLAIN NUT
- LENGTH CODE (STRAIGHT ONLY)
  - 1/2" INCREMENTS, MINIMUM L2(=1")

**For tooling and assembly instructions see www.polamco.com**

Backshell supplied with Cone(s)
Sealing and strain relief achieved with Heat Shrink Boot for non CC versions (see page 354)
Adhesive if required for assembly (see page 352)
Screenbraid for EMC/RFI screening (see page 350)

DRAWING NOT TO SCALE, DIMENSIONS IN MM

SEE PAGES 18-26 FOR COMPLETE LIST OF AVAILABLE MATERIALS, FINISHES AND CONNECTOR INTERFACES
(DIMENSIONS, FORM AND O RING SUBJECT TO CHANGE DEPENDING ON BACKSHELL MATERIAL AND CONNECTOR INTERFACE)

THIS DRAWING IS THE PROPERTY OF POLAMCO LTD AND MUST NOT BE USED FOR COMMERCIAL PURPOSES WITHOUT WRITTEN CONSENT OF THE COMPANY

# 39F (NE) - Cone Clamp Backshell Non-Environmental

## Interface F - MIL-DTL-38999 SERIES I

Polamco

**Interconnect Solutions Worldwide**

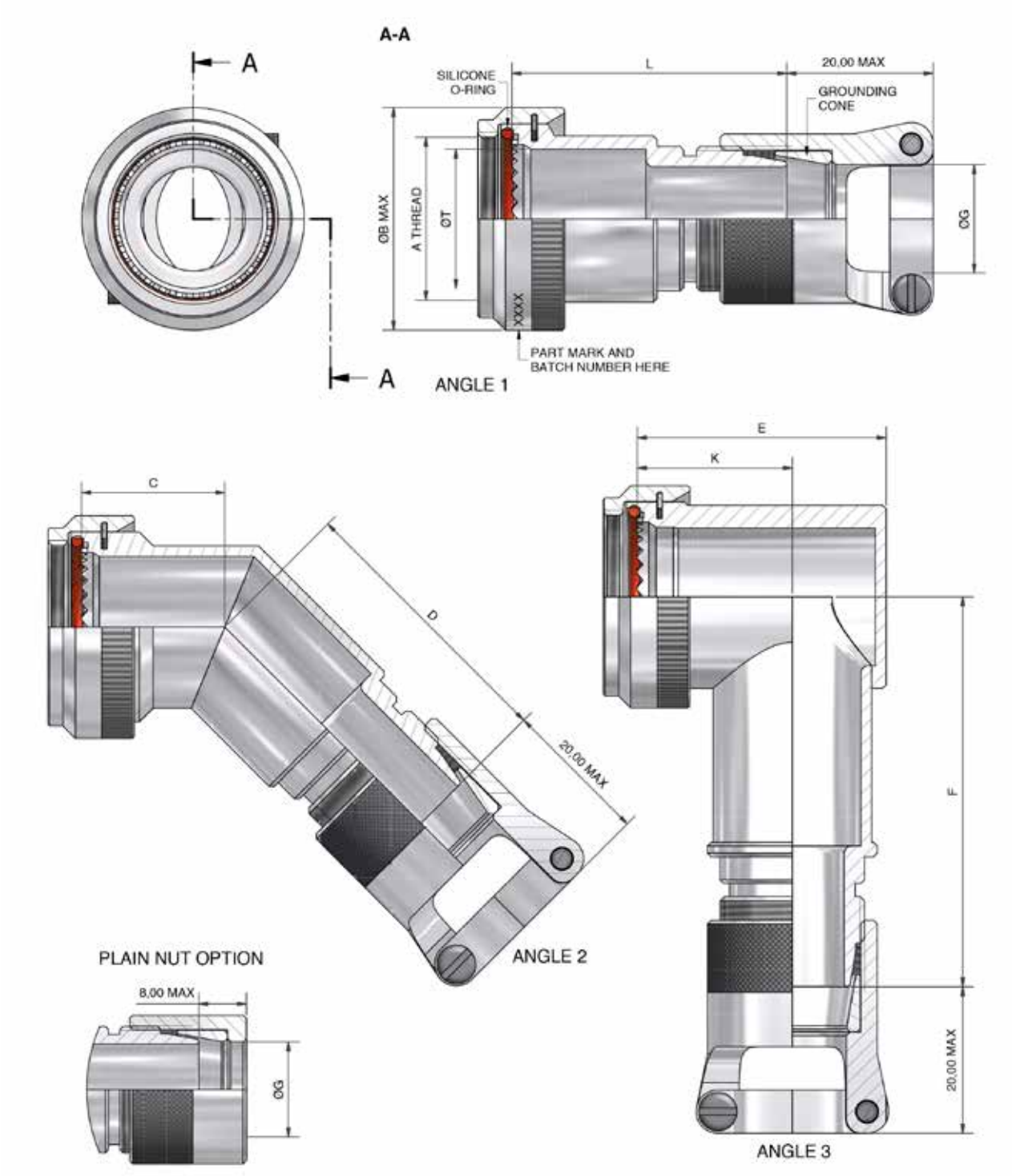


DRAWING NOT TO SCALE, DIMENSIONS IN MM

SEE PAGES 18-26 FOR COMPLETE LIST OF AVAILABLE MATERIALS, FINISHES AND CONNECTOR INTERFACES
(DIMENSIONS, FORM AND O RING SUBJECT TO CHANGE DEPENDING ON BACKSHELL MATERIAL AND CONNECTOR INTERFACE)





THIS DRAWING IS THE PROPERTY OF POLAMCO LTD AND MUST NOT BE USED FOR COMMERCIAL PURPOSES WITHOUT WRITTEN CONSENT OF THE COMPANY

# 39F (NE) - Cone Clamp Backshell Non-Environmental

## Interface F - MIL-DTL-38999 SERIES I

Polamco

**Interconnect Solutions Worldwide**

TABLE 1

| SHELL SIZE | A THREAD | ØB MAX | ØT MIN | MAX ENTRY | C ±0,5 | D MAX | E MAX | F MAX | K ±0,5 |
|---|---|---|---|---|---|---|---|---|---|
| 09 | 7/16-28UNEF | 18,0 | 6,8 | - | 16,4 | 30,5 | 22,7 | 39,2 | 15,0 |
| 11 | 9/16-24UNEF | 21,0 | 10,2 | 04 | 17,2 | 30,5 | 26,2 | 42,3 | 17,0 |
| 13 | 11/16-24UNEF | 24,5 | 13,1 | 06 | 17,6 | 32,5 | 29,2 | 42,8 | 18,0 |
| 15 | 13/16-20UNEF | 27,8 | 16,2 | 10 | 18,5 | 40,3 | 32,2 | 50,5 | 20,0 |
| 17 | 15/16-20UNEF | 30,8 | 19,3 | 12 | 19,2 | 43,1 | 35,7 | 52,8 | 21,5 |
| 19 | 1 1/16-18UNEF | 34,1 | 22,3 | 12 | 19,6 | 47,9 | 39,7 | 57,1 | 23,0 |
| 21 | 1 3/16-18UNEF | 37,3 | 25,8 | 16 | 20,4 | 47,9 | 42,2 | 57,1 | 25,0 |
| 23 | 1 5/16-18UNEF | 41,0 | 28,3 | 16 | 20,8 | 56,5 | 45,2 | 64,7 | 26,0 |
| 25 | 1 7/16-18UNEF | 43,7 | 31,5 | 16 | 21,7 | 56,5 | 48,2 | 64,7 | 28,0 |

IF MAX ENTRY IS EXCEEDED, ADAPTOR ASSEMBLY IS SUPPLIED AS A STYLE T2 (T2 DOES NOT FEATURE IN THE PART NUMBER) IN WHICH CASE DIMENSIONS C,D,E,F & K DO NOT APPLY AND MIN L IS L3.

TABLE 2

| ENTRY SIZE | ØG MIN |
|---|---|
| 04 | 7,9 |
| 06 | 11,1 |
| 08 | 14,3 |
| 10 | 15,9 |
| 12 | 19,1 |
| 16 | 23,8 |
| 20 | 31,8 |
| 24 | 34,9 |
| 28 | 41,3 |
| 32 | 47,6 |

TABLE 3

| CODE | FINISH |
|---|---|
| C | ELECTROLESS NICKEL |
| B | CADMIUM OLIVE DRAB OVER ELECTROLESS NICKEL |
| ZB | ZINC COBALT OLIVE DRAB OVER ELECTROLESS NICKEL |
| ZN | ZINC NICKEL BLACK PASSIVATE OVER ELECTROLESS NICKEL |

LIST NOT EXHAUSTIVE, SEE PLATING TABLE FOR OTHER OPTIONS

39F1-17-08-1-C-NE-CC-L3

- SERIES
- CONNECTOR INTERFACE
- ANGLE
- SHELL SIZE (TABLE 1)
- ENTRY SIZE (TABLE 2)
- MATERIAL
  - ALUMINIUM ALLOY
- FINISH (TABLE 3)
- NON ENVIRONMENTAL OPTION
- CABLE CLAMP OPTION
  - OMIT FOR PLAIN NUT
- LENGTH CODE (STRAIGHT ONLY)
  - (1/2" INCREMENTS, MINIMUM L2 = 1")

**For tooling and assembly instructions see www.polamco.com**

Backshell supplied with Cone(s)
Sealing and strain relief achieved with Heat Shrink Boot for non CC versions (see page 354)
Adhesive if required for assembly (see page 352)
Screenbraid for EMC/RFI screening (see page 350)

DRAWING NOT TO SCALE, DIMENSIONS IN MM

SEE PAGES 18-26 FOR COMPLETE LIST OF AVAILABLE MATERIALS, FINISHES AND CONNECTOR INTERFACES
(DIMENSIONS, FORM AND O RING SUBJECT TO CHANGE DEPENDING ON BACKSHELL MATERIAL AND CONNECTOR INTERFACE)



THIS DRAWING IS THE PROPERTY OF POLAMCO LTD AND MUST NOT BE USED FOR COMMERCIAL PURPOSES WITHOUT WRITTEN CONSENT OF THE COMPANY

# 39F (NE) - Cone Clamp Backshell Non-Environmental

## Interface F - MIL-DTL-38999 SERIES II

Polamco

**Interconnect Solutions Worldwide**

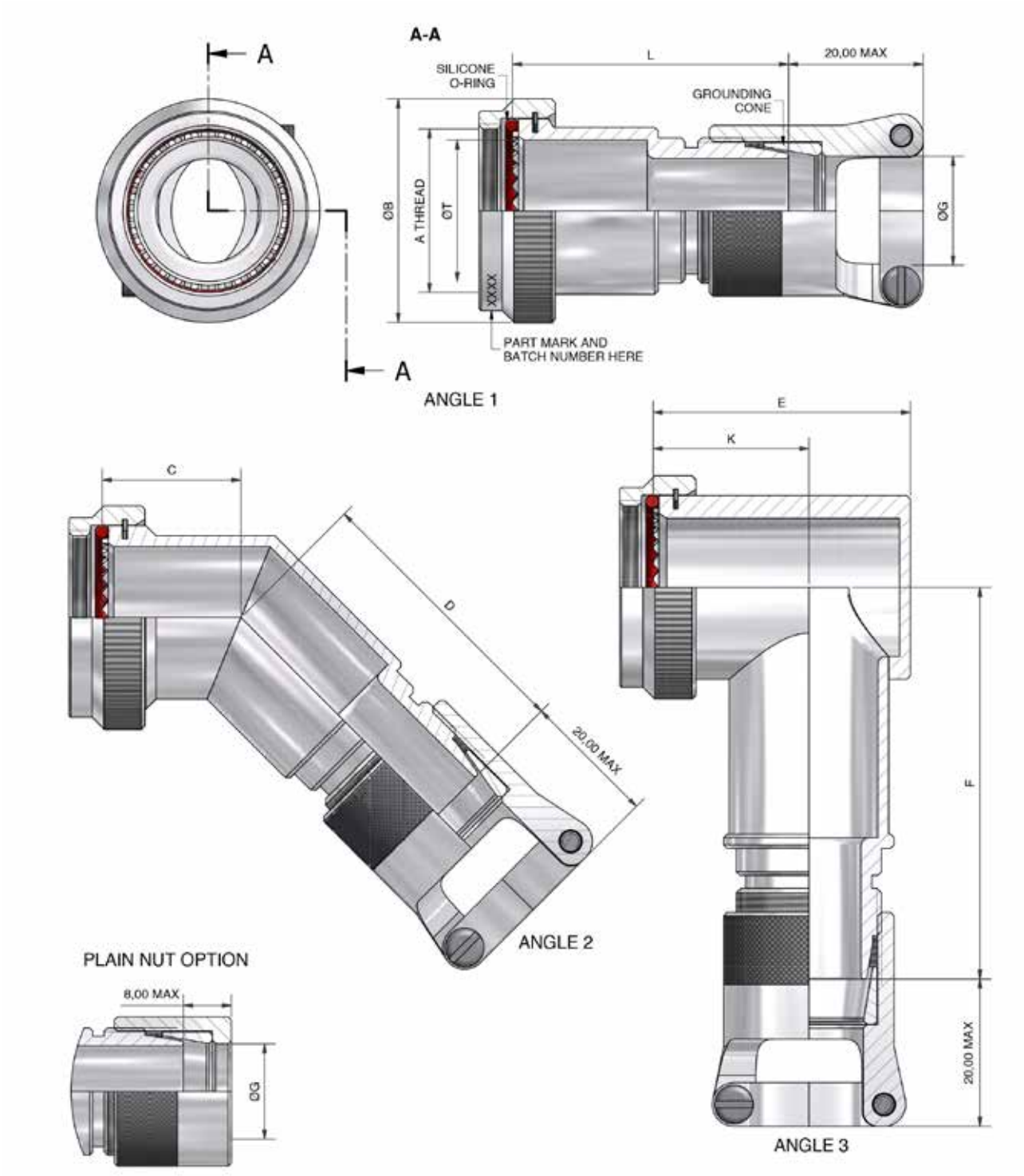


DRAWING NOT TO SCALE, DIMENSIONS IN MM

SEE PAGES 18-26 FOR COMPLETE LIST OF AVAILABLE MATERIALS, FINISHES AND CONNECTOR INTERFACES
(DIMENSIONS, FORM AND O RING SUBJECT TO CHANGE DEPENDING ON BACKSHELL MATERIAL AND CONNECTOR INTERFACE)





THIS DRAWING IS THE PROPERTY OF POLAMCO LTD AND MUST NOT BE USED FOR COMMERCIAL PURPOSES WITHOUT WRITTEN CONSENT OF THE COMPANY

# 39F (NE) - Cone Clamp Backshell Non-Environmental

## Interface F - MIL-DTL-38999 SERIES II

Polamco

**Interconnect Solutions Worldwide**

TABLE 1

| SHELL SIZE | A THREAD | ØB MAX | ØT MIN | MAX ENTRY | C ±0,5 | D MAX | E MAX | F MAX | K ±0,5 |
|---|---|---|---|---|---|---|---|---|---|
| 08 | 7/16-28UNEF | 18,3 | 6,6 | - | 16,4 | 30,5 | 22,7 | 39,2 | 15,0 |
| 10 | 9/16-24UNEF | 21,5 | 10,1 | 04 | 17,2 | 30,5 | 26,2 | 42,3 | 17,0 |
| 12 | 11/16-24UNEF | 24,5 | 12,9 | 06 | 17,6 | 32,5 | 29,2 | 42,8 | 18,0 |
| 14 | 13/16-20UNEF | 27,8 | 16,1 | 10 | 18,5 | 40,3 | 32,2 | 50,5 | 20,0 |
| 16 | 15/16-20UNEF | 30,8 | 19,3 | 12 | 19,2 | 43,1 | 35,7 | 52,8 | 21,5 |
| 18 | 1 1/16-18UNEF | 34,1 | 21,7 | 12 | 19,6 | 47,9 | 39,7 | 57,1 | 23,0 |
| 20 | 1 3/16-18UNEF | 37,3 | 24,9 | 16 | 20,4 | 47,9 | 42,2 | 57,1 | 25,0 |
| 22 | 1 5/16-18UNEF | 40,5 | 28,1 | 16 | 20,8 | 56,5 | 45,2 | 64,7 | 26,0 |
| 24 | 1 7/16-18UNEF | 43,7 | 31,3 | 16 | 21,7 | 56,5 | 48,2 | 64,7 | 28,0 |

IF MAX ENTRY IS EXCEEDED, ADAPTOR ASSEMBLY IS SUPPLIED AS A STYLE T2 (T2 DOES NOT FEATURE IN THE PART NUMBER) IN WHICH CASE DIMENSIONS C,D,E,F & K DO NOT APPLY AND MIN L IS L3.

TABLE 2

| ENTRY SIZE | ØG MIN |
|---|---|
| 04 | 7,9 |
| 06 | 11,1 |
| 08 | 14,3 |
| 10 | 15,9 |
| 12 | 19,1 |
| 16 | 23,8 |
| 20 | 31,8 |
| 24 | 34,9 |
| 28 | 41,3 |
| 32 | 47,6 |

TABLE 3

| CODE | FINISH |
|---|---|
| C | ELECTROLESS NICKEL |
| B | CADMIUM OLIVE DRAB OVER ELECTROLESS NICKEL |
| ZB | ZINC COBALT OLIVE DRAB OVER ELECTROLESS NICKEL |
| ZN | ZINC NICKEL BLACK PASSIVATE OVER ELECTROLESS NICKEL |

LIST NOT EXHAUSTIVE, SEE PLATING TABLE FOR OTHER OPTIONS

39F1-16-08-1-C-NE-CC-L3

- SERIES
- CONNECTOR INTERFACE
- ANGLE
- SHELL SIZE (TABLE 1)
- ENTRY SIZE (TABLE 2)
- MATERIAL
  - ALUMINIUM ALLOY
- FINISH (TABLE 3)
- NON ENVIRONMENTAL OPTION
- CABLE CLAMP OPTION
  - OMIT FOR PLAIN NUT
- LENGTH CODE (STRAIGHT ONLY)
  - (1/2" INCREMENTS, MINIMUM L2 = 1")

**For tooling and assembly instructions see www.polamco.com**

Backshell supplied with Cone(s)
Sealing and strain relief achieved with Heat Shrink Boot for non CC versions (see page 354)
Adhesive if required for assembly (see page 352)
Screenbraid for EMC/RFI screening (see page 350)

DRAWING NOT TO SCALE, DIMENSIONS IN MM

SEE PAGES 18-26 FOR COMPLETE LIST OF AVAILABLE MATERIALS, FINISHES AND CONNECTOR INTERFACES
(DIMENSIONS, FORM AND O RING SUBJECT TO CHANGE DEPENDING ON BACKSHELL MATERIAL AND CONNECTOR INTERFACE)



THIS DRAWING IS THE PROPERTY OF POLAMCO LTD AND MUST NOT BE USED FOR COMMERCIAL PURPOSES WITHOUT WRITTEN CONSENT OF THE COMPANY

# 39H (NE) - Cone Clamp Backshell Non-Environmental

## Interface H - MIL-DTL-38999 SERIES III & IV

Polamco

**Interconnect Solutions Worldwide**

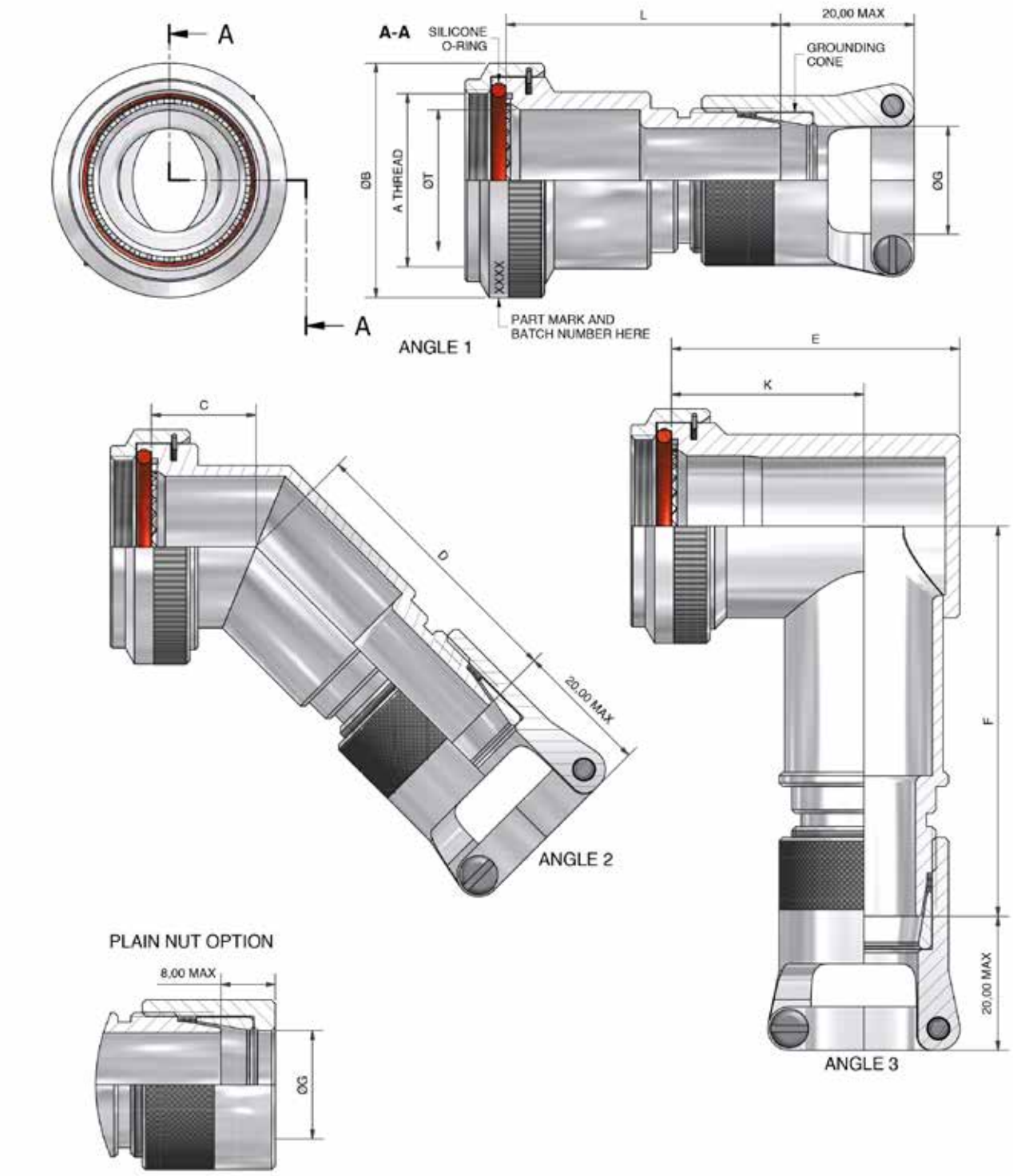


DRAWING NOT TO SCALE, DIMENSIONS IN MM

SEE PAGES 18-26 FOR COMPLETE LIST OF AVAILABLE MATERIALS, FINISHES AND CONNECTOR INTERFACES
(DIMENSIONS, FORM AND O RING SUBJECT TO CHANGE DEPENDING ON BACKSHELL MATERIAL AND CONNECTOR INTERFACE)





THIS DRAWING IS THE PROPERTY OF POLAMCO LTD AND MUST NOT BE USED FOR COMMERCIAL PURPOSES WITHOUT WRITTEN CONSENT OF THE COMPANY

# 39H (NE) - Cone Clamp Backshell Non-Environmental

## Interface H - MIL-DTL-38999 SERIES III & IV

Polamco

**Interconnect Solutions Worldwide**

TABLE 1

| SHELL SIZE | A THREAD | ØB MAX | ØT MIN | MAX ENTRY | C MAX | D MAX | E MAX | F MAX | K ±0,5 |
|---|---|---|---|---|---|---|---|---|---|
| 09 | M12x1.0 | 18,0 | 6,7 | - | 13,1 | 30,5 | 25,7 | 39,2 | 17,5 |
| 11 | M15x1.0 | 21,0 | 10,2 | 04 | 13,9 | 30,5 | 26,7 | 42,3 | 17,5 |
| 13 | M18x1.0 | 24,5 | 13,5 | 06 | 14,5 | 32,5 | 31,2 | 42,8 | 20,0 |
| 15 | M22x1.0 | 29,0 | 16,2 | 10 | 15,5 | 40,3 | 37,2 | 50,5 | 24,5 |
| 17 | M25x1.0 | 32,5 | 19,4 | 12 | 16,1 | 43,1 | 40,2 | 52,8 | 26,7 |
| 19 | M28x1.0 | 35,5 | 21,8 | 12 | 16,8 | 47,9 | 44,7 | 57,1 | 27,0 |
| 21 | M31x1.0 | 37,0 | 25,1 | 16 | 17,1 | 47,9 | 49,2 | 57,1 | 30,5 |
| 23 | M34x1.0 | 40,0 | 28,2 | 16 | 17,7 | 56,5 | 51,7 | 64,7 | 31,5 |
| 25 | M37x1.0 | 43,5 | 31,4 | 16 | 18,4 | 56,5 | 53,2 | 64,7 | 28,5 |

IF MAX ENTRY IS EXCEEDED, ADAPTOR ASSEMBLY IS SUPPLIED AS A STYLE T2 (T2 DOES NOT FEATURE IN THE PART NUMBER) IN WHICH CASE DIMENSIONS C,D,E,F & K DO NOT APPLY AND MIN L IS L3.

TABLE 2

| ENTRY SIZE | ØG MIN |
|---|---|
| 04 | 7,9 |
| 06 | 11,1 |
| 08 | 14,3 |
| 10 | 15,9 |
| 12 | 19,1 |
| 16 | 23,8 |
| 20 | 31,8 |
| 24 | 34,9 |
| 28 | 41,3 |
| 32 | 47,6 |

TABLE 3

| CODE | FINISH |
|---|---|
| C | ELECTROLESS NICKEL |
| B | CADMIUM OLIVE DRAB OVER ELECTROLESS NICKEL |
| ZB | ZINC COBALT OLIVE DRAB OVER ELECTROLESS NICKEL |
| ZN | ZINC NICKEL BLACK PASSIVATE OVER ELECTROLESS NICKEL |

LIST NOT EXHAUSTIVE, SEE PLATING TABLE FOR OTHER OPTIONS

39H1-17-08-1-C-NE-CC-L3

- SERIES
- CONNECTOR INTERFACE
- ANGLE
- SHELL SIZE (TABLE 1)
- ENTRY SIZE (TABLE 2)
- MATERIAL
  - ALUMINIUM ALLOY
- FINISH (TABLE 3)
- NON ENVIRONMENTAL OPTION
- CABLE CLAMP OPTION
  - OMIT FOR PLAIN NUT
- LENGTH CODE (STRAIGHT ONLY)
  - (1/2" INCREMENTS, MINIMUM L2 = 1")

CONE TERMINATION

**For tooling and assembly instructions see www.polamco.com**

Backshell supplied with Cone(s)
Sealing and strain relief achieved with Heat Shrink Boot for non CC versions (see page 354)
Adhesive if required for assembly (see page 352)
Screenbraid for EMC/RFI screening (see page 350)

DRAWING NOT TO SCALE, DIMENSIONS IN MM

SEE PAGES 18-26 FOR COMPLETE LIST OF AVAILABLE MATERIALS, FINISHES AND CONNECTOR INTERFACES
(DIMENSIONS, FORM AND O RING SUBJECT TO CHANGE DEPENDING ON BACKSHELL MATERIAL AND CONNECTOR INTERFACE)

THIS DRAWING IS THE PROPERTY OF POLAMCO LTD AND MUST NOT BE USED FOR COMMERCIAL PURPOSES WITHOUT WRITTEN CONSENT OF THE COMPANY

# CS64F - Cone Clamp Cable Sealing Backshell

## Interface F - MIL-DTL-38999 SERIES I

Polamco

**Interconnect Solutions Worldwide**

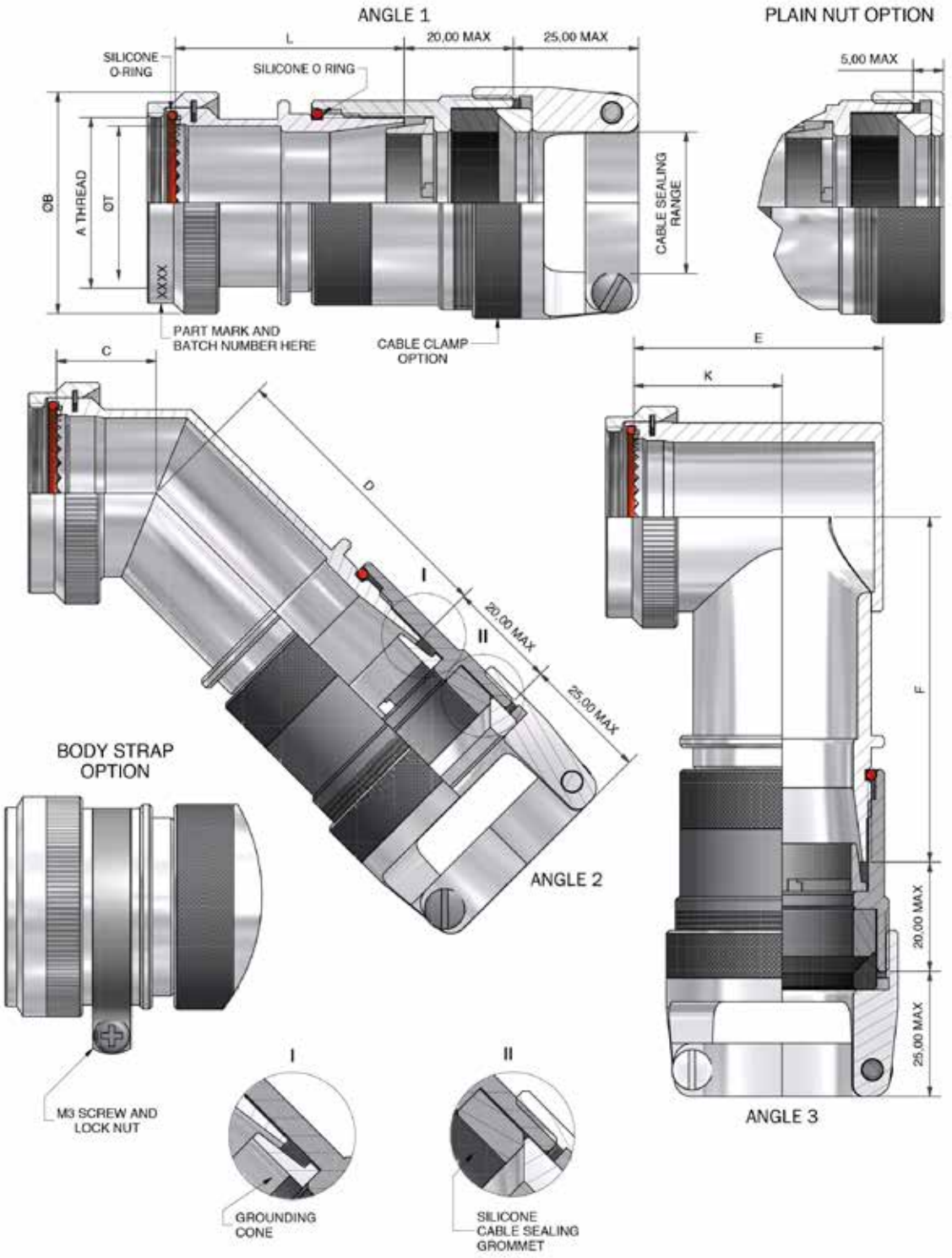


DRAWING NOT TO SCALE, DIMENSIONS IN MM

SEE PAGES 18-26 FOR COMPLETE LIST OF AVAILABLE MATERIALS, FINISHES AND CONNECTOR INTERFACES
(DIMENSIONS, FORM AND O RING SUBJECT TO CHANGE DEPENDING ON BACKSHELL MATERIAL AND CONNECTOR INTERFACE)





THIS DRAWING IS THE PROPERTY OF POLAMCO LTD AND MUST NOT BE USED FOR COMMERCIAL PURPOSES WITHOUT WRITTEN CONSENT OF THE COMPANY

# CS64F - Cone Clamp Cable Sealing Backshell

## Interface F - MIL-DTL-38999 SERIES I

Polamco

**Interconnect Solutions Worldwide**

TABLE 1

| SHELL SIZE | A THREAD | B MAX | T MIN | MAX ENTRY | C MAX | D MAX | E MAX | F MAX | K +/- 0,5 |
|---|---|---|---|---|---|---|---|---|---|
| 09 | 7/16-28 UNEF | 18,0 | 6,8 | - | 16,4 | 31,8 | 22,7 | 40,5 | 15,0 |
| 11 | 9/16-24 UNEF | 21,0 | 10,2 | 04 | 17,2 | 31,8 | 26,2 | 43,6 | 17,0 |
| 13 | 11/16-24 UNEF | 24,5 | 13,1 | 06 | 17,6 | 33,8 | 29,2 | 44,1 | 18,0 |
| 15 | 13/16-20 UNEF | 27,8 | 16,2 | 10 | 18,5 | 41,6 | 32,2 | 51,8 | 20,0 |
| 17 | 15/16-20 UNEF | 30,8 | 19,3 | 12 | 19,2 | 44,4 | 35,7 | 54,1 | 21,5 |
| 19 | 1 1/16-18 UNEF | 34,1 | 22,3 | 12 | 19,6 | 49,2 | 39,7 | 58,4 | 23,0 |
| 21 | 1 3/16-18 UNEF | 37,3 | 25,8 | 16 | 20,4 | 49,2 | 42,2 | 58,4 | 25,0 |
| 23 | 1 5/16-18 UNEF | 41,0 | 28,3 | 16 | 20,8 | 57,8 | 45,2 | 66,0 | 26,0 |
| 25 | 1 7/16-18 UNEF | 43,7 | 31,5 | 16 | 21,7 | 57,8 | 48,2 | 66,0 | 28,0 |

IF MAX ENTRY IS EXCEEDED, ADAPTOR ASSEMBLY IS SUPPLIED AS STYLE 2 (T2 DOES NOT FEATURE IN THE PART NUMBER) IN WHICH CASE DIMENSIONS C, D, E, F & K DO NOT APPLY AND MIN L IS L3

TABLE 2

| ENTRY SIZE | CABLE SEALING RANGE |
|---|---|
| 04 | 3,2 - 7,9 |
| 06 | 6,4 - 11,1 |
| 08 | 9,8 - 14,3 |
| 10 | 8,9 - 15,9 |
| 12 | 12,7 - 19,1 |
| 16 | 15,9 - 23,8 |
| 20 | 22,2 - 31,8 |
| 24 | 25,4 - 34,9 |
| 28 | 31,8 - 41,3 |
| 32 | 36,5 - 47,6 |

TABLE 3

| CODE | FINISH |
|---|---|
| C | ELECTROLESS NICKEL |
| B | CADMIUM OLIVE DRAB OVER ELECTROLESS NICKEL |
| ZB | ZINC COBALT OLIVE DRAB OVER ELECTROLESS NICKEL |
| ZN | ZINC NICKEL BLACK PASSIVATE OVER ELECTROLESS NICKEL |

LIST NOT EXHAUSTIVE, SEE PLATING TABLE FOR OTHER OPTIONS

CS64F1-21-16-1-C-CC-L3-BS

- SERIES
- CONNECTOR INTERFACE
- ANGLE
- SHELL SIZE (TABLE 1)
- ENTRY SIZE (TABLE 2)
- MATERIAL
  - ALUMINIUM ALLOY
- FINISH (TABLE 3)
- CABLE CLAMP OPTION
  - OMIT FOR PLAIN NUT
- LENGTH CODE (STRAIGHT ONLY)
  - 1/2" INCREMENTS, MINIMUM L2(=1")
- BODY STRAP OPTION
  - (L3 MIN ON STRAIGHT, DIMENSIONS C,E & K DO NOT APPLY)

**For tooling and assembly instructions see www.polamco.com**

Backshell supplied with Cone(s)
Sealing and strain relief achieved with Heat Shrink Boot for non CC versions (see page 354)
Adhesive if required for assembly (see page 352)
Screenbraid for EMC/RFI screening (see page 350)

DRAWING NOT TO SCALE, DIMENSIONS IN MM

SEE PAGES 18-26 FOR COMPLETE LIST OF AVAILABLE MATERIALS, FINISHES AND CONNECTOR INTERFACES
(DIMENSIONS, FORM AND O RING SUBJECT TO CHANGE DEPENDING ON BACKSHELL MATERIAL AND CONNECTOR INTERFACE)



THIS DRAWING IS THE PROPERTY OF POLAMCO LTD AND MUST NOT BE USED FOR COMMERCIAL PURPOSES WITHOUT WRITTEN CONSENT OF THE COMPANY

# CS64F - Cone Clamp Cable Sealing Backshell

## Interface F - MIL-DTL-38999 SERIES II

Polamco

**Interconnect Solutions Worldwide**

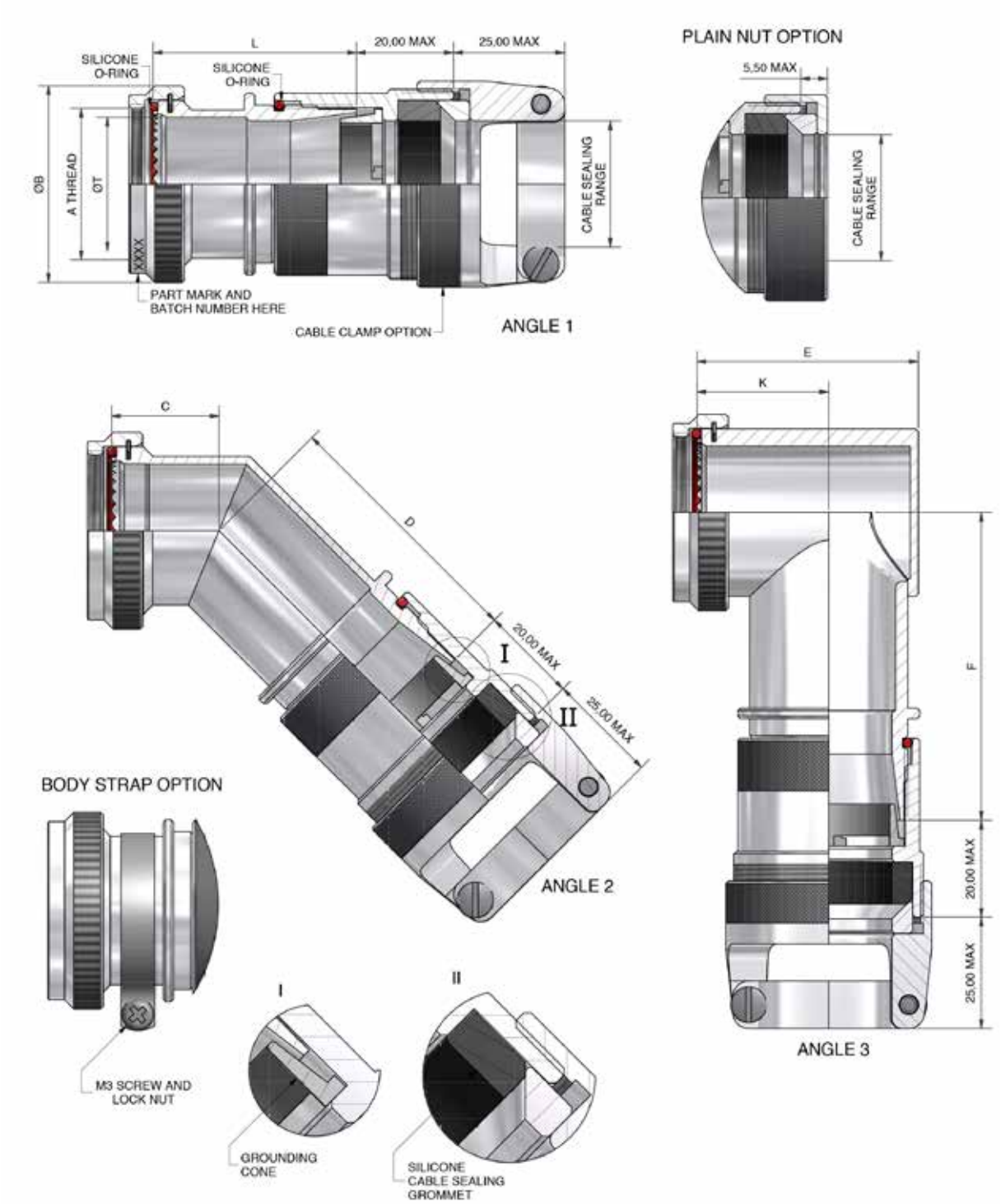


DRAWING NOT TO SCALE, DIMENSIONS IN MM

SEE PAGES 18-26 FOR COMPLETE LIST OF AVAILABLE MATERIALS, FINISHES AND CONNECTOR INTERFACES
(DIMENSIONS, FORM AND O RING SUBJECT TO CHANGE DEPENDING ON BACKSHELL MATERIAL AND CONNECTOR INTERFACE)





THIS DRAWING IS THE PROPERTY OF POLAMCO LTD AND MUST NOT BE USED FOR COMMERCIAL PURPOSES WITHOUT WRITTEN CONSENT OF THE COMPANY

# CS64F - Cone Clamp Cable Sealing Backshell

## Interface F - MIL-DTL-38999 SERIES II

Polamco

**Interconnect Solutions Worldwide**

TABLE 1

| SHELL SIZE | A THREAD | ØB MAX | ØT MIN | C ±0,5 | D MAX | E MAX | F MAX | K ±0,5 | MAX ENTRY |
|---|---|---|---|---|---|---|---|---|---|
| 08 | 7/16-28UNEF | 18,3 | 6,6 | 16,4 | 31,8 | 22,7 | 40,5 | 15,0 | - |
| 10 | 9/16-24UNEF | 21,5 | 10,1 | 17,2 | 31,8 | 26,2 | 43,6 | 17,0 | 04 |
| 12 | 11/16-24UNEF | 24,5 | 12,9 | 17,6 | 33,8 | 29,2 | 44,1 | 18,0 | 06 |
| 14 | 13/16-20UNEF | 27,8 | 16,1 | 18,5 | 41,6 | 32,2 | 51,8 | 20,0 | 10 |
| 16 | 15/16-20UNEF | 30,8 | 19,3 | 20,2 | 44,4 | 35,7 | 54,1 | 21,5 | 12 |
| 18 | 1 1/16-18UNEF | 34,1 | 21,7 | 19,6 | 49,2 | 39,7 | 58,4 | 23,0 | 12 |
| 20 | 1 3/16-18UNEF | 37,3 | 24,9 | 20,4 | 49,2 | 42,2 | 58,4 | 25,0 | 16 |
| 22 | 1 5/16-18UNEF | 40,5 | 28,1 | 20,8 | 57,8 | 45,2 | 66,0 | 26,0 | 16 |
| 24 | 1 7/16-18UNEF | 43,7 | 31,3 | 21,7 | 57,8 | 48,2 | 66,0 | 28,0 | 16 |

IF MAX ENTRY IS EXCEEDED, ADAPTOR ASSEMBLY IS SUPPLIED AS STYLE 2 (T2 DOES NOT FEATURE IN THE PART NUMBER) IN WHICH CASE DIMENSIONS C, D, E, F & K DO NOT APPLY AND MIN L IS L3

TABLE 2

| ENTRY SIZE | CABLE SEALING RANGE |
|---|---|
| 04 | 3,2-7,9 |
| 06 | 6,4-11,1 |
| 08 | 9,8-14,3 |
| 10 | 8,9-15,9 |
| 12 | 12,7-19,1 |
| 16 | 15,9-23,8 |
| 20 | 22,2-31,8 |
| 24 | 25,4-34,9 |
| 28 | 31,8-41,3 |
| 32 | 36,5-47,6 |

TABLE 3

| CODE | FINISH |
|---|---|
| C | ELECTROLESS NICKEL |
| B | CADMIUM OLIVE DRAB OVER ELECTROLESS NICKEL |
| ZB | ZINC COBALT OLIVE DRAB OVER ELECTROLESS NICKEL |
| ZN | ZINC NICKEL BLACK PASSIVATE OVER ELECTROLESS NICKEL |

LIST NOT EXHAUSTIVE, SEE PLATING TABLE FOR OTHER OPTIONS

CS64F1-20-16-1-C-CC-L3-BS

- SERIES
- CONNECTOR INTERFACE
- ANGLE
- SHELL SIZE (TABLE 1)
- ENTRY SIZE (TABLE 2)
- MATERIAL
  - ALUMINIUM ALLOY
- FINISH (TABLE 3)
- CABLE CLAMP OPTION
  - OMIT FOR PLAIN NUT
- LENGTH CODE (STRAIGHT ONLY)
  - 1/2" INCREMENTS, MINIMUM L2(=1")
- BODY STRAP OPTION
  - (L3 MIN ON STRAIGHT, DIMENSIONS C,E & K DO NOT APPLY)

**For tooling and assembly instructions see www.polamco.com**

Backshell supplied with Cone(s)
Sealing and strain relief achieved with Heat Shrink Boot for non CC versions (see page 354)
Adhesive if required for assembly (see page 352)
Screenbraid for EMC/RFI screening (see page 350)

DRAWING NOT TO SCALE, DIMENSIONS IN MM

SEE PAGES 18-26 FOR COMPLETE LIST OF AVAILABLE MATERIALS, FINISHES AND CONNECTOR INTERFACES
(DIMENSIONS, FORM AND O RING SUBJECT TO CHANGE DEPENDING ON BACKSHELL MATERIAL AND CONNECTOR INTERFACE)

THIS DRAWING IS THE PROPERTY OF POLAMCO LTD AND MUST NOT BE USED FOR COMMERCIAL PURPOSES WITHOUT WRITTEN CONSENT OF THE COMPANY

# CS64H - Cone Clamp Cable Sealing Backshell

## Interface H - MIL-DTL-38999 SERIES III & IV

Polamco

**Interconnect Solutions Worldwide**

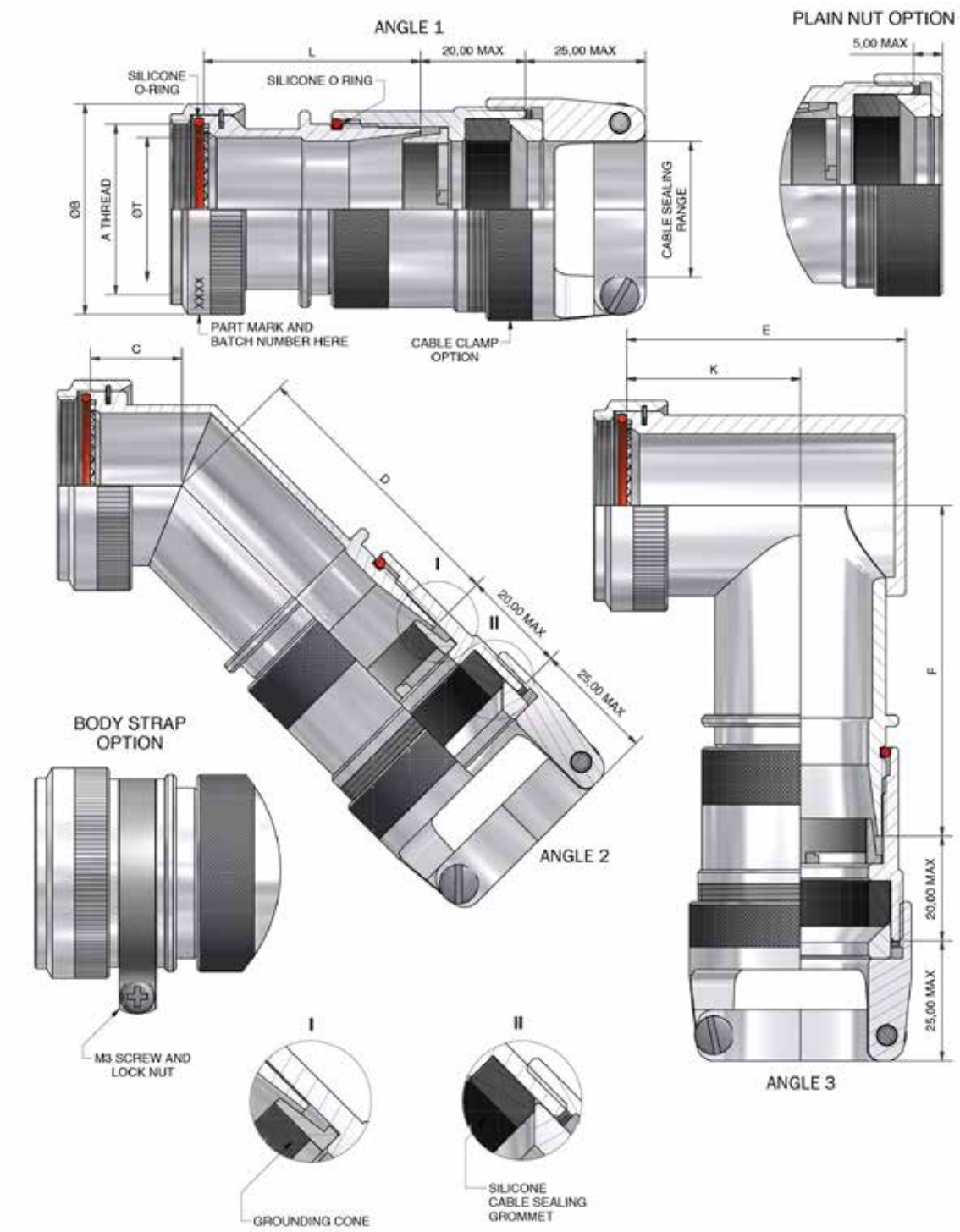


DRAWING NOT TO SCALE, DIMENSIONS IN MM

SEE PAGES 18-26 FOR COMPLETE LIST OF AVAILABLE MATERIALS, FINISHES AND CONNECTOR INTERFACES
(DIMENSIONS, FORM AND O RING SUBJECT TO CHANGE DEPENDING ON BACKSHELL MATERIAL AND CONNECTOR INTERFACE)





THIS DRAWING IS THE PROPERTY OF POLAMCO LTD AND MUST NOT BE USED FOR COMMERCIAL PURPOSES WITHOUT WRITTEN CONSENT OF THE COMPANY

# CS64H - Cone Clamp Cable Sealing Backshell

## Interface H - MIL-DTL-38999 SERIES III & IV

Polamco

**Interconnect Solutions Worldwide**

TABLE 1

| SHELL SIZE | A THREAD | ØB MAX | ØT MIN | MAX ENTRY | C MAX | D MAX | E MAX | F MAX | K ±0,5 |
|---|---|---|---|---|---|---|---|---|---|
| 09 | M12 x 1.0 | 18,0 | 6,7 | - | 13,1 | 31,8 | 25,7 | 40,5 | 17,5 |
| 11 | M15 x 1.0 | 21,0 | 10,2 | 04 | 13,9 | 31,8 | 26,7 | 43,6 | 17,5 |
| 13 | M18 x 1.0 | 24,5 | 13,5 | 06 | 14,5 | 33,8 | 31,2 | 44,1 | 20,0 |
| 15 | M22 x 1.0 | 29,0 | 16,2 | 10 | 15,5 | 41,6 | 37,2 | 51,8 | 24,5 |
| 17 | M25 x 1.0 | 32,5 | 19,4 | 12 | 16,1 | 44,4 | 40,2 | 54,1 | 26,7 |
| 19 | M28 x 1.0 | 35,5 | 21,8 | 12 | 16,8 | 49,2 | 44,7 | 58,4 | 27,0 |
| 21 | M31 x 1.0 | 37,0 | 25,1 | 16 | 17,1 | 49,2 | 49,2 | 58,4 | 30,5 |
| 23 | M34 x 1.0 | 40,0 | 28,2 | 16 | 17,7 | 57,8 | 51,7 | 66,0 | 31,5 |
| 25 | M37 x 1.0 | 43,5 | 31,4 | 16 | 18,4 | 57,8 | 53,2 | 66,0 | 28,5 |

IF MAX ENTRY IS EXCEEDED, ADAPTOR ASSEMBLY IS SUPPLIED AS STYLE 2 (T2 DOES NOT FEATURE IN THE PART NUMBER) IN WHICH CASE DIMENSIONS C, D, E, F & K DO NOT APPLY AND MIN L IS L3

TABLE 2

| ENTRY SIZE | CABLE SEALING RANGE |
|---|---|
| 04 | 3,2 - 7,9 |
| 06 | 6,4 - 11,1 |
| 08 | 9,8 - 14,3 |
| 10 | 8,9 - 15,9 |
| 12 | 12,7 - 19,1 |
| 16 | 15,9 - 23,8 |
| 20 | 22,2 - 31,8 |
| 24 | 25,4 - 34,9 |
| 28 | 31,8 - 41,3 |
| 32 | 36,5 - 47,6 |

TABLE 3

| CODE | FINISH |
|---|---|
| C | ELECTROLESS NICKEL |
| B | CADMIUM OLIVE DRAB OVER ELECTROLESS NICKEL |
| ZB | ZINC COBALT OLIVE DRAB OVER ELECTROLESS NICKEL |
| ZN | ZINC NICKEL BLACK PASSIVATE OVER ELECTROLESS NICKEL |

LIST NOT EXHAUSTIVE, SEE PLATING TABLE FOR OTHER OPTIONS

CS64H1-21-16-1-C-CC-L3-BS

- SERIES
- CONNECTOR INTERFACE
- ANGLE
- SHELL SIZE (TABLE 1)
- ENTRY SIZE (TABLE 2)
- MATERIAL
  - ALUMINIUM ALLOY
- FINISH (TABLE 3)
- CABLE CLAMP OPTION
  - OMIT FOR PLAIN NUT
- LENGTH CODE (STRAIGHT ONLY)
  - 1/2" INCREMENTS, MINIMUM L2(=1")
- BODY STRAP OPTION
  - (L3 MIN ON STRAIGHT, DIMENSIONS C,E & K DO NOT APPLY)

**For tooling and assembly instructions see www.polamco.com**

Backshell supplied with Cone(s)
Sealing and strain relief achieved with Heat Shrink Boot for non CC versions (see page 354)
Adhesive if required for assembly (see page 352)
Screenbraid for EMC/RFI screening (see page 350)

DRAWING NOT TO SCALE, DIMENSIONS IN MM

SEE PAGES 18-26 FOR COMPLETE LIST OF AVAILABLE MATERIALS, FINISHES AND CONNECTOR INTERFACES
(DIMENSIONS, FORM AND O RING SUBJECT TO CHANGE DEPENDING ON BACKSHELL MATERIAL AND CONNECTOR INTERFACE)



THIS DRAWING IS THE PROPERTY OF POLAMCO LTD AND MUST NOT BE USED FOR COMMERCIAL PURPOSES WITHOUT WRITTEN CONSENT OF THE COMPANY

# Section Index


8 Backshell Range

16 Product Information

29 Screened Backshells

275 Non-Screened Backshells

323 Conduit Backshells & Conduit

333 Thread Adaptors & Extenders

1 Associated Products

357 Glossary & Terms

# Pre-installed Heat Shrink Boots on the back of Backshells

## Characteristics

- Kits for screened or unscreened options
- Reliable single part construction for combined screen termination and environmental protection
- High screening performance (90dbs to 300MHz)
- Low fire, zero Halogen Heat Shrink, low smoke, toxicity and flammability
- All parts machined from solid material for reliable strength and performance – easy to install/repair
- Available in all materials and straight, 45 or 90 degree options
- Compatible with Mil-Spec dimensions and performance
- Options on low profile, extended length and alternative angles
- Applications – all industries including shipbuilding and submarines

## Benefits

- One-piece part
- Easy installation
- One part covers wide cable range
- Lightweight

TAK Kits are constructed from braided Magna-Form backshells and heat shrinkable moulded parts.
Installation is effected by coupling the adaptor end to the connector and shrinking the rear moulded part onto the cable with a hot air gun. Flexible conductive adhesive ensures reliable connection to the cable screen while the hot melt adhesive provides a strong bond onto the cable.

# TAKF - Heat Shrink Backshell Kit

## Interface F - MIL-DTL-38999 SERIES I

Please note that TAK kits are not RoHS compliant

**Interconnect Solutions Worldwide**

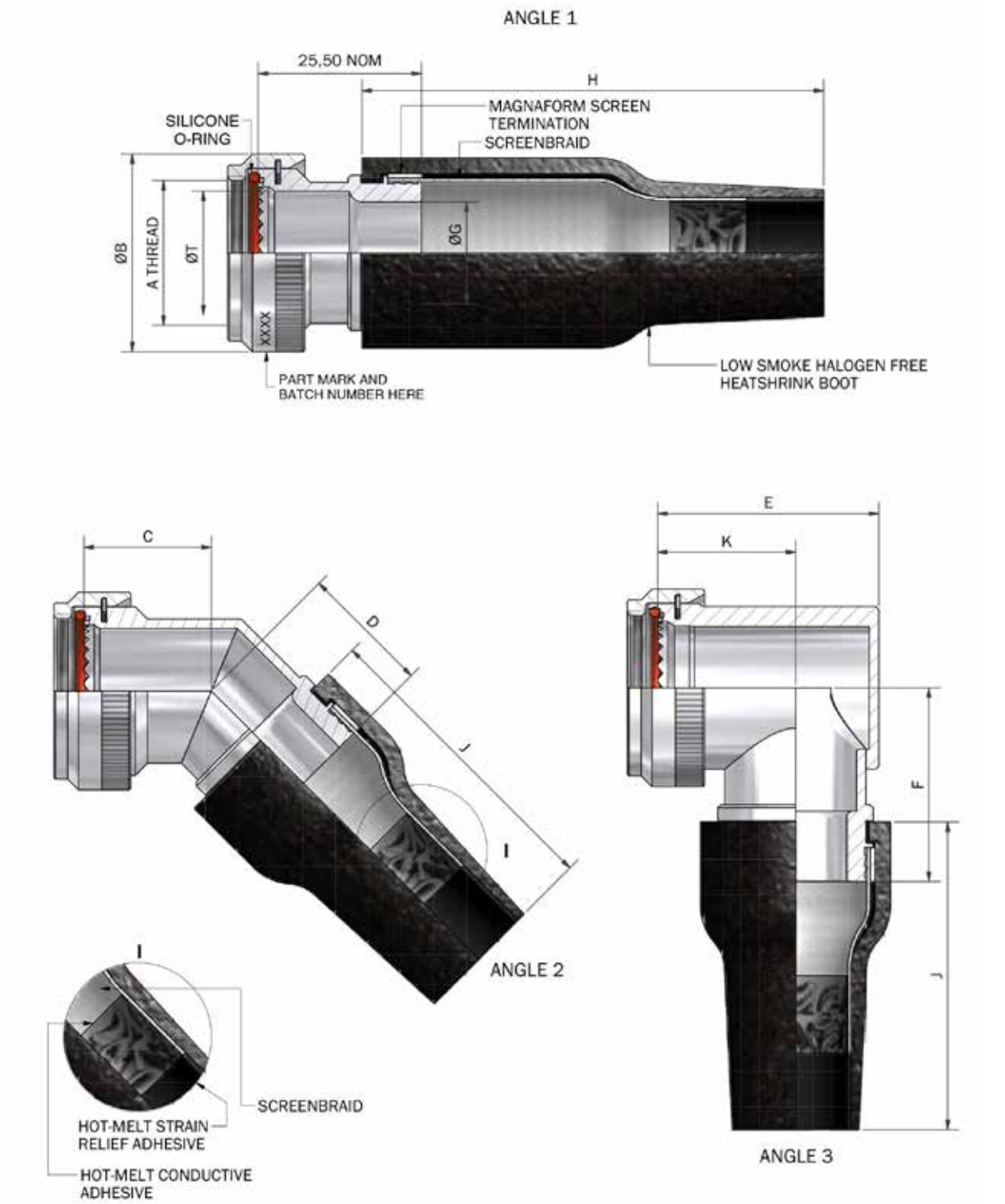


DRAWING NOT TO SCALE, DIMENSIONS IN MM

SEE PAGES 18-26 FOR COMPLETE LIST OF AVAILABLE MATERIALS, FINISHES AND CONNECTOR INTERFACES
(DIMENSIONS, FORM AND O RING SUBJECT TO CHANGE DEPENDING ON BACKSHELL MATERIAL AND CONNECTOR INTERFACE)



THIS DRAWING IS THE PROPERTY OF POLAMCO LTD AND MUST NOT BE USED FOR COMMERCIAL PURPOSES WITHOUT WRITTEN CONSENT OF THE COMPANY

# TAKF - Heat Shrink Backshell Kit

## Interface F - MIL-DTL-38999 SERIES I

Polamco

**Interconnect Solutions Worldwide**

TABLE 1

| SHELL SIZE | A THREAD | ØB MAX | ØT MIN | C ±0,5 | D ±0,5 | E MAX | F MAX | K ±0,5 |
|---|---|---|---|---|---|---|---|---|
| 09 | 7/16-28 UNEF | 18,0 | 6,8 | 16,4 | 17,1 | 22,7 | 24,0 | 15,0 |
| 11 | 9/16-24 UNEF | 21,0 | 10,2 | 17,2 | 18,2 | 26,2 | 25,7 | 17,0 |
| 13 | 11/16-24 UNEF | 24,5 | 13,1 | 17,6 | 18,6 | 29,2 | 27,2 | 18,0 |
| 15 | 13/16-20 UNEF | 27,8 | 16,2 | 18,5 | 19,5 | 32,2 | 28,7 | 20,0 |
| 17 | 15/16-20 UNEF | 30,8 | 19,3 | 19,2 | 20,3 | 35,7 | 30,4 | 21,5 |
| 19 | 1 1/16-18 UNEF | 34,1 | 22,3 | 19,6 | 20,8 | 39,7 | 32,0 | 23,0 |
| 21 | 1 3/16-18 UNEF | 37,3 | 25,8 | 20,4 | 21,7 | 42,2 | 33,6 | 25,0 |
| 23 | 1 5/16-18 UNEF | 41,0 | 28,3 | 20,8 | 22,0 | 45,2 | 35,1 | 26,0 |
| 25 | 1 7/16-18 UNEF | 43,7 | 31,5 | 21,7 | 22,9 | 48,2 | 36,6 | 28,0 |

TABLE 2

| ENTRY SIZE | ØG MIN | H LENGTH | J LENGTH | CABLE DIA RANGE |
|---|---|---|---|---|
| 05 | 7,9 | 60 | 40 | 4,5 – 9,0 |
| 08 | 12,7 | 60 | 40 | 6,0 – 12,0 |
| 10 | 15,8 | 72 | 48 | 7,5 – 15,0 |
| 12 | 19,0 | 72 | 48 | 9,0 – 18,0 |
| 16 | 25,4 | 95 | 55 | 10,0 – 25,0 |
| 20 | 31,8 | 125 | 70 | 12,5 – 30,0 |
| 24 | 38,1 | 125 | 70 | 15,0 – 36,0 |

TABLE 3

| CODE | FINISH |
|---|---|
| C | ELECTROLESS NICKEL |
| B | CADMIUM OLIVE DRAB OVER ELECTROLESS NICKEL |
| ZB | ZINC COBALT OLIVE DRAB OVER ELECTROLESS NICKEL |
| ZN | ZINC NICKEL BLACK PASSIVATE OVER ELECTROLESS NICKEL |

LIST NOT EXHAUSTIVE, SEE PLATING TABLE FOR OTHER OPTIONS

TAKF1-17-08-1-C-SB

SERIES
CONNECTOR INTERFACE
ANGLE
SHELL SIZE (TABLE 1)
ENTRY SIZE (TABLE 2)
MATERIAL
ALUMINIUM ALLOY
FINISH (TABLE 3)
UB - UNSCREENED BOOT
SB - SCREENED BOOT

TAK

**For tooling and assembly instructions see www.polamco.com**

Backshell supplied pre-terminated as a single part construction, with a Magna-Form braid tail and pre-installed Heat Shrink Boot.
Conductive adhesive ensures electrical continuity between cable screen and backshell braid tail.
Hot melt adhesive provides a sealed bond onto the cable jacket.

DRAWING NOT TO SCALE, DIMENSIONS IN MM

SEE PAGES 18-26 FOR COMPLETE LIST OF AVAILABLE MATERIALS, FINISHES AND CONNECTOR INTERFACES
(DIMENSIONS, FORM AND O RING SUBJECT TO CHANGE DEPENDING ON BACKSHELL MATERIAL AND CONNECTOR INTERFACE)

THIS DRAWING IS THE PROPERTY OF POLAMCO LTD AND MUST NOT BE USED FOR COMMERCIAL PURPOSES WITHOUT WRITTEN CONSENT OF THE COMPANY

# TAKF - Heat Shrink Backshell Kit

## Interface F - MIL-DTL-38999 SERIES II

Please note that TAK kits are not RoHS compliant

**Interconnect Solutions Worldwide**

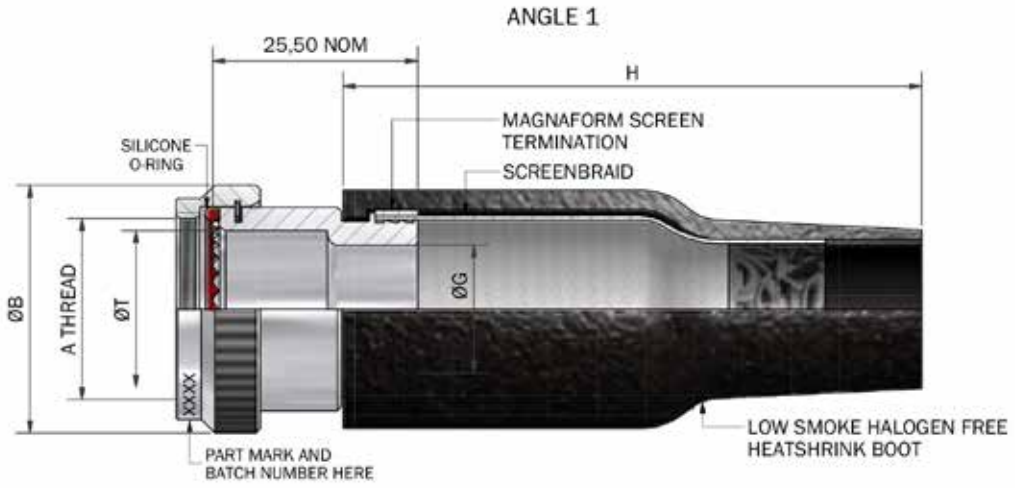


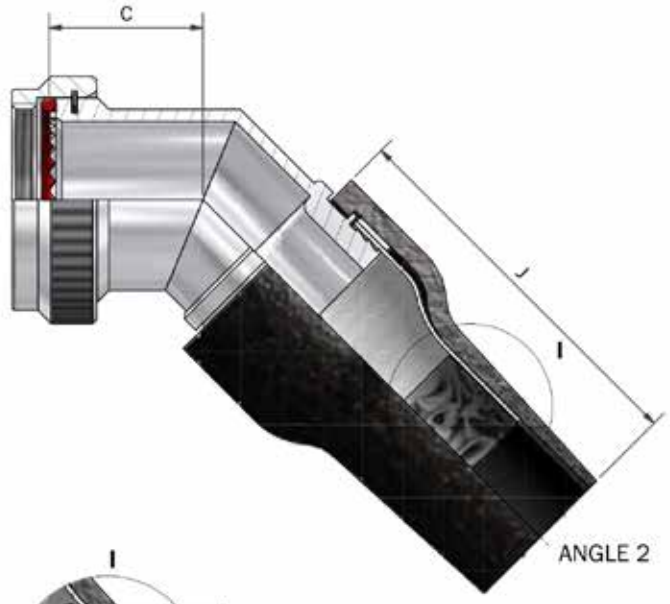


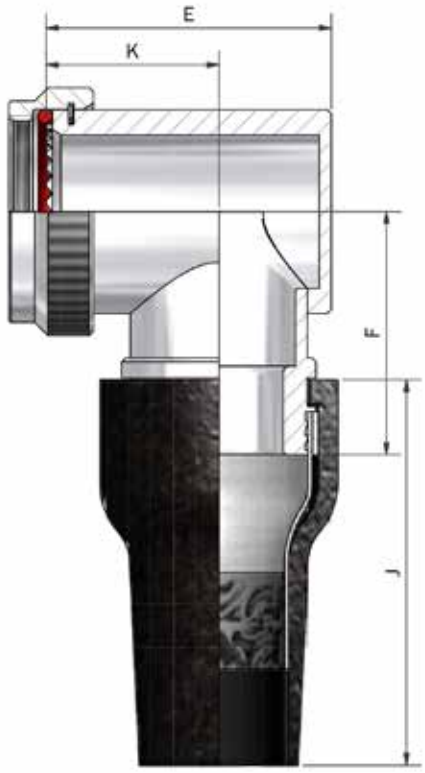


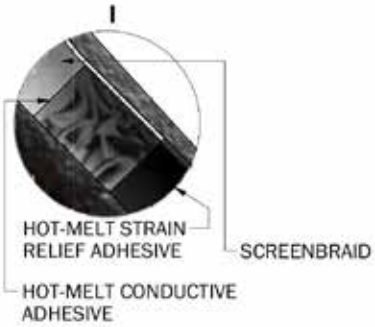


DRAWING NOT TO SCALE, DIMENSIONS IN MM

SEE PAGES 18-26 FOR COMPLETE LIST OF AVAILABLE MATERIALS, FINISHES AND CONNECTOR INTERFACES
(DIMENSIONS, FORM AND O RING SUBJECT TO CHANGE DEPENDING ON BACKSHELL MATERIAL AND CONNECTOR INTERFACE)



THIS DRAWING IS THE PROPERTY OF POLAMCO LTD AND MUST NOT BE USED FOR COMMERCIAL PURPOSES WITHOUT WRITTEN CONSENT OF THE COMPANY

# TAKF - Heat Shrink Backshell Kit

## Interface F - MIL-DTL-38999 SERIES II

Polamco

**Interconnect Solutions Worldwide**

TABLE 1

| SHELL SIZE | A THREAD | ØB MAX | ØT MIN | C ±0,5 | D ±0,5 | E MAX | F MAX | K ±0,5 |
|---|---|---|---|---|---|---|---|---|
| 08 | 7/16-28 UNEF | 18,3 | 6,6 | 16,4 | 17,1 | 22,7 | 24,0 | 15,0 |
| 10 | 9/16-24 UNEF | 21,5 | 10,1 | 17,2 | 18,2 | 26,2 | 25,7 | 17,0 |
| 12 | 11/16-24 UNEF | 24,5 | 12,9 | 17,6 | 18,6 | 29,2 | 27,2 | 18,0 |
| 14 | 13/16-20 UNEF | 27,8 | 16,1 | 18,5 | 19,5 | 32,2 | 28,7 | 20,0 |
| 16 | 15/16-20 UNEF | 30,8 | 19,3 | 20,2 | 20,3 | 35,7 | 30,4 | 21,5 |
| 18 | 1 1/16-18 UNEF | 34,1 | 21,7 | 19,6 | 20,8 | 39,7 | 32,0 | 23,0 |
| 20 | 1 3/16-18 UNEF | 37,3 | 24,9 | 20,4 | 21,7 | 42,2 | 33,6 | 25,0 |
| 22 | 1 5/16-18 UNEF | 40,5 | 28,1 | 20,8 | 22,0 | 45,2 | 35,1 | 26,0 |
| 24 | 1 7/16-18 UNEF | 43,7 | 31,3 | 21,7 | 22,9 | 48,2 | 36,6 | 28,0 |

TABLE 2

| ENTRY SIZE | ØG MIN | H LENGTH | J LENGTH | CABLE DIA RANGE |
|---|---|---|---|---|
| 05 | 7,9 | 60 | 40 | 4,5 – 9,0 |
| 08 | 12,7 | 60 | 40 | 6,0 – 12,0 |
| 10 | 15,8 | 72 | 48 | 7,5 – 15,0 |
| 12 | 19,0 | 72 | 48 | 9,0 – 18,0 |
| 16 | 25,4 | 95 | 55 | 10,0 – 25,0 |
| 20 | 31,8 | 125 | 70 | 12,5 – 30,0 |
| 24 | 38,1 | 125 | 70 | 15,0 – 36,0 |

TABLE 3

| CODE | FINISH |
|---|---|
| C | ELECTROLESS NICKEL |
| B | CADMIUM OLIVE DRAB OVER ELECTROLESS NICKEL |
| ZB | ZINC COBALT OLIVE DRAB OVER ELECTROLESS NICKEL |
| ZN | ZINC NICKEL BLACK PASSIVATE OVER ELECTROLESS NICKEL |

LIST NOT EXHAUSTIVE, SEE PLATING TABLE FOR OTHER OPTIONS

TAKF1-16-08-1-C-SB

SERIES
CONNECTOR INTERFACE
ANGLE
SHELL SIZE (TABLE 1)
ENTRY SIZE (TABLE 2)
MATERIAL
ALUMINIUM ALLOY
FINISH (TABLE 3)
UB - UNSCREENED BOOT
SB - SCREENED BOOT

**For tooling and assembly instructions see www.polamco.com**

Backshell supplied pre-terminated as a single part construction, with a Magna-Form braid tail and pre-installed Heat Shrink Boot.
Conductive adhesive ensures electrical continuity between cable screen and backshell braid tail.
Hot melt adhesive provides a sealed bond onto the cable jacket.

DRAWING NOT TO SCALE, DIMENSIONS IN MM

SEE PAGES 18-26 FOR COMPLETE LIST OF AVAILABLE MATERIALS, FINISHES AND CONNECTOR INTERFACES
(DIMENSIONS, FORM AND O RING SUBJECT TO CHANGE DEPENDING ON BACKSHELL MATERIAL AND CONNECTOR INTERFACE)

THIS DRAWING IS THE PROPERTY OF POLAMCO LTD AND MUST NOT BE USED FOR COMMERCIAL PURPOSES WITHOUT WRITTEN CONSENT OF THE COMPANY

# TAKH - Heat Shrink Backshell Kit

## Interface H - MIL-DTL-38999 SERIES III & IV

Please note that TAK kits are not RoHS compliant

**Interconnect Solutions Worldwide**

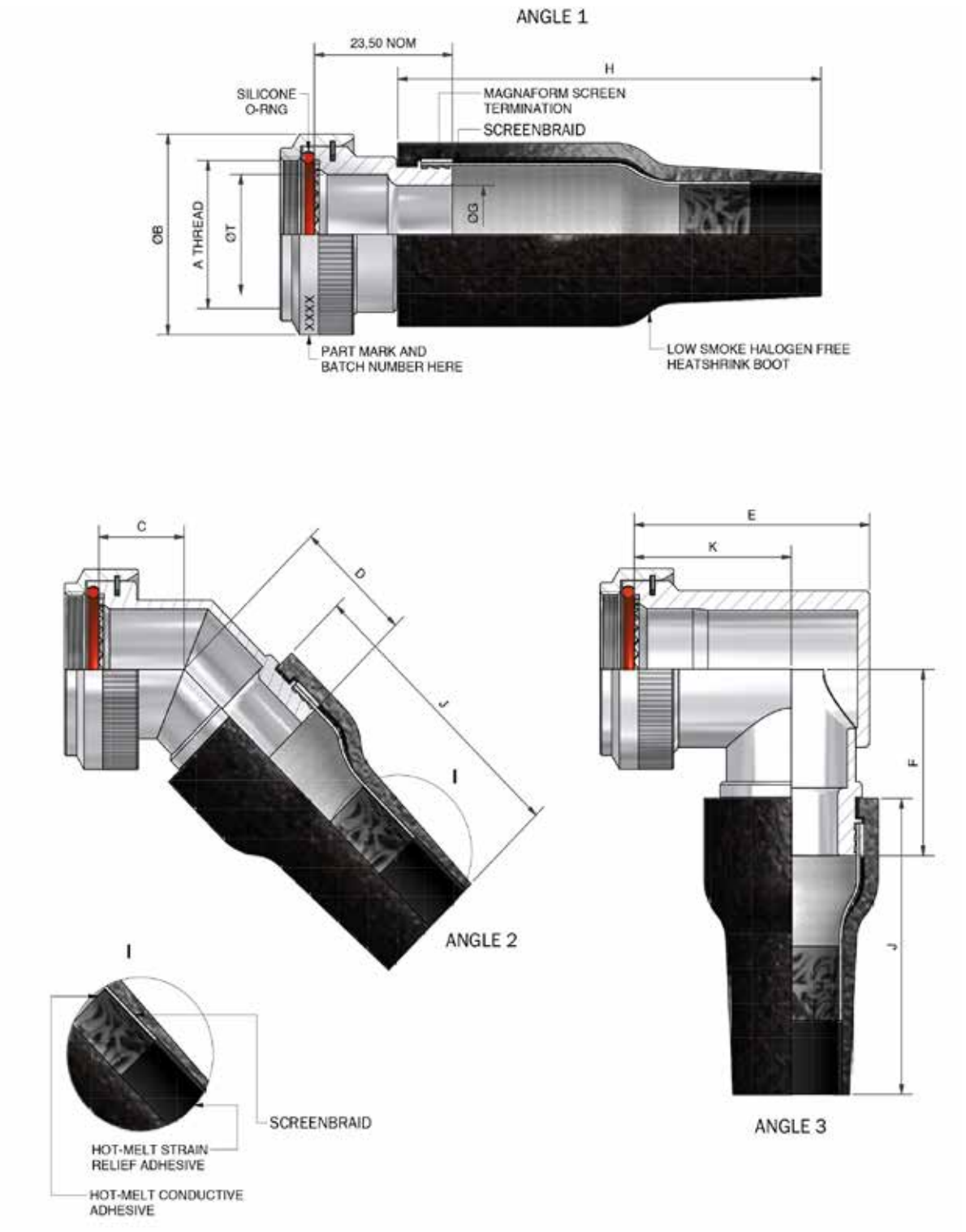


DRAWING NOT TO SCALE, DIMENSIONS IN MM

SEE PAGES 18-26 FOR COMPLETE LIST OF AVAILABLE MATERIALS, FINISHES AND CONNECTOR INTERFACES
(DIMENSIONS, FORM AND O RING SUBJECT TO CHANGE DEPENDING ON BACKSHELL MATERIAL AND CONNECTOR INTERFACE)





THIS DRAWING IS THE PROPERTY OF POLAMCO LTD AND MUST NOT BE USED FOR COMMERCIAL PURPOSES WITHOUT WRITTEN CONSENT OF THE COMPANY

# TAKH - Heat Shrink Backshell Kit

## Interface H - MIL-DTL-38999 SERIES III & IV

Polamco

**Interconnect Solutions Worldwide**

TABLE 1

| SHELL SIZE | A THREAD | ØB MAX | ØT MIN | C MAX | D ±0,5 | E MAX | F MAX | K ±0,5 |
|---|---|---|---|---|---|---|---|---|
| 09 | M12 x 1,0 | 18,0 | 6,7 | 13,1 | 17,1 | 25.7 | 24,0 | 17,5 |
| 11 | M15 x 1,0 | 21,0 | 10,2 | 13,9 | 18,2 | 26.7 | 25,7 | 17,5 |
| 13 | M18 x 1,0 | 24,5 | 13,5 | 14,5 | 18,6 | 31.2 | 27,2 | 20,0 |
| 15 | M22 x 1,0 | 27,5 | 16,2 | 15,5 | 19,5 | 37.2 | 28,7 | 24,5 |
| 17 | M25 x 1,0 | 31,0 | 19,4 | 16,1 | 20,3 | 40.2 | 30,4 | 26,7 |
| 19 | M28 x 1,0 | 34,0 | 21,8 | 16,8 | 20,8 | 44.7 | 32,0 | 27,0 |
| 21 | M31 x 1,0 | 37,0 | 25,1 | 17,1 | 21,7 | 49.2 | 33,6 | 30,5 |
| 23 | M34 x 1,0 | 40,0 | 28,2 | 17,7 | 22,0 | 51.7 | 35,1 | 31,5 |
| 25 | M37 x 1,0 | 43,5 | 31,4 | 18,4 | 22,9 | 53.2 | 36,6 | 28,5 |

TABLE 2

| ENTRY SIZE | ØG MIN | H LENGTH | J LENGTH | CABLE DIA RANGE |
|---|---|---|---|---|
| 05 | 7,9 | 60 | 40 | 4,5 – 9,0 |
| 08 | 12,7 | 60 | 40 | 6,0 – 12,0 |
| 10 | 15,8 | 72 | 48 | 7,5 – 15,0 |
| 12 | 19,0 | 72 | 48 | 9,0 – 18,0 |
| 16 | 25,4 | 95 | 55 | 10,0 – 25,0 |
| 20 | 31,8 | 125 | 70 | 12,5 – 30,0 |
| 24 | 38,1 | 125 | 70 | 15,0 – 36,0 |

TABLE 3

| CODE | FINISH |
|---|---|
| C | ELECTROLESS NICKEL |
| B | CADMIUM OLIVE DRAB OVER ELECTROLESS NICKEL |
| ZB | ZINC COBALT OLIVE DRAB OVER ELECTROLESS NICKEL |
| ZN | ZINC NICKEL BLACK PASSIVATE OVER ELECTROLESS NICKEL |

LIST NOT EXHAUSTIVE, SEE PLATING TABLE FOR OTHER OPTIONS

TAKH1-17-08-1-C-SB

SERIES
CONNECTOR INTERFACE
ANGLE
SHELL SIZE (TABLE 1)
ENTRY SIZE (TABLE 2)
MATERIAL
ALUMINIUM ALLOY
FINISH (TABLE 3)
UB - UNSCREENED BOOT
SB - SCREENED BOOT

TAK

**For tooling and assembly instructions see www.polamco.com**

Backshell supplied pre-terminated as a single part construction, with a Magna-Form braid tail and pre-installed Heat Shrink Boot.
Conductive adhesive ensures electrical continuity between cable screen and backshell braid tail.
Hot melt adhesive provides a sealed bond onto the cable jacket.

DRAWING NOT TO SCALE, DIMENSIONS IN MM

SEE PAGES 18-26 FOR COMPLETE LIST OF AVAILABLE MATERIALS, FINISHES AND CONNECTOR INTERFACES
(DIMENSIONS, FORM AND O RING SUBJECT TO CHANGE DEPENDING ON BACKSHELL MATERIAL AND CONNECTOR INTERFACE)

THIS DRAWING IS THE PROPERTY OF POLAMCO LTD AND MUST NOT BE USED FOR COMMERCIAL PURPOSES WITHOUT WRITTEN CONSENT OF THE COMPANY

# TAK (SS) - Heat Shrink Backshell Kit Stainless Steel

## Interface H - MIL-DTL-38999 SERIES III & IV

Please note that TAK kits are not RoHS compliant

Polamco

**Interconnect Solutions Worldwide**

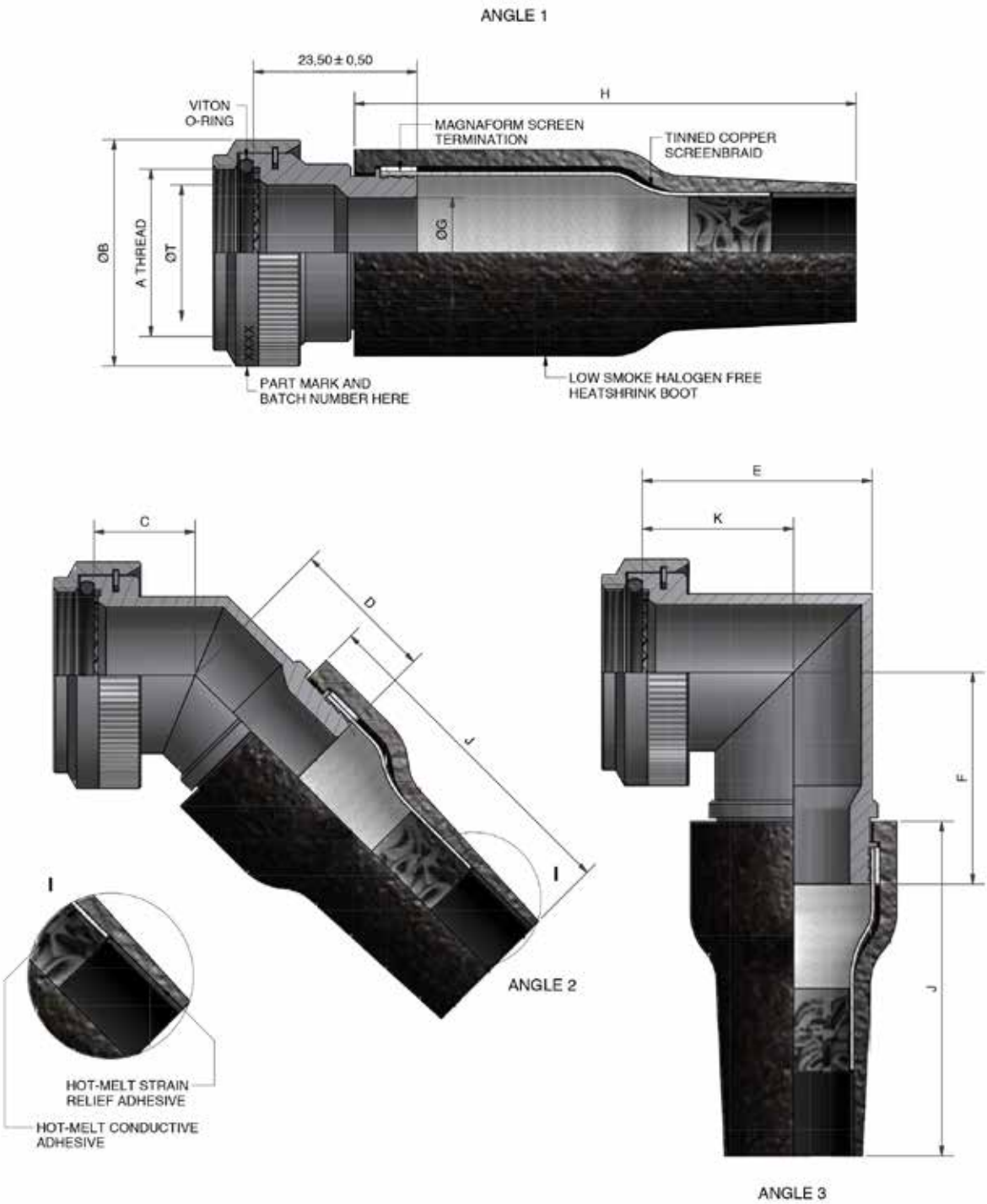


DRAWING NOT TO SCALE, DIMENSIONS IN MM

SEE PAGES 18-26 FOR COMPLETE LIST OF AVAILABLE MATERIALS, FINISHES AND CONNECTOR INTERFACES
(DIMENSIONS, FORM AND O RING SUBJECT TO CHANGE DEPENDING ON BACKSHELL MATERIAL AND CONNECTOR INTERFACE)



THIS DRAWING IS THE PROPERTY OF POLAMCO LTD AND MUST NOT BE USED FOR COMMERCIAL PURPOSES WITHOUT WRITTEN CONSENT OF THE COMPANY

# TAK (SS) - Heat Shrink Backshell Kit Stainless Steel

## Interface H - MIL-DTL-38999 SERIES III & IV

Polamco

**Interconnect Solutions Worldwide**

TABLE 1

| SHELL SIZE | A THREAD | ØB MAX | ØT MIN | C MAX | D ±0,5 | E MAX | F MAX | K ±0,5 |
|---|---|---|---|---|---|---|---|---|
| 09 | M12x1.0 | 18,0 | 6,7 | 13,1 | 17,1 | 21,5 | 24,0 | 16,3 |
| 11 | M15x1.0 | 21,0 | 10,2 | 13,9 | 18,2 | 24,6 | 25,7 | 17,2 |
| 13 | M18x1.0 | 24,5 | 13,5 | 14,5 | 18,6 | 28,6 | 27,2 | 19,4 |
| 15 | M22x1.0 | 27,5 | 16,2 | 15,5 | 19,5 | 31,3 | 28,7 | 21,0 |
| 17 | M25x1.0 | 31,0 | 19,4 | 16,1 | 20,3 | 34,5 | 30,4 | 22,8 |
| 19 | M28x1.0 | 34,0 | 21,8 | 16,8 | 20,8 | 38,7 | 32,0 | 25,3 |
| 21 | M31x1.0 | 37,0 | 25,1 | 17,1 | 21,7 | 41,0 | 33,6 | 26,1 |
| 23 | M34x1.0 | 40,0 | 28,2 | 17,7 | 22,0 | 43,9 | 35,1 | 27,6 |
| 25 | M37x1.0 | 43,5 | 31,4 | 18,4 | 22,9 | 46,7 | 36,6 | 29,1 |

TABLE 2

| ENTRY SIZE | ØG | H LENGTH | J LENGTH | CABLE DIA RANGE |
|---|---|---|---|---|
| 05 | 7,9 | 60 | 40 | 4,5-9,0 |
| 08 | 12,7 | 60 | 40 | 6,0-12,0 |
| 10 | 15,8 | 72 | 48 | 7,5-15,0 |
| 12 | 19,0 | 72 | 48 | 9,0-18,0 |
| 16 | 25,4 | 95 | 55 | 10,0-25,0 |
| 20 | 31,8 | 125 | 70 | 12,5-30,0 |
| 24 | 38,1 | 125 | 70 | 15,0-36,0 |

TABLE 3

| CODE | MATERIAL / FINISH |
|---|---|
| 4-J | STAINLESS STEEL 303S31 / PASSIVATE |
| 46-J | STAINLESS STEEL 316 / PASSIVATE |

LIST NOT EXHAUSTIVE, SEE PLATING TABLE FOR OTHER OPTIONS

TAKH1-17-08-4-J-UB

SERIES
CONNECTOR INTERFACE
ANGLE
SHELL SIZE (TABLE 1)
ENTRY SIZE (TABLE 2)
MATERIAL (TABLE 3)
FINISH (TABLE 3)
UB - UNSCREENED BOOT
SB - SCREENED BOOT

TAK

**For tooling and assembly instructions see www.polamco.com**

Backshell supplied pre-terminated as a single part construction, with a Magna-Form braid tail and pre-installed Heat Shrink Boot.
Conductive adhesive ensures electrical continuity between cable screen and backshell braid tail.
Hot melt adhesive provides a sealed bond onto the cable jacket.

DRAWING NOT TO SCALE, DIMENSIONS IN MM

SEE PAGES 18-26 FOR COMPLETE LIST OF AVAILABLE MATERIALS, FINISHES AND CONNECTOR INTERFACES
(DIMENSIONS, FORM AND O RING SUBJECT TO CHANGE DEPENDING ON BACKSHELL MATERIAL AND CONNECTOR INTERFACE)

THIS DRAWING IS THE PROPERTY OF POLAMCO LTD AND MUST NOT BE USED FOR COMMERCIAL PURPOSES WITHOUT WRITTEN CONSENT OF THE COMPANY

# TAK (NB) - Heat Shrink Backshell Kit
# Nickel Aluminium Bronze

## Interface H - MIL-DTL-38999 SERIES III & IV

Please note that TAK kits are not RoHS compliant

Polamco

**Interconnect Solutions Worldwide**

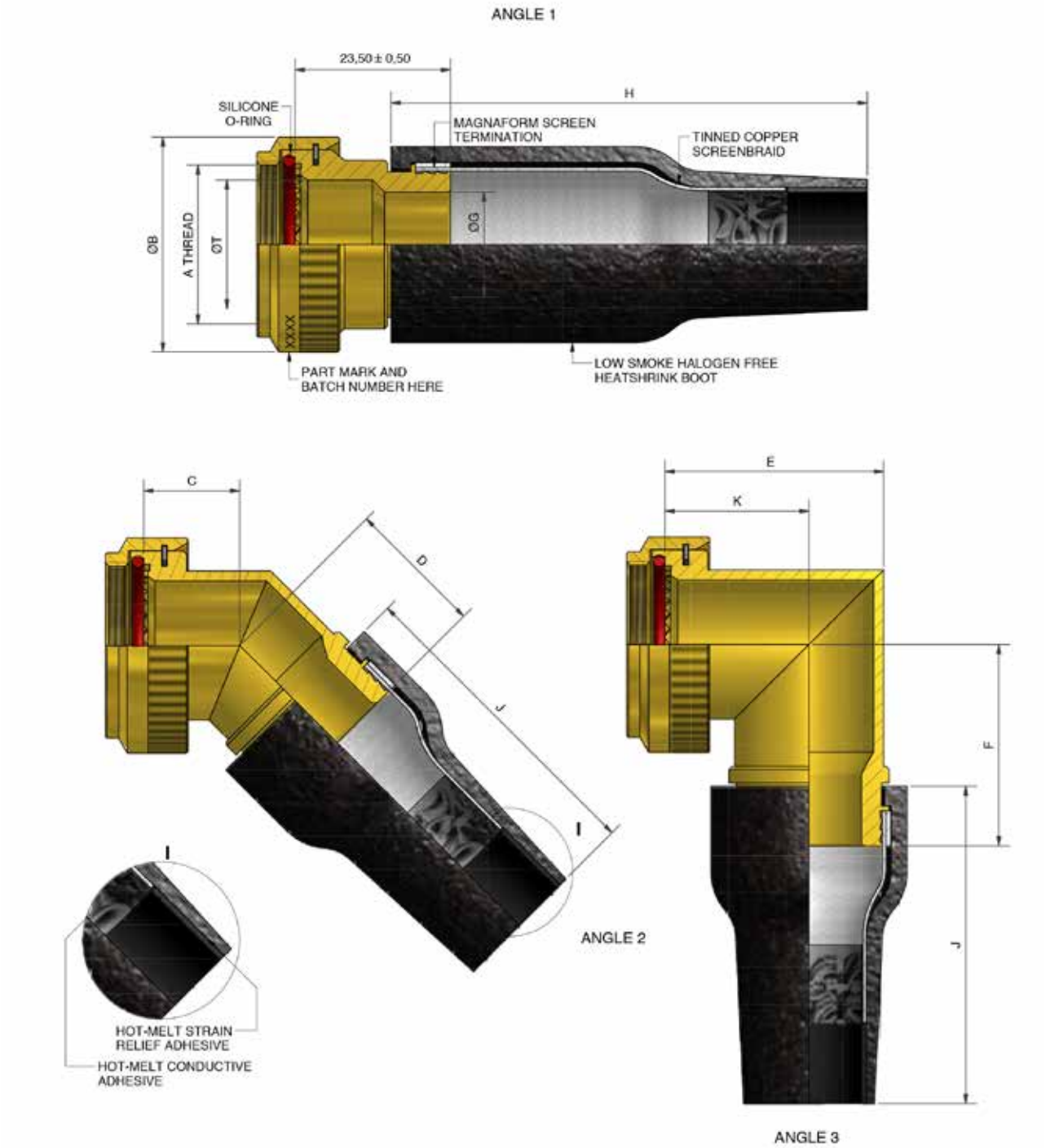


DRAWING NOT TO SCALE, DIMENSIONS IN MM

SEE PAGES 18-26 FOR COMPLETE LIST OF AVAILABLE MATERIALS, FINISHES AND CONNECTOR INTERFACES
(DIMENSIONS, FORM AND O RING SUBJECT TO CHANGE DEPENDING ON BACKSHELL MATERIAL AND CONNECTOR INTERFACE)



THIS DRAWING IS THE PROPERTY OF POLAMCO LTD AND MUST NOT BE USED FOR COMMERCIAL PURPOSES WITHOUT WRITTEN CONSENT OF THE COMPANY

# TAK (NB) - Heat Shrink Backshell Kit
# Nickel Aluminium Bronze

## Interface H - MIL-DTL-38999 SERIES III & IV

Polamco

**Interconnect Solutions Worldwide**

TABLE 1

| SHELL SIZE | A THREAD | ØB MAX | ØT MIN | C MAX | D ±0,5 | E MAX | F MAX | K ±0,5 |
|---|---|---|---|---|---|---|---|---|
| 09 | M12x1.0 | 18,0 | 6,7 | 13,1 | 17,1 | 21,5 | 24,0 | 16,3 |
| 11 | M15x1.0 | 21,0 | 10,2 | 13,9 | 18,2 | 24,6 | 25,7 | 17,2 |
| 13 | M18x1.0 | 24,5 | 13,5 | 14,5 | 18,6 | 28,6 | 27,2 | 19,4 |
| 15 | M22x1.0 | 27,5 | 16,2 | 15,5 | 19,5 | 31,3 | 28,7 | 21,0 |
| 17 | M25x1.0 | 31,0 | 19,4 | 16,1 | 20,3 | 34,5 | 30,4 | 22,8 |
| 19 | M28x1.0 | 34,0 | 21,8 | 16,8 | 20,8 | 38,7 | 32,0 | 25,3 |
| 21 | M31x1.0 | 37,0 | 25,1 | 17,1 | 21,7 | 41,0 | 33,6 | 26,1 |
| 23 | M34x1.0 | 40,0 | 28,2 | 17,7 | 22,0 | 43,9 | 35,1 | 27,6 |
| 25 | M37x1.0 | 43,5 | 31,4 | 18,4 | 22,9 | 46,7 | 36,6 | 29,1 |

TABLE 2

| ENTRY SIZE | ØG | H LENGTH | J LENGTH | CABLE DIA RANGE |
|---|---|---|---|---|
| 05 | 7,9 | 60 | 40 | 4,5-9,0 |
| 08 | 12,7 | 60 | 40 | 6,0-12,0 |
| 10 | 15,8 | 72 | 48 | 7,5-15,0 |
| 12 | 19,0 | 72 | 48 | 9,0-18,0 |
| 16 | 25,4 | 95 | 55 | 10,0-25,0 |
| 20 | 31,8 | 125 | 70 | 12,5-30,0 |
| 24 | 38,1 | 125 | 70 | 15,0-36,0 |

TAKH1-17-08-2-Z-UB

SERIES
CONNECTOR INTERFACE
ANGLE
SHELL SIZE (TABLE 1)
ENTRY SIZE (TABLE 2)
MATERIAL
NICKEL ALUMINIUM BRONZE
FINISH
SHOT BLAST
UB - UNSCREENED BOOT
SB - SCREENED BOOT

**For tooling and assembly instructions see www.polamco.com**

Backshell supplied pre-terminated as a single part construction, with a Magna-Form braid tail and pre-installed Heat Shrink Boot.
Conductive adhesive ensures electrical continuity between cable screen and backshell braid tail.
Hot melt adhesive provides a sealed bond onto the cable jacket.

DRAWING NOT TO SCALE, DIMENSIONS IN MM

SEE PAGES 18-26 FOR COMPLETE LIST OF AVAILABLE MATERIALS, FINISHES AND CONNECTOR INTERFACES
(DIMENSIONS, FORM AND O RING SUBJECT TO CHANGE DEPENDING ON BACKSHELL MATERIAL AND CONNECTOR INTERFACE)

THIS DRAWING IS THE PROPERTY OF POLAMCO LTD AND MUST NOT BE USED FOR COMMERCIAL PURPOSES WITHOUT WRITTEN CONSENT OF THE COMPANY

# Section Index


8 Backshell Product Finder

16 Product Information

29 Screened Backshells

275 Non-Screened Backshells

323 Conduit Backshells & Conduit

333 Thread Adaptors & Extenders

1 Associated Products

356 Glossary & Terms

# Non-Screened Backshells

Polamco design and manufacture the following Non-Screened Backshells:

## Non Screened

96 Series
77 Series
37 Series
86 Series
97 Series
76 Series
VG Series
98 Series

## Characteristics

- All parts machined from solid material for reliable strength and performance
- Available in all materials and straight, 45° or 90° options
- Compatible with MIL-Spec dimensions and performance
- Options to use Heat Shrink Boots

96 Series

97 Series

# 96F - Cable Clamp Backshell

## Interface F - MIL-DTL-38999 SERIES I & II

Polamco

**Interconnect Solutions Worldwide**

STRAIN RELIEF

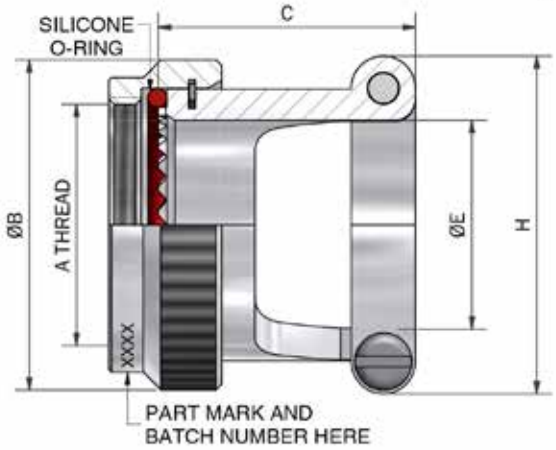


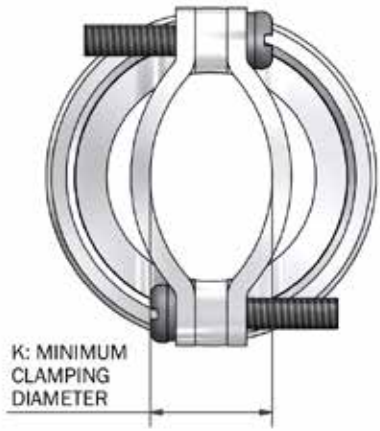


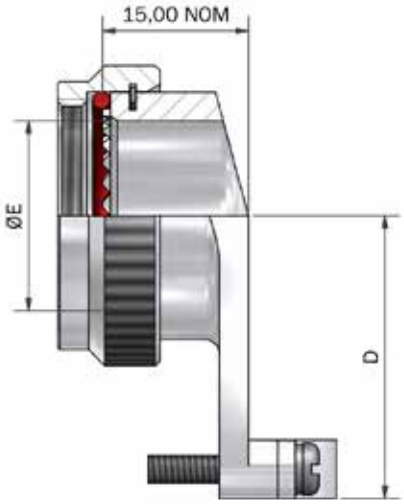


ANGLE 3

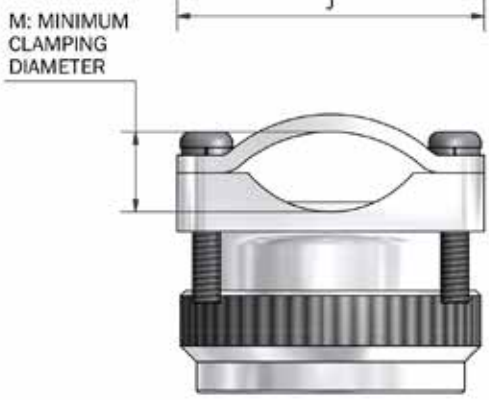


NOTE
FASTENERS MATERIAL (STAINLESS STEEL)

DRAWING NOT TO SCALE, DIMENSIONS IN MM

See pages 18-26 for complete list of available materials, finishes and Connector interfaces
(dimensions, form and O Ring subject to change depending on Backshell material and Connector interface)



THIS DRAWING IS THE PROPERTY OF POLAMCO LTD AND MUST NOT BE USED FOR COMMERCIAL PURPOSES WITHOUT WRITTEN CONSENT OF THE COMPANY

# 96F - Cable Clamp Backshell

## Interface F - MIL-DTL-38999 SERIES I & II

Polamco

**Interconnect Solutions Worldwide**

STRAIN RELIEF

TABLE 1

| DASH NO. | SHELL SIZE SERIES I | SHELL SIZE SERIES II | A THREAD | ØB MAX | C MAX | D MAX | ØE MIN | H MAX | J MAX | K ±0,5 CLAMPING DIAMETER | M ±0,5 CLAMPING DIAMETER |
|---|---|---|---|---|---|---|---|---|---|---|---|
| 08 | 09 | 08 | 7/16-28 UNEF | 18,3 | 21,5 | 18,8 | 6,7 | 19,0 | 19,0 | 5,7 | 4,7 |
| 10 | 11 | 10 | 9/16-24 UNEF | 21,5 | 21,5 | 21,1 | 10,1 | 22,2 | 22,2 | 6,9 | 5,3 |
| 12 | 13 | 12 | 11/16-24 UNEF | 24,5 | 23,5 | 23,1 | 13,0 | 25,2 | 25,2 | 8,5 | 5,8 |
| 14 | 15 | 14 | 13/16-20 UNEF | 27,8 | 23,5 | 25,5 | 16,1 | 28,5 | 28,5 | 10,4 | 7,7 |
| 16 | 17 | 16 | 15/16-20 UNEF | 30,8 | 24,5 | 29,1 | 19,3 | 31,7 | 31,7 | 11,4 | 8,2 |
| 18 | 19 | 18 | 1 1/16-18 UNEF | 34,1 | 27,5 | 35,1 | 21,8 | 34,9 | 34,9 | 14,9 | 9,7 |
| 20 | 21 | 20 | 1 3/16-18 UNEF | 37,3 | 34,5 | 37,7 | 25,2 | 38,0 | 38,0 | 16,8 | 10,7 |
| 22 | 23 | 22 | 1 5/16-18 UNEF | 40,5 | 34,5 | 39,8 | 28,1 | 42,8 | 41,2 | 23,9 | 11,8 |
| 24 | 25 | 24 | 1 7/16-18 UNEF | 43,7 | 34,5 | 42,0 | 31,3 | 46,0 | 44,4 | 22,8 | 12,7 |

TABLE 2

| CODE | FINISH |
|---|---|
| C | ELECTROLESS NICKEL |
| B | CADMIUM OLIVE DRAB OVER ELECTROLESS NICKEL |
| ZB | ZINC COBALT OLIVE DRAB OVER ELECTROLESS NICKEL |
| ZN | ZINC NICKEL BLACK PASSIVATE OVER ELECTROLESS NICKEL |
| G | BLACK ANODISE, SULPHURIC |

LIST NOT EXHAUSTIVE, SEE PLATING TABLE FOR OTHER OPTIONS

96F1-16-1-C

SERIES
CONNECTOR INTERFACE
ANGLE
DASH NO. (TABLE 1)
MATERIAL
ALUMINIUM ALLOY
FINISH (TABLE 2)

DRAWING NOT TO SCALE, DIMENSIONS IN MM

See pages 18-26 for complete list of available materials, finishes and Connector interfaces
(dimensions, form and O Ring subject to change depending on Backshell material and Connector interface)

THIS DRAWING IS THE PROPERTY OF POLAMCO LTD AND MUST NOT BE USED FOR COMMERCIAL PURPOSES WITHOUT WRITTEN CONSENT OF THE COMPANY

# 96H - Cable Clamp Backshell

## Interface H - MIL-DTL-38999 SERIES III & IV

Polamco

**Interconnect Solutions Worldwide**

STRAIN RELIEF

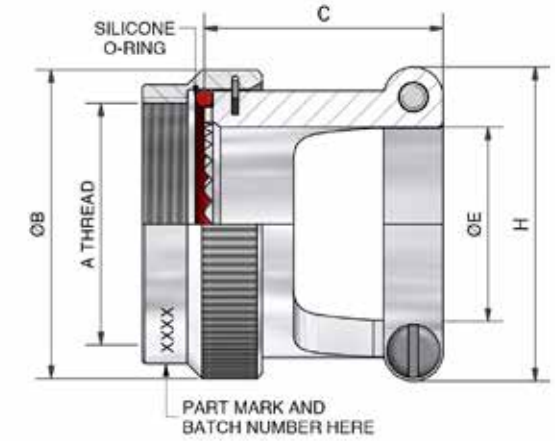


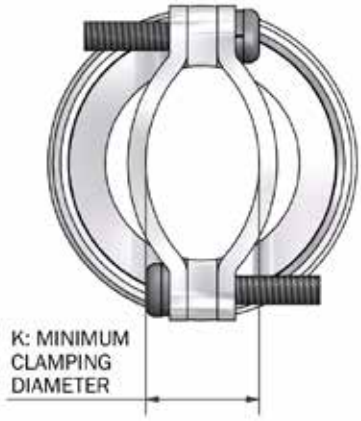


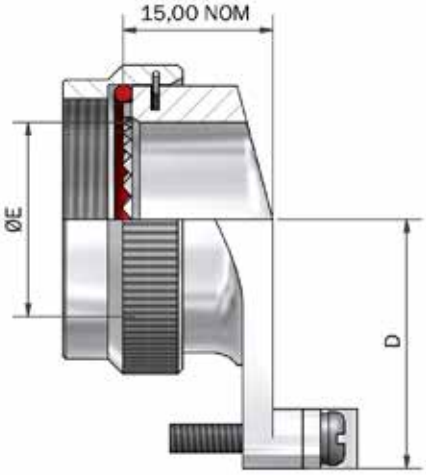


ANGLE 3

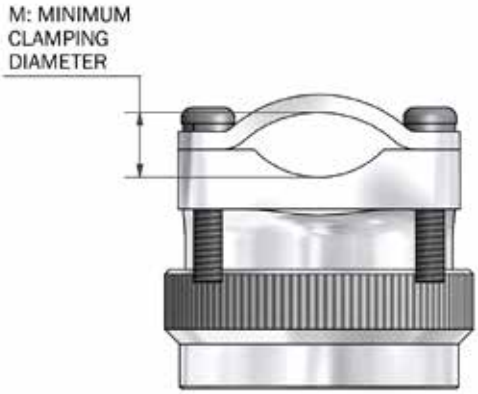


DRAWING NOT TO SCALE, DIMENSIONS IN MM

See pages 18-26 for complete list of available materials, finishes and Connector interfaces
(dimensions, form and O Ring subject to change depending on Backshell material and Connector interface)



THIS DRAWING IS THE PROPERTY OF POLAMCO LTD AND MUST NOT BE USED FOR COMMERCIAL PURPOSES WITHOUT WRITTEN CONSENT OF THE COMPANY

# 96H - Cable Clamp Backshell

## Interface H - MIL-DTL-38999 SERIES III & IV

Polamco

**Interconnect Solutions Worldwide**



TABLE 1

| SHELL SIZE | A THREAD | ØB MAX | C MAX | D MAX | ØE MIN | H MAX | J MAX | K ±0,5 CLAMPING DIAMETER | M ±0,5 CLAMPING DIAMETER |
|---|---|---|---|---|---|---|---|---|---|
| 09 | M12 x 1.0 | 18,0 | 21,5 | 20,4 | 6,7 | 19,0 | 20,6 | 5,7 | 5,2 |
| 11 | M15 x 1.0 | 21,0 | 21,5 | 21,4 | 10,1 | 22,2 | 22,2 | 6,9 | 5,2 |
| 13 | M18 x 1.0 | 24,5 | 23,5 | 22,4 | 13,0 | 25,2 | 23,7 | 8,5 | 5,6 |
| 15 | M22 x 1.0 | 27,5 | 23,5 | 23,4 | 16,1 | 28,5 | 26,9 | 10,4 | 6,4 |
| 17 | M25 x 1.0 | 31,0 | 24,5 | 25,4 | 19,3 | 31,7 | 28,5 | 11,4 | 6,5 |
| 19 | M28 x 1.0 | 34,0 | 27,5 | 27,9 | 21,8 | 34,9 | 31,7 | 14,9 | 7,0 |
| 21 | M31 x 1.0 | 37,0 | 34,5 | 31,9 | 25,2 | 38,0 | 34,9 | 16,8 | 8,5 |
| 23 | M34 x 1.0 | 40,0 | 37,5 | 35,4 | 28,1 | 42,8 | 38,0 | 23,9 | 9,4 |
| 25 | M37 x 1.0 | 43,5 | 37,5 | 36,4 | 31,3 | 46,0 | 38,0 | 22,8 | 9,4 |

TABLE 2

| CODE | FINISH |
|---|---|
| C | ELECTROLESS NICKEL |
| B | CADMIUM OLIVE DRAB OVER ELECTROLESS NICKEL |
| ZB | ZINC COBALT OLIVE DRAB OVER ELECTROLESS NICKEL |
| ZN | ZINC NICKEL BLACK PASSIVATE OVER ELECTROLESS NICKEL |
| G | BLACK ANODISE, SULPHURIC |

LIST NOT EXHAUSTIVE, SEE PLATING TABLE FOR OTHER OPTIONS

96H1-17-1-C

SERIES
CONNECTOR INTERFACE
ANGLE
SHELL SIZE (TABLE 1)
MATERIAL
ALUMINIUM ALLOY
FINISH (TABLE 2)

DRAWING NOT TO SCALE, DIMENSIONS IN MM

See pages 18-26 for complete list of available materials, finishes and Connector interfaces
(dimensions, form and O Ring subject to change depending on Backshell material and Connector interface)

THIS DRAWING IS THE PROPERTY OF POLAMCO LTD AND MUST NOT BE USED FOR COMMERCIAL PURPOSES WITHOUT WRITTEN CONSENT OF THE COMPANY

# 96H (SS) - Cable Clamp Backshell Stainless Steel

## Interface H - MIL-DTL-38999 SERIES III & IV

Polamco

**Interconnect Solutions Worldwide**

STRAIN RELIEF

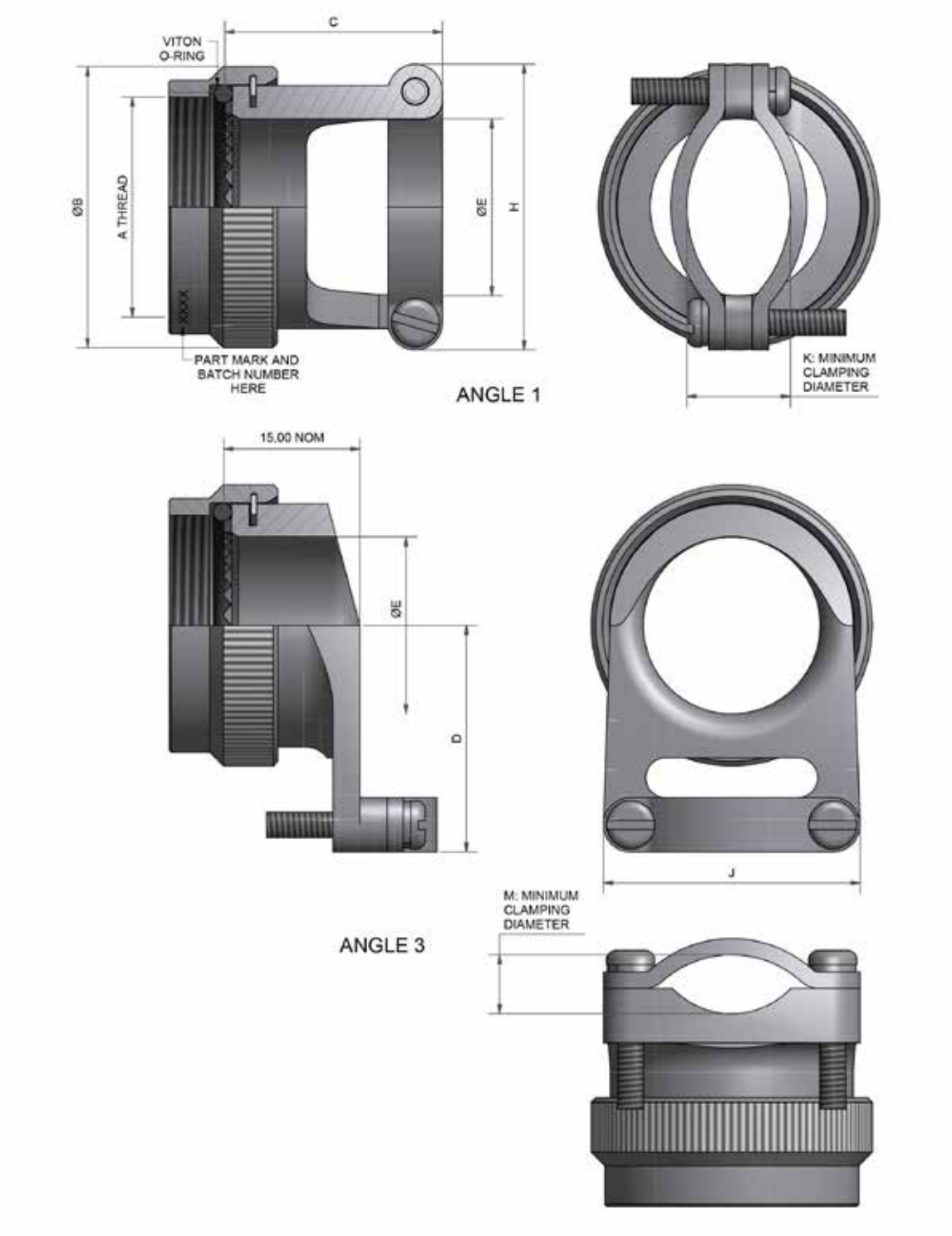


DRAWING NOT TO SCALE, DIMENSIONS IN MM

See pages 18-26 for complete list of available materials, finishes and Connector interfaces
(dimensions, form and O Ring subject to change depending on Backshell material and Connector interface)



THIS DRAWING IS THE PROPERTY OF POLAMCO LTD AND MUST NOT BE USED FOR COMMERCIAL PURPOSES WITHOUT WRITTEN CONSENT OF THE COMPANY

# 96H (SS) - Cable Clamp Backshell Stainless Steel

## Interface H - MIL-DTL-38999 SERIES III & IV

Polamco

**Interconnect Solutions Worldwide**



TABLE 1

| SHELL SIZE | A THREAD | ØB MAX | ØE MIN | C ±0,25 | D MAX | H MAX | J MAX | K ±0,5 | M ±0,5 |
|---|---|---|---|---|---|---|---|---|---|
| 09 | M12 x 1,0 | 18,0 | 6,6 | 21,0 | 20,5 | 19,0 | 20,6 | 5,7 | 5,4 |
| 11 | M15 x 1,0 | 21,0 | 10,1 | 21,0 | 21,5 | 22,2 | 22,2 | 6,9 | 5,5 |
| 13 | M18 x 1,0 | 24,5 | 13,0 | 23,0 | 22,5 | 25,2 | 23,7 | 8,5 | 5,8 |
| 15 | M22 x 1,0 | 27,5 | 16,1 | 23,0 | 23,5 | 28,5 | 26,9 | 10,4 | 6,6 |
| 17 | M25 x 1,0 | 31,0 | 19,3 | 24,0 | 25,5 | 31,7 | 28,5 | 11,4 | 6,7 |
| 19 | M28 x 1,0 | 34,0 | 21,8 | 27,0 | 28,0 | 34,9 | 31,7 | 14,9 | 7,2 |
| 21 | M31 x 1,0 | 37,0 | 25,2 | 34,0 | 31,8 | 38,0 | 34,9 | 16,8 | 8,7 |
| 23 | M34 x 1,0 | 40,0 | 28,1 | 37,0 | 33,3 | 42,8 | 38,0 | 23,9 | 9,7 |
| 25 | M37 x 1,0 | 43,5 | 31,3 | 37,0 | 33,3 | 46,0 | 38,0 | 22,8 | 9,7 |

TABLE 2

| CODE | MATERIAL / FINISH |
|---|---|
| 4-J | STAINLESS STEEL 303S31 / PASSIVATE |
| 46-J | STAINLESS STEEL 316 / PASSIVATE |

LIST NOT EXHAUSTIVE, SEE PLATING TABLE FOR OTHER OPTIONS

96H1-17-4-J

- SERIES
- CONNECTOR INTERFACE
- ANGLE
- SHELL SIZE (TABLE 1)
- MATERIAL (TABLE 2)
- FINISH (TABLE 2)

DRAWING NOT TO SCALE, DIMENSIONS IN MM

See pages 18-26 for complete list of available materials, finishes and Connector interfaces
(dimensions, form and O Ring subject to change depending on Backshell material and Connector interface)

THIS DRAWING IS THE PROPERTY OF POLAMCO LTD AND MUST NOT BE USED FOR COMMERCIAL PURPOSES WITHOUT WRITTEN CONSENT OF THE COMPANY

# 96H (NB) - Cable Clamp Backshell
# Nickel Aluminium Bronze

## Interface H - MIL-DTL-38999 SERIES III & IV

Polamco

**Interconnect Solutions Worldwide**

STRAIN RELIEF

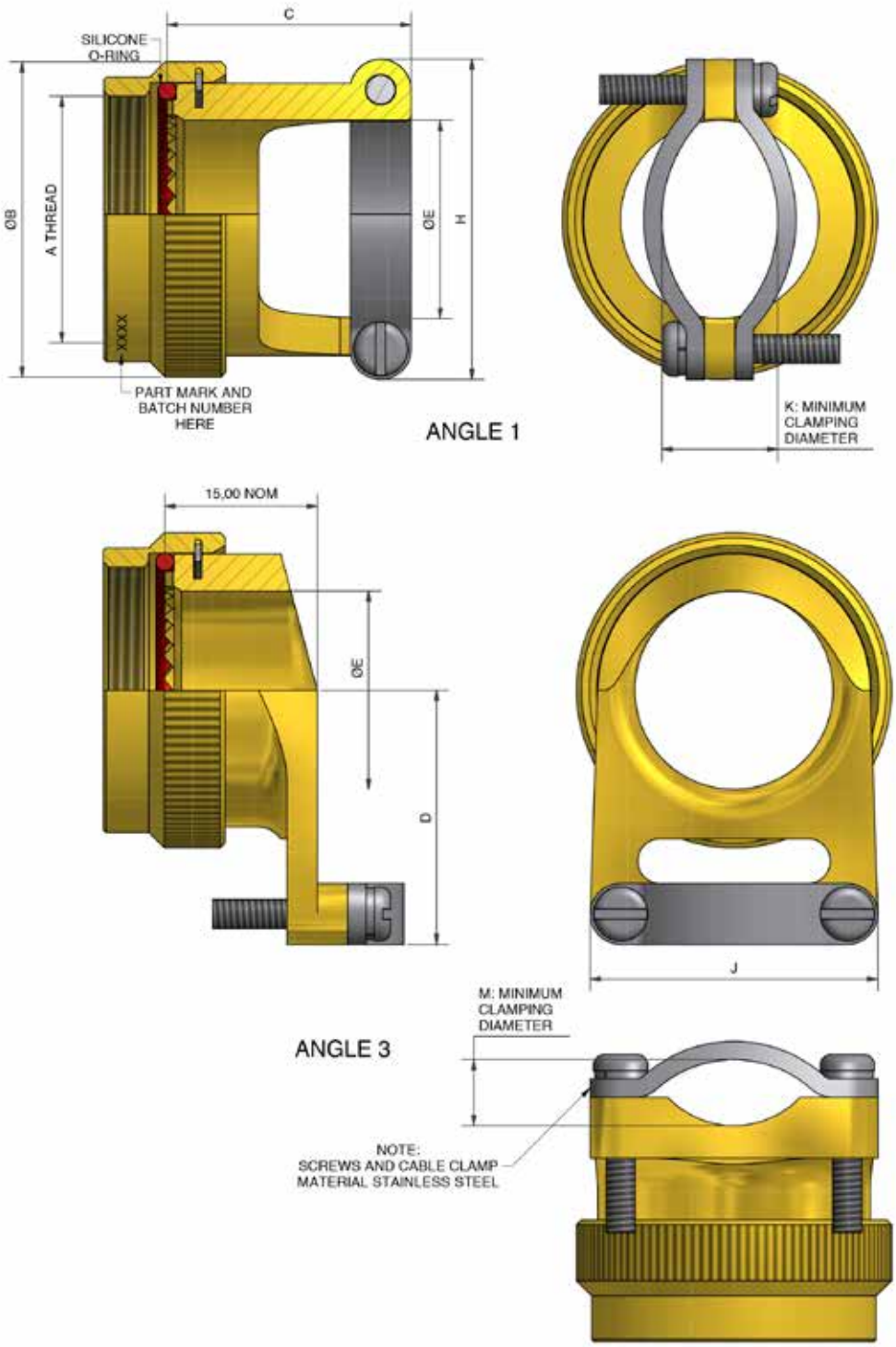


DRAWING NOT TO SCALE, DIMENSIONS IN MM

See pages 18-26 for complete list of available materials, finishes and Connector interfaces
(dimensions, form and O Ring subject to change depending on Backshell material and Connector interface)



THIS DRAWING IS THE PROPERTY OF POLAMCO LTD AND MUST NOT BE USED FOR COMMERCIAL PURPOSES WITHOUT WRITTEN CONSENT OF THE COMPANY

# 96H (NB) - Cable Clamp Backshell
# Nickel Aluminium Bronze

## Interface H - MIL-DTL-38999 SERIES III & IV

Polamco

**Interconnect Solutions Worldwide**



TABLE 1

| SHELL SIZE | A THREAD | ØB MAX | ØE MIN | C MAX | D MAX | H MAX | J MAX | K ±0,5 | M ±0,5 |
|---|---|---|---|---|---|---|---|---|---|
| 09 | M12 x 1,0 | 18,0 | 6,6 | 21,0 | 20,3 | 19,0 | 20,6 | 5,7 | 5,4 |
| 11 | M15 x 1,0 | 21,0 | 10,1 | 21,0 | 22,1 | 22,2 | 22,2 | 6,9 | 5,5 |
| 13 | M18 x 1,0 | 24,5 | 13,0 | 23,0 | 23,6 | 25,2 | 23,7 | 8,5 | 5,8 |
| 15 | M22 x 1,0 | 27,5 | 16,1 | 23,0 | 25,4 | 28,5 | 26,9 | 10,4 | 6,6 |
| 17 | M25 x 1,0 | 31,0 | 19,3 | 24,0 | 26,9 | 31,7 | 28,5 | 11,4 | 6,7 |
| 19 | M28 x 1,0 | 34,0 | 21,8 | 27,0 | 31,2 | 34,9 | 31,7 | 14,9 | 7,2 |
| 21 | M31 x 1,0 | 37,0 | 25,2 | 34,0 | 33,0 | 38,0 | 34,9 | 16,8 | 8,7 |
| 23 | M34 x 1,0 | 40,0 | 28,1 | 37,0 | 34,5 | 42,8 | 38,0 | 23,9 | 9,7 |
| 25 | M37 x 1,0 | 43,5 | 31,3 | 37,0 | 36,1 | 46,0 | 38,0 | 22,8 | 9,7 |

96H1-17-2-Z

SERIES
CONNECTOR INTERFACE
ANGLE
SHELL SIZE (TABLE 1)
MATERIAL
NICKEL ALUMINIUM BRONZE
FINISH
SHOT BLAST

DRAWING NOT TO SCALE, DIMENSIONS IN MM

See pages 18-26 for complete list of available materials, finishes and Connector interfaces
(dimensions, form and O Ring subject to change depending on Backshell material and Connector interface)

THIS DRAWING IS THE PROPERTY OF POLAMCO LTD AND MUST NOT BE USED FOR COMMERCIAL PURPOSES WITHOUT WRITTEN CONSENT OF THE COMPANY

# 96F (AD) - Cable Clamp Backshell Anti-Decoupling

## Interface F - MIL-DTL-38999 SERIES I & II

Polamco

**Interconnect Solutions Worldwide**

STRAIN RELIEF

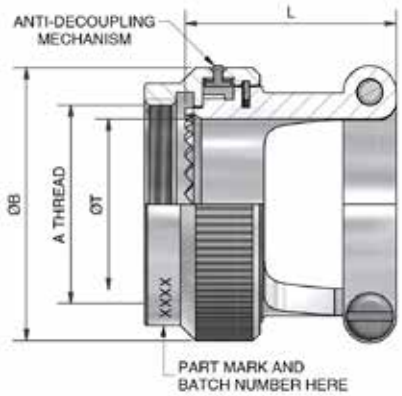

ANGLE 1

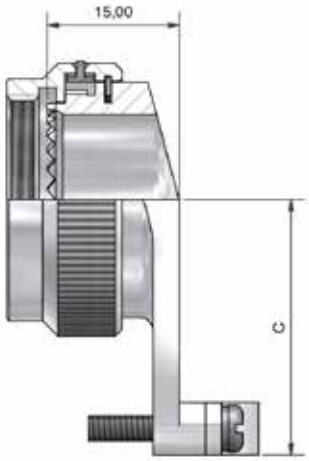


TABLE 1

| DASH NO. | SHELL SIZE SERIES I | SHELL SIZE SERIES II | A THREAD | ØB MAX | ØT | C MAX | L MAX | K MAX | M MAX |
|---|---|---|---|---|---|---|---|---|---|
| 08 | 09 | 08 | 7/16-28UNEF | 18,0 | 6,8 | 28,0 | 24,5 | 6,2 | 5,2 |
| 10 | 11 | 10 | 9/16-24UNEF | 21,0 | 10,3 | 30,0 | 24,5 | 7,4 | 5,8 |
| 12 | 13 | 12 | 11/16-24UNEF | 25,0 | 13,2 | 31,0 | 24,5 | 9,0 | 6,3 |
| 14 | 15 | 14 | 13/16-20UNEF | 28,0 | 16,3 | 33,0 | 24,5 | 10,9 | 8,2 |
| 16 | 17 | 16 | 15/16-20UNEF | 31,0 | 19,5 | 34,4 | 24,5 | 11,9 | 8,7 |
| 18 | 19 | 18 | 1 1/16-18UNEF | 34,0 | 22,0 | 36,0 | 27,5 | 15,4 | 10,2 |
| 20 | 21 | 20 | 1 3/16-18UNEF | 37,0 | 25,4 | 37,6 | 34,5 | 17,3 | 11,2 |
| 22 | 23 | 22 | 1 5/16-18UNEF | 40,0 | 28,3 | 39,5 | 34,5 | 24,4 | 12,3 |
| 24 | 25 | 24 | 1 7/16-18UNEF | 43,5 | 31,5 | 42,0 | 34,5 | 23,3 | 13,2 |

TABLE 2

| CODE | MATERIAL / PLATING |
|---|---|
| 1-C | ALUMINIUM / ELECTROLESS NICKEL |
| 1-B | ALUMINIUM / CADMIUM OLIVE DRAB OVER ELECTROLESS NICKEL |
| 1-ZB | ALUMINIUM / ZINC COBALT OLIVE DRAB OVER ELECTROLESS NICKEL |
| 1-ZN | ALUMINIUM / ZINC NICKEL BLACK PASSIVATE OVER ELECTROLESS NICKEL |
| 4-J | STAINLESS STEEL / PASSIVATE |
| 2-Z | NICKEL ALUMINIUM BRONZE / SHOT BLAST |

LIST NOT EXHAUSTIVE, SEE PLATING TABLE FOR OTHER OPTIONS

ANGLE 3

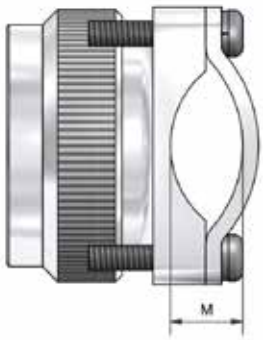


96F1-16-1-C-AD

- SERIES
- CONNECTOR INTERFACE
- ANGLE
- DASH NO. (TABLE 1)
- MATERIAL (TABLE 2)
- FINISH (TABLE 2)
- ANTI-DECOUPLING

DRAWING NOT TO SCALE, DIMENSIONS IN MM

See pages 18-26 for complete list of available materials, finishes and Connector interfaces
(dimensions, form and O Ring subject to change depending on Backshell material and Connector interface)



THIS DRAWING IS THE PROPERTY OF POLAMCO LTD AND MUST NOT BE USED FOR COMMERCIAL PURPOSES WITHOUT WRITTEN CONSENT OF THE COMPANY

# 96H (AD) - Cable Clamp Backshell Anti-Decoupling

## Interface H - MIL-DTL-38999 SERIES III & IV

Polamco

**Interconnect Solutions Worldwide**



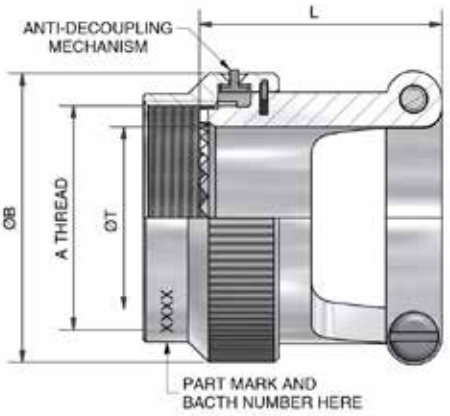


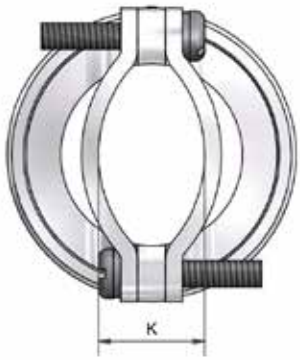


ANGLE 1

TABLE 1

| SHELL SIZE | A THREAD | ØB MAX | ØT | C MAX | L MAX | K MAX | M MAX |
|---|---|---|---|---|---|---|---|
| 09 | M12 x 1.0 | 18,0 | 6,9 | 20,0 | 23,5 | 6,2 | 5,5 |
| 11 | M15 x 1.0 | 21,0 | 10,3 | 21,0 | 23,5 | 7,4 | 5,5 |
| 13 | M18 x 1.0 | 25,0 | 13,1 | 22,0 | 25,5 | 9,0 | 5,9 |
| 15 | M22 x 1.0 | 28,0 | 16,3 | 23,0 | 25,5 | 10,9 | 6,7 |
| 17 | M25 x 1.0 | 31,0 | 19,5 | 25,0 | 26,5 | 11,9 | 6,8 |
| 19 | M28 x 1.0 | 34,0 | 22,0 | 27,5 | 29,5 | 15,4 | 7,3 |
| 21 | M31 x 1.0 | 37,0 | 25,1 | 30,0 | 36,5 | 17,3 | 8,8 |
| 23 | M34 x 1.0 | 40,0 | 28,3 | 31,5 | 39,5 | 24,4 | 9,7 |
| 25 | M37 x 1.0 | 43,5 | 31,6 | 34,5 | 39,5 | 23,3 | 9,7 |

TABLE 2

| CODE | MATERIAL / PLATING |
|---|---|
| 1-C | ALUMINIUM / ELECTROLESS NICKEL |
| 1-B | ALUMINIUM / CADMIUM OLIVE DRAB OVER ELECTROLESS NICKEL |
| 1-ZB | ALUMINIUM / ZINC COBALT OLIVE DRAB OVER ELECTROLESS NICKEL |
| 1-ZN | ALUMINIUM / ZINC NICKEL BLACK PASSIVATE OVER ELECTROLESS NICKEL |
| 4-J | STAINLESS STEEL / PASSIVATE |
| 2-Z | NICKEL ALUMINIUM BRONZE / SHOT BLAST |

LIST NOT EXHAUSTIVE, SEE PLATING TABLE FOR OTHER OPTIONS

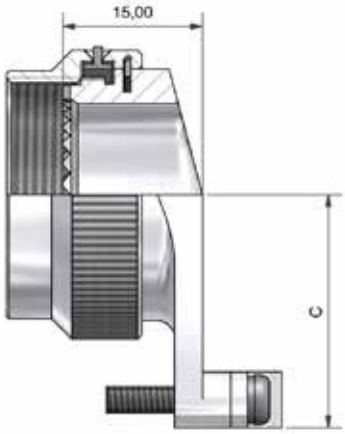


ANGLE 3

96H1-17-1-C-AD

- SERIES
- CONNECTOR INTERFACE
- ANGLE
- SHELL SIZE (TABLE 1)
- MATERIAL (TABLE 2)
- FINISH (TABLE 2)
- ANTI-DECOUPLING

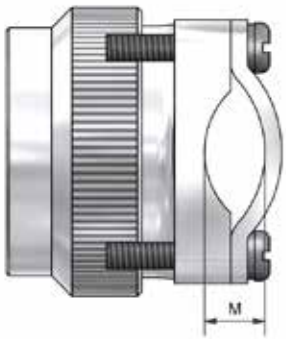


DRAWING NOT TO SCALE, DIMENSIONS IN MM

See pages 18-26 for complete list of available materials, finishes and Connector interfaces
(dimensions, form and O Ring subject to change depending on Backshell material and Connector interface)

THIS DRAWING IS THE PROPERTY OF POLAMCO LTD AND MUST NOT BE USED FOR COMMERCIAL PURPOSES WITHOUT WRITTEN CONSENT OF THE COMPANY

# 77F - Cable Clamp, Optional Entry Size

## Interface F - MIL-DTL-38999 SERIES I & II

Polamco

**Interconnect Solutions Worldwide**

STRAIN RELIEF

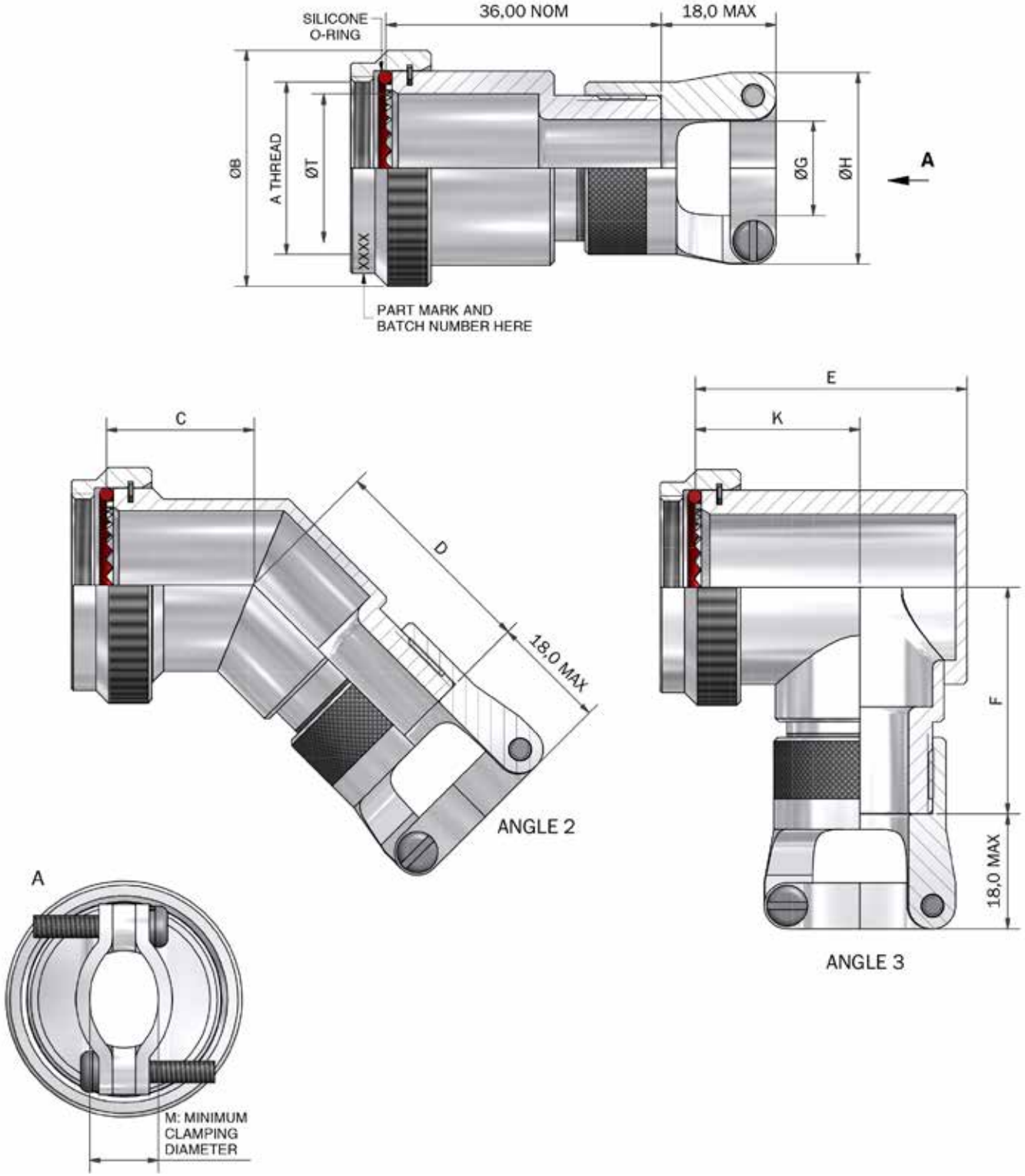


DRAWING NOT TO SCALE, DIMENSIONS IN MM

See pages 18-26 for complete list of available materials, finishes and Connector interfaces
(dimensions, form and O Ring subject to change depending on Backshell material and Connector interface)



THIS DRAWING IS THE PROPERTY OF POLAMCO LTD AND MUST NOT BE USED FOR COMMERCIAL PURPOSES WITHOUT WRITTEN CONSENT OF THE COMPANY

# 77F - Cable Clamp, Optional Entry Size

## Interface F - MIL-DTL-38999 SERIES I & II

Polamco

**Interconnect Solutions Worldwide**



TABLE 1

| DASH NO. | SHELL SIZE SERIES I | SHELL SIZE SERIES II | A THREAD | ØB MAX | ØT MIN | C MAX | D MAX | E MAX | F MAX | K ± 0,5 |
|---|---|---|---|---|---|---|---|---|---|---|
| 08 | 09 | 08 | 7/16-28 UNEF | 18,3 | 6,6 | 16,4 | 24,6 | 22,7 | 25,0 | 15,0 |
| 10 | 11 | 10 | 9/16-24 UNEF | 21,5 | 10,1 | 17,2 | 25,4 | 26,2 | 26,8 | 17,0 |
| 12 | 13 | 12 | 11/16-24 UNEF | 24,5 | 12,9 | 17,6 | 25,8 | 29,2 | 28,3 | 18,0 |
| 14 | 15 | 14 | 13/16-20 UNEF | 27,8 | 16,1 | 18,5 | 26,6 | 32,2 | 29,8 | 20,0 |
| 16 | 17 | 16 | 15/16-20 UNEF | 30,8 | 19,3 | 19,2 | 27,4 | 35,7 | 31,5 | 21,5 |
| 18 | 19 | 18 | 1 1/16-18 UNEF | 34,1 | 21,7 | 19,6 | 27,8 | 39,7 | 33,1 | 23,0 |
| 20 | 21 | 20 | 1 3/16-18 UNEF | 37,3 | 24,9 | 20,4 | 28,6 | 42,2 | 34,7 | 25,0 |
| 22 | 23 | 22 | 1 5/16-18 UNEF | 40,5 | 28,1 | 20,8 | 29,0 | 45,2 | 36,4 | 26,0 |
| 24 | 25 | 24 | 1 7/16-18 UNEF | 43,7 | 31,3 | 21,7 | 29,9 | 48,2 | 37,7 | 28,0 |

TABLE 2

| ENTRY SIZE | ØG MIN | ØH MAX | M ±0,5 |
|---|---|---|---|
| 03 | 4,7 | 17,1 | 6,8 |
| 04 | 6,3 | 19,1 | 6,7 |
| 05 | 7,9 | 20,7 | 7,8 |
| 06 | 9,5 | 22,3 | 7,9 |
| 07 | 11,1 | 23,8 | 8,6 |
| 08 | 12,7 | 25,3 | 9,0 |
| 09 | 14,2 | 27,0 | 10,2 |
| 10 | 15,8 | 28,6 | 10,4 |
| 11 | 17,4 | 30,3 | 11,5 |
| 12 | 19,0 | 31,8 | 12,4 |
| 13 | 20,6 | 33,3 | 15,0 |
| 14 | 22,2 | 35,0 | 15,4 |
| 15 | 23,8 | 36,7 | 16,8 |
| 16 | 25,4 | 38,1 | 17,3 |
| 18 | 28,6 | 39,7 | 18,8 |
| 20 | 31,8 | 44,5 | 22,4 |
| 22 | 35,0 | 47,6 | 24,4 |
| 24 | 38,1 | 51,2 | 26,4 |

TABLE 3

| CODE | FINISH |
|---|---|
| C | ELECTROLESS NICKEL |
| B | CADMIUM OLIVE DRAB OVER ELECTROLESS NICKEL |
| ZB | ZINC COBALT OLIVE DRAB OVER ELECTROLESS NICKEL |
| ZN | ZINC NICKEL BLACK PASSIVATE OVER ELECTROLESS NICKEL |
| G | BLACK ANODISE, SULPHURIC |

LIST NOT EXHAUSTIVE, SEE PLATING TABLE FOR OTHER OPTIONS

77F1-16-08-1-C

- SERIES
- CONNECTOR INTERFACE
- ANGLE
- DASH NO. (TABLE 1)
- ENTRY SIZE (TABLE 2)
- MATERIAL
  - ALUMINIUM ALLOY
- FINISH (TABLE 3)

DRAWING NOT TO SCALE, DIMENSIONS IN MM

See pages 18-26 for complete list of available materials, finishes and Connector interfaces
(dimensions, form and O Ring subject to change depending on Backshell material and Connector interface)

THIS DRAWING IS THE PROPERTY OF POLAMCO LTD AND MUST NOT BE USED FOR COMMERCIAL PURPOSES WITHOUT WRITTEN CONSENT OF THE COMPANY

# 77H - Cable Clamp, Optional Entry Size

## Interface H - MIL-DTL-38999 SERIES III & IV

Polamco

**Interconnect Solutions Worldwide**

STRAIN RELIEF

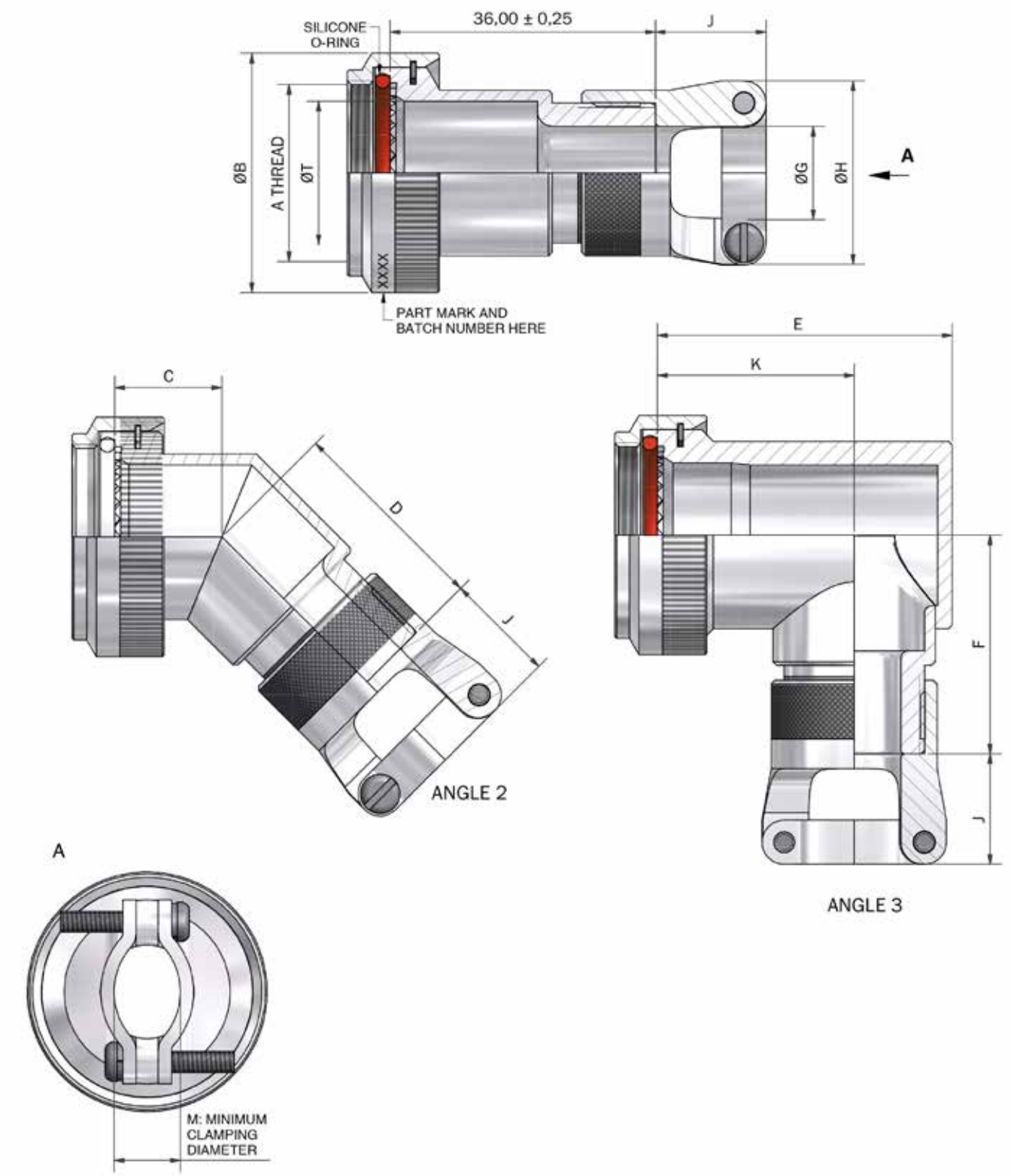


DRAWING NOT TO SCALE, DIMENSIONS IN MM

See pages 18-26 for complete list of available materials, finishes and Connector interfaces
(dimensions, form and O Ring subject to change depending on Backshell material and Connector interface)



THIS DRAWING IS THE PROPERTY OF POLAMCO LTD AND MUST NOT BE USED FOR COMMERCIAL PURPOSES WITHOUT WRITTEN CONSENT OF THE COMPANY

# 77H - Cable Clamp, Optional Entry Size

## Interface H - MIL-DTL-38999 SERIES III & IV

Polamco

**Interconnect Solutions Worldwide**



TABLE 1

| SHELL SIZE | A THREAD | ØB MAX | ØT MIN | C MAX | D MAX | E MAX | F MAX | K ± 0,5 |
|---|---|---|---|---|---|---|---|---|
| 09 | M12 x 1.0 | 18,0 | 6,7 | 13,1 | 24,6 | 25,7 | 25,0 | 17,5 |
| 11 | M15 x 1.0 | 21,0 | 10,2 | 13,9 | 25,4 | 26,7 | 26,8 | 17,5 |
| 13 | M18 x 1.0 | 24,5 | 13,5 | 14,5 | 25,8 | 31,2 | 28,3 | 20,0 |
| 15 | M22 x 1.0 | 29,0 | 16,2 | 15,5 | 26,6 | 37,2 | 29,8 | 24,5 |
| 17 | M25 x 1.0 | 32,5 | 19,4 | 16,1 | 27,4 | 40,2 | 31,5 | 26,7 |
| 19 | M28 x 1.0 | 35,5 | 21,8 | 16,8 | 27,8 | 44,7 | 33,1 | 27,0 |
| 21 | M31 x 1.0 | 37,0 | 25,1 | 17,1 | 28,6 | 49,2 | 34,7 | 30,5 |
| 23 | M34 x 1.0 | 40,0 | 28,2 | 17,7 | 29,0 | 51,7 | 36,4 | 31,5 |
| 25 | M37 x 1.0 | 43,5 | 31,4 | 18,4 | 29,9 | 53,2 | 37.7 | 28,5 |

TABLE 2

| ENTRY SIZE | ØG MIN | ØH MAX | M ±0,5 | J MAX |
|---|---|---|---|---|
| 03 | 4,7 | 17,1 | 6,8 | 15,0 |
| 04 | 6,3 | 19,1 | 6,7 | 15,0 |
| 05 | 7,9 | 20,7 | 7,8 | 15,0 |
| 06 | 9,5 | 22,3 | 7,9 | 15,0 |
| 07 | 11,1 | 23,8 | 8,6 | 15,0 |
| 08 | 12,7 | 25,3 | 9,0 | 15,0 |
| 09 | 14,2 | 27,0 | 10,2 | 15,0 |
| 10 | 15,8 | 28,6 | 10,4 | 15,0 |
| 11 | 17,4 | 30,3 | 11,5 | 15,0 |
| 12 | 19,0 | 31,8 | 12,4 | 15,0 |
| 13 | 20,6 | 33,3 | 15,0 | 15,0 |
| 14 | 22,2 | 35,0 | 15,4 | 18,0 |
| 15 | 23,8 | 36,7 | 16,8 | 18,0 |
| 16 | 25,4 | 38,1 | 17,3 | 18,0 |
| 18 | 28,6 | 39,7 | 18,8 | 18,0 |
| 20 | 31,8 | 44,5 | 22,4 | 18,0 |
| 22 | 35,0 | 47,6 | 24,4 | 18,0 |
| 24 | 38,1 | 51,2 | 26,4 | 18,0 |

TABLE 3

| CODE | FINISH |
|---|---|
| C | ELECTROLESS NICKEL |
| B | CADMIUM OLIVE DRAB OVER ELECTROLESS NICKEL |
| ZB | ZINC COBALT OLIVE DRAB OVER ELECTROLESS NICKEL |
| ZN | ZINC NICKEL BLACK PASSIVATE OVER ELECTROLESS NICKEL |
| G | BLACK ANODISE, SULPHURIC |

LIST NOT EXHAUSTIVE, SEE PLATING TABLE FOR OTHER OPTIONS

77H1-17-08-1-C

SERIES
CONNECTOR INTERFACE
ANGLE
SHELL SIZE (TABLE 1)
ENTRY SIZE (TABLE 2)
MATERIAL
ALUMINIUM ALLOY
FINISH (TABLE 3)

DRAWING NOT TO SCALE, DIMENSIONS IN MM

See pages 18-26 for complete list of available materials, finishes and Connector interfaces
(dimensions, form and O Ring subject to change depending on Backshell material and Connector interface)

THIS DRAWING IS THE PROPERTY OF POLAMCO LTD AND MUST NOT BE USED FOR COMMERCIAL PURPOSES WITHOUT WRITTEN CONSENT OF THE COMPANY

# 37F - Cable Sealing Backshell

## Interface F - MIL-DTL-38999 SERIES I

Polamco

**Interconnect Solutions Worldwide**

STRAIN RELIEF

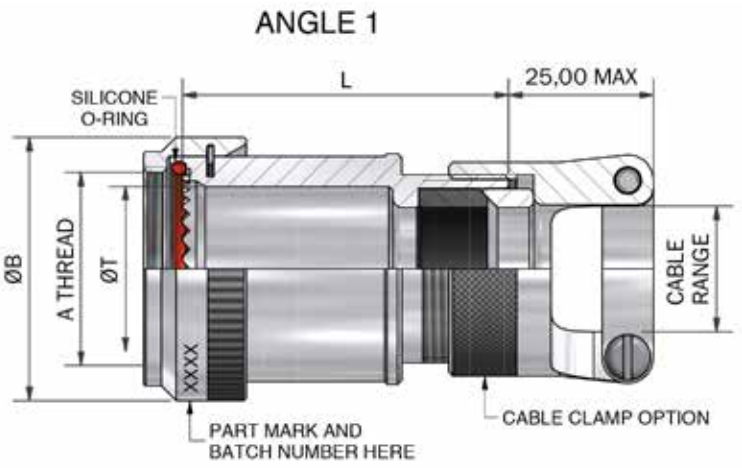


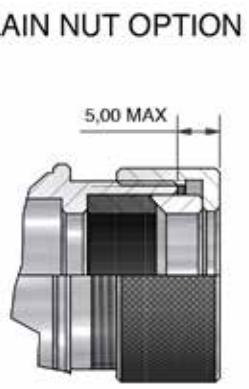


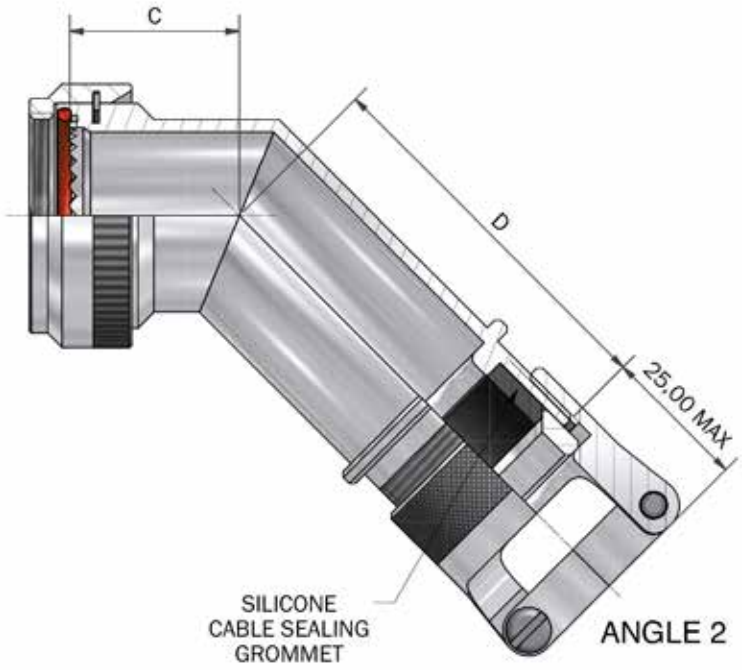


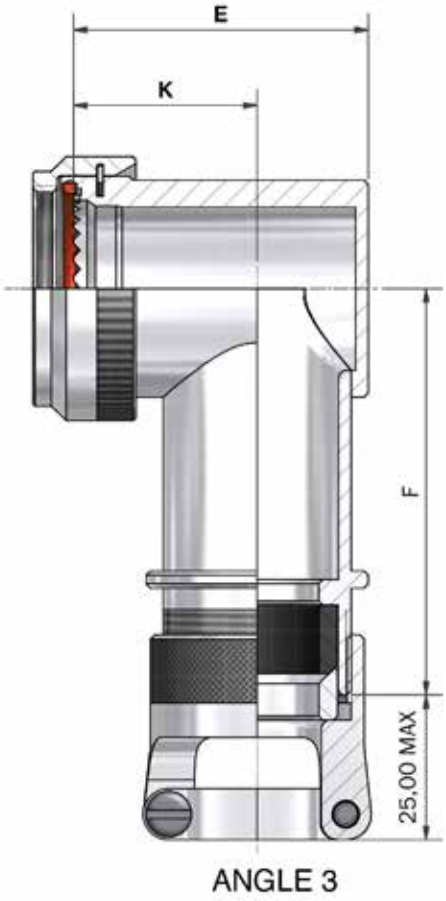


See pages 18-26 for complete list of available materials, finishes and Connector interfaces
(dimensions, form and O Ring subject to change depending on Backshell material and Connector interface)



THIS DRAWING IS THE PROPERTY OF POLAMCO LTD AND MUST NOT BE USED FOR COMMERCIAL PURPOSES WITHOUT WRITTEN CONSENT OF THE COMPANY

# 37F - Cable Sealing Backshell

## Interface F - MIL-DTL-38999 SERIES I

Polamco

**Interconnect Solutions Worldwide**



TABLE 1

| SHELL SIZE | A THREAD | ØB MAX | ØT MIN | MAX ENTRY | C MAX | D MAX | E MAX | F MAX | K ±0,5 |
|---|---|---|---|---|---|---|---|---|---|
| 09 | 7/16-28 UNEF | 18,0 | 6,8 | - | 16,4 | 35,8 | 22,7 | 36,1 | 15,0 |
| 11 | 9/16-24 UNEF | 21,0 | 10,2 | 04 | 17,2 | 37,3 | 26,2 | 39,1 | 17,0 |
| 13 | 11/16-24 UNEF | 24,5 | 13,1 | 06 | 17,6 | 38,9 | 29,2 | 39,6 | 18,0 |
| 15 | 13/16-20 UNEF | 27,8 | 16,2 | 10 | 18,5 | 41,1 | 32,2 | 41,4 | 20,0 |
| 17 | 15/16-20 UNEF | 30,8 | 19,3 | 12 | 19,2 | 43,9 | 35,7 | 48,0 | 21,5 |
| 19 | 1 1/16-18 UNEF | 34,1 | 22,3 | 12 | 19,6 | 48,8 | 39,7 | 50,8 | 23,0 |
| 21 | 1 3/16-18 UNEF | 37,3 | 25,8 | 16 | 20,4 | 50,1 | 42,2 | 50,8 | 25,0 |
| 23 | 1 5/16-18 UNEF | 41,0 | 28,3 | 16 | 20,8 | 52,6 | 45,2 | 50,8 | 26,0 |
| 25 | 1 7/16-18 UNEF | 43,7 | 31,5 | 16 | 21,7 | 54,0 | 48,2 | 50,8 | 28,0 |

IF MAX ENTRY IS EXCEEDED, ADAPTOR ASSEMBLY IS STYLE T2 (SEE PAGE 18 FOR MORE INFORMATION)
IN WHICH CASE DIMENSIONS C, D, E, F & K DO NOT APPLY AND MIN L IS L3

TABLE 2

| ENTRY SIZE | CABLE RANGE |
|---|---|
| 04 | 3,2 - 7,9 |
| 06 | 6,4 - 11,1 |
| 08 | 9,8 - 14,3 |
| 10 | 8,9 - 15,9 |
| 12 | 12,7 - 19,1 |
| 16 | 15,9 - 23,8 |
| 20 | 22,2 - 31,8 |
| 24 | 25,4 - 34,9 |
| 28 | 31,8 - 41,3 |
| 32 | 36,5 - 47,6 |

TABLE 3

| CODE | FINISH |
|---|---|
| C | ELECTROLESS NICKEL |
| B | CADMIUM OLIVE DRAB OVER ELECTROLESS NICKEL |
| ZB | ZINC COBALT OLIVE DRAB OVER ELECTROLESS NICKEL |
| ZN | ZINC NICKEL BLACK PASSIVATE OVER ELECTROLESS NICKEL |
| G | BLACK ANODISE, SULPHURIC |

LIST NOT EXHAUSTIVE, SEE PLATING TABLE FOR OTHER OPTIONS

37F1-17-08-1-C-CC-L3

- SERIES
- CONNECTOR INTERFACE
- ANGLE
- SHELL SIZE (TABLE1)
- ENTRY SIZE (TABLE 2)
- MATERIAL
  - ALUMINIUM ALLOY
- FINISH (TABLE 3)
- CABLE CLAMP OPTION
  - OMIT FOR PLAIN NUT
- LENGTH CODE (STRAIGHT ONLY)
  - 1/2" INCREMENTS, MINIMUM L2(=1")

DRAWING NOT TO SCALE, DIMENSIONS IN MM

See pages 18-26 for complete list of available materials, finishes and Connector interfaces
(dimensions, form and O Ring subject to change depending on Backshell material and Connector interface)

THIS DRAWING IS THE PROPERTY OF POLAMCO LTD AND MUST NOT BE USED FOR COMMERCIAL PURPOSES WITHOUT WRITTEN CONSENT OF THE COMPANY

# 37F - Cable Sealing Backshell

## Interface F - MIL-DTL-38999 SERIES II

Polamco

**Interconnect Solutions Worldwide**

STRAIN RELIEF

ANGLE 1

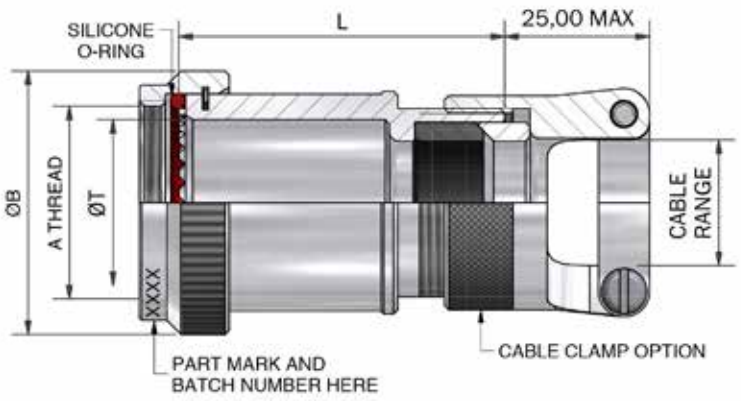


PLAIN NUT OPTION

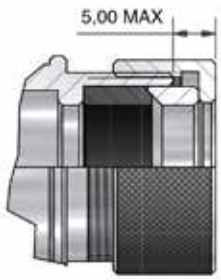


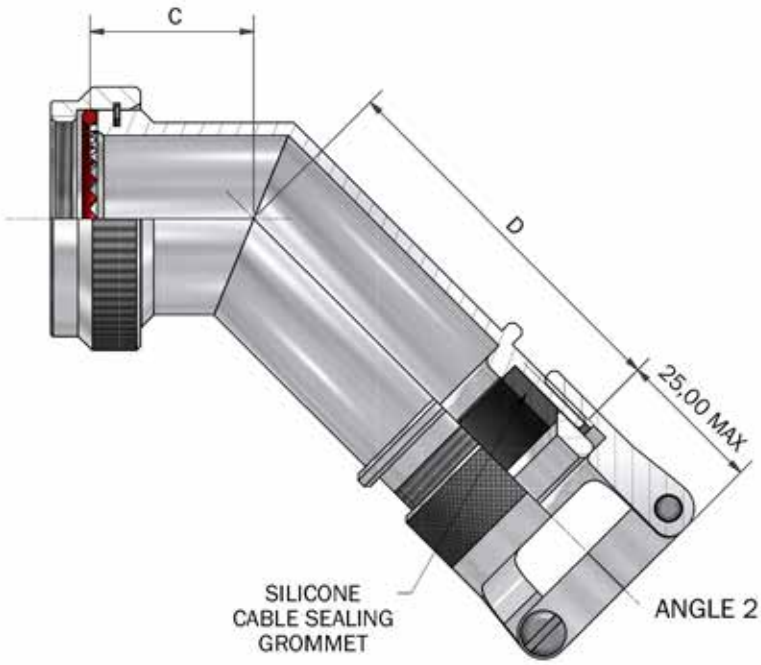


ANGLE 2

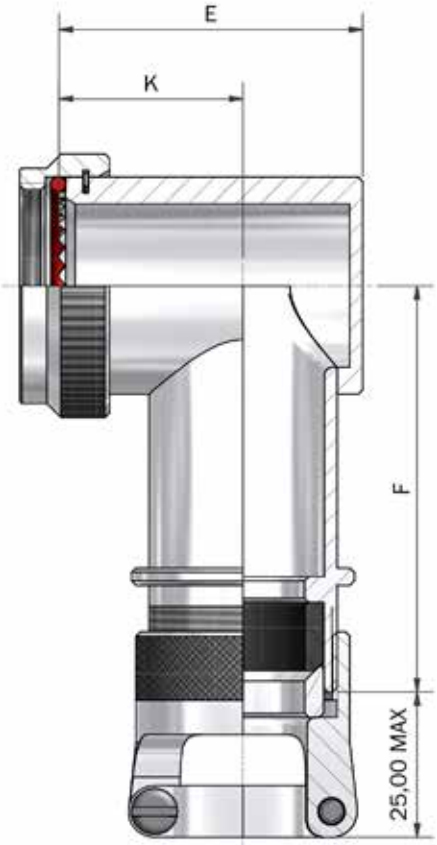


ANGLE 3

See pages 18-26 for complete list of available materials, finishes and Connector interfaces
(dimensions, form and O Ring subject to change depending on Backshell material and Connector interface)



THIS DRAWING IS THE PROPERTY OF POLAMCO LTD AND MUST NOT BE USED FOR COMMERCIAL PURPOSES WITHOUT WRITTEN CONSENT OF THE COMPANY

# 37F - Cable Sealing Backshell

## Interface F - MIL-DTL-38999 SERIES II

Polamco

**Interconnect Solutions Worldwide**



TABLE 1

| SHELL SIZE | A THREAD | ØB MAX | ØT MIN | MAX ENTRY | C MAX | D MAX | E MAX | F MAX | K ±0,5 |
|---|---|---|---|---|---|---|---|---|---|
| 08 | 7/16-28 UNEF | 18,3 | 6,6 | - | 16,4 | 35,8 | 22,7 | 36,1 | 15,0 |
| 10 | 9/16-24 UNEF | 21,5 | 10,1 | 04 | 17,2 | 37,3 | 26,2 | 39,1 | 17,0 |
| 12 | 11/16-24 UNEF | 24,5 | 12,9 | 06 | 17,6 | 38,9 | 29,2 | 39,6 | 18,0 |
| 14 | 13/16-20 UNEF | 27,8 | 16,1 | 10 | 18,5 | 41,1 | 32,2 | 41,4 | 20,0 |
| 16 | 15/16-20 UNEF | 30,8 | 19,3 | 12 | 19,2 | 43,9 | 35,7 | 48,0 | 21,5 |
| 18 | 1 1/16-18 UNEF | 34,1 | 21,7 | 12 | 19,6 | 48,8 | 39,7 | 50,8 | 23,0 |
| 20 | 1 3/16-18 UNEF | 37,3 | 24,9 | 16 | 20,4 | 50,1 | 42,2 | 50,8 | 25,0 |
| 22 | 1 5/16-18 UNEF | 40,5 | 28,1 | 16 | 20,8 | 52,6 | 45,2 | 50,8 | 26,0 |
| 24 | 1 7/16-18 UNEF | 43,7 | 31,3 | 16 | 21,7 | 54,0 | 48,2 | 50,8 | 28,0 |

IF MAX ENTRY IS EXCEEDED, ADAPTOR ASSEMBLY IS STYLE T2 (SEE PAGE 18 FOR MORE INFORMATION)
IN WHICH CASE DIMENSIONS C, D, E, F & K DO NOT APPLY AND MIN L IS L3

TABLE 2

| ENTRY SIZE | CABLE RANGE |
|---|---|
| 04 | 3,2 - 7,9 |
| 06 | 6,4 - 11,1 |
| 08 | 9,8 - 14,3 |
| 10 | 8,9 - 15,9 |
| 12 | 12,7 - 19,1 |
| 16 | 15,9 - 23,8 |
| 20 | 22,2 - 31,8 |
| 24 | 25,4 - 34,9 |
| 28 | 31,8 - 41,3 |
| 32 | 36,5 - 47,6 |

TABLE 3

| CODE | FINISH |
|---|---|
| C | ELECTROLESS NICKEL |
| B | CADMIUM OLIVE DRAB OVER ELECTROLESS NICKEL |
| ZB | ZINC COBALT OLIVE DRAB OVER ELECTROLESS NICKEL |
| ZN | ZINC NICKEL BLACK PASSIVATE OVER ELECTROLESS NICKEL |
| G | BLACK ANODISE, SULPHURIC |

LIST NOT EXHAUSTIVE, SEE PLATING TABLE FOR OTHER OPTIONS

37F1-16-08-1-C-CC-L3

- SERIES
- CONNECTOR INTERFACE
- ANGLE
- SHELL SIZE (TABLE 1)
- ENTRY SIZE (TABLE 2)
- MATERIAL
  - ALUMINIUM ALLOY
- FINISH (TABLE 3)
- CABLE CLAMP OPTION
  - OMIT FOR PLAIN NUT
- LENGTH CODE (STRAIGHT ONLY)
  - 1/2" INCREMENTS, MINIMUM L2 (=1")

DRAWING NOT TO SCALE, DIMENSIONS IN MM

See pages 18-26 for complete list of available materials, finishes and Connector interfaces
(dimensions, form and O Ring subject to change depending on Backshell material and Connector interface)

THIS DRAWING IS THE PROPERTY OF POLAMCO LTD AND MUST NOT BE USED FOR
COMMERCIAL PURPOSES WITHOUT WRITTEN CONSENT OF THE COMPANY

# 37H - Cable Sealing Backshell

## Interface H - MIL-DTL-38999 SERIES III & IV

Polamco

**Interconnect Solutions Worldwide**

STRAIN RELIEF

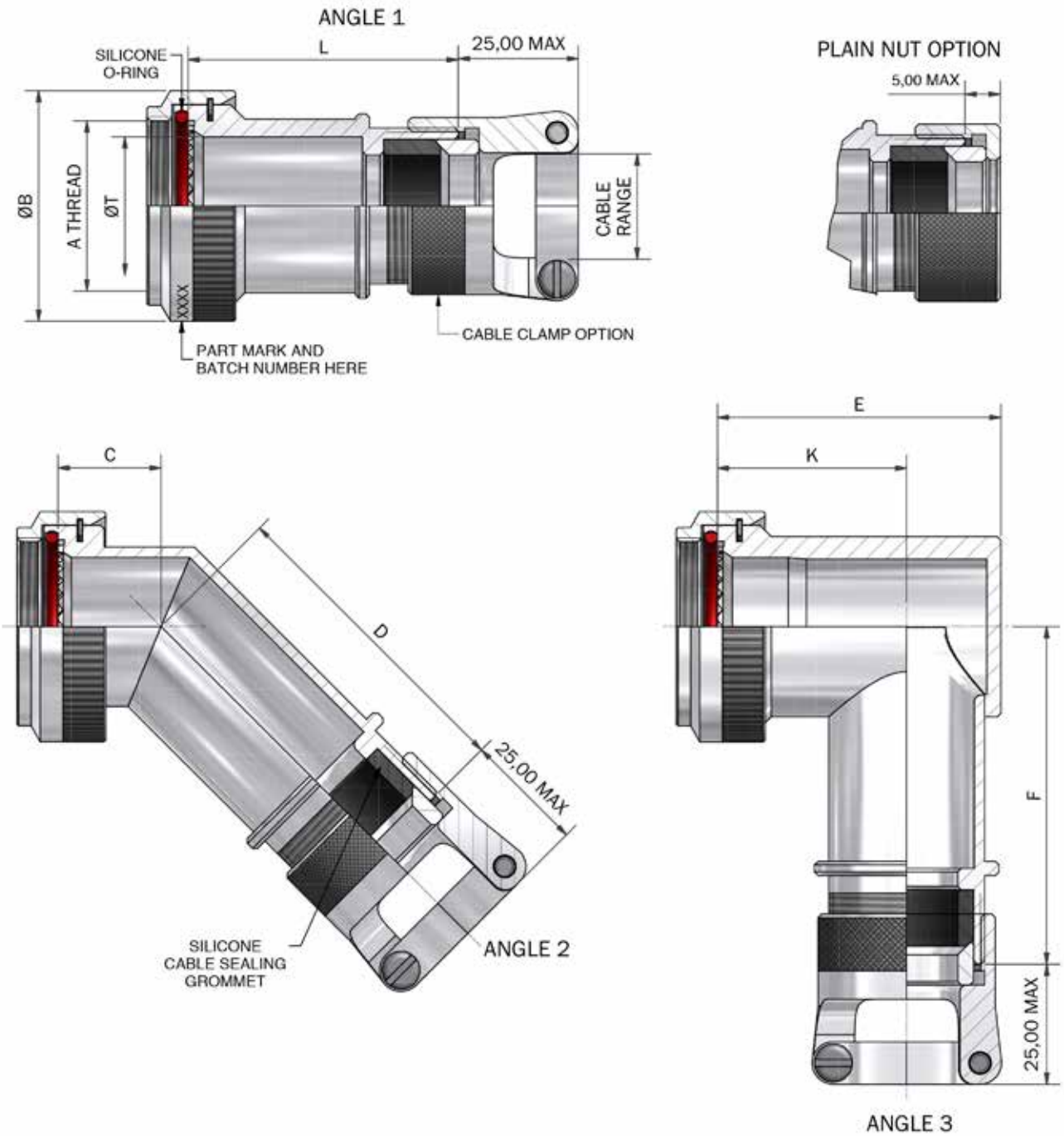


See pages 18-26 for complete list of available materials, finishes and Connector interfaces
(dimensions, form and O Ring subject to change depending on Backshell material and Connector interface)



THIS DRAWING IS THE PROPERTY OF POLAMCO LTD AND MUST NOT BE USED FOR COMMERCIAL PURPOSES WITHOUT WRITTEN CONSENT OF THE COMPANY

TABLE 2

| ENTRY SIZE | CABLE RANGE |
|---|---|
| 04 | 3,2 - 7,9 |
| 06 | 6,4 - 11,1 |
| 08 | 9,8 - 14,3 |
| 10 | 8,9 - 15,9 |
| 12 | 12,7 - 19,1 |
| 16 | 15,9 - 23,8 |
| 20 | 22,2 - 31,8 |
| 24 | 25,4 - 34,9 |
| 28 | 31,8 - 41,3 |
| 32 | 36,5 - 47,6 |

TABLE 3

| CODE | FINISH |
|---|---|
| C | ELECTROLESS NICKEL |
| B | CADMIUM OLIVE DRAB OVER ELECTROLESS NICKEL |
| ZB | ZINC COBALT OLIVE DRAB OVER ELECTROLESS NICKEL |
| ZN | ZINC NICKEL BLACK PASSIVATE OVER ELECTROLESS NICKEL |
| G | BLACK ANODISE, SULPHURIC |

LIST NOT EXHAUSTIVE, SEE PLATING TABLE FOR OTHER OPTIONS

37H1-17-08-1-C-CC-L3

SERIES
CONNECTOR INTERFACE
ANGLE
SHELL SIZE (TABLE 1)
ENTRY SIZE (TABLE 2)
MATERIAL
ALUMINIUM ALLOY
FINISH (TABLE 3)
CABLE CLAMP OPTION
OMIT FOR PLAIN NUT
LENGTH CODE (STRAIGHT ONLY)
1/2 INCREMENTS, MINIMUM L2(=1")

DRAWING NOT TO SCALE, DIMENSIONS IN MM

See pages 18-26 for complete list of available materials, finishes and Connector interfaces
(dimensions, form and O Ring subject to change depending on Backshell material and Connector interface)

THIS DRAWING IS THE PROPERTY OF POLAMCO LTD AND MUST NOT BE USED FOR COMMERCIAL PURPOSES WITHOUT WRITTEN CONSENT OF THE COMPANY

# 86F - Tie Post Backshell

## Interface F - MIL-DTL-38999 SERIES I & II

Polamco

**Interconnect Solutions Worldwide**

STRAIN RELIEF

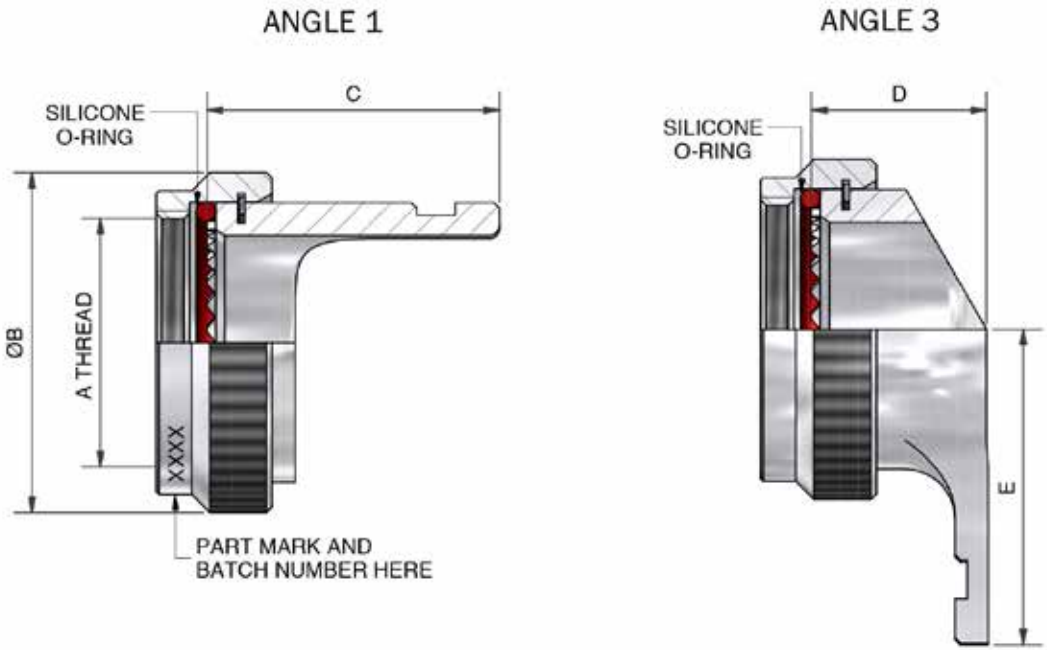


TABLE 1

| DASH NO. | SHELL SIZE SERIES I | SHELL SIZE SERIES II | A THREAD | ØB MAX | C MAX | D MAX | E MAX |
|---|---|---|---|---|---|---|---|
| 08 | 09 | 08 | 7/16-28 UNEF | 18,3 | 24,0 | 14,0 | 14,5 |
| 10 | 11 | 10 | 9/16-24 UNEF | 21,5 | 24,0 | 14,0 | 17,9 |
| 12 | 13 | 12 | 11/16-24 UNEF | 24,5 | 26,0 | 16,0 | 20,8 |
| 14 | 15 | 14 | 13/16-20 UNEF | 27,8 | 26,0 | 16,0 | 25,7 |
| 16 | 17 | 16 | 15/16-20 UNEF | 30,8 | 27,0 | 16,0 | 29,0 |
| 18 | 19 | 18 | 1 1/16-18 UNEF | 34,1 | 30,0 | 16,0 | 32,2 |
| 20 | 21 | 20 | 1 3/16-18 UNEF | 37,3 | 37,0 | 20,0 | 33,5 |
| 22 | 23 | 22 | 1 5/16-18 UNEF | 40,5 | 40,0 | 20,0 | 36,7 |
| 24 | 25 | 24 | 1 7/16-18 UNEF | 43,7 | 40,0 | 20,0 | 39,6 |

TABLE 2

| CODE | FINISH |
|---|---|
| C | ELECTROLESS NICKEL |
| B | CADMIUM OLIVE DRAB OVER ELECTROLESS NICKEL |
| ZB | ZINC COBALT OLIVE DRAB OVER ELECTROLESS NICKEL |
| ZN | ZINC NICKEL BLACK PASSIVATE OVER ELECTROLESS NICKEL |
| G | BLACK ANODISE, SULPHURIC |

LIST NOT EXHAUSTIVE, SEE PLATING TABLE FOR OTHER OPTIONS

86F1-16-1-C

- SERIES
- CONNECTOR INTERFACE
- ANGLE
- DASH NO. (TABLE 1)
- MATERIAL
  - ALUMINIUM ALLOY
- FINISH (TABLE 2)

DRAWING NOT TO SCALE, DIMENSIONS IN MM

See pages 18-26 for complete list of available materials, finishes and Connector interfaces
(dimensions, form and O Ring subject to change depending on Backshell material and Connector interface)



THIS DRAWING IS THE PROPERTY OF POLAMCO LTD AND MUST NOT BE USED FOR COMMERCIAL PURPOSES WITHOUT WRITTEN CONSENT OF THE COMPANY

# 86H - Tie Post Backshell

## Interface H - MIL-DTL-38999 SERIES III & IV

Polamco

**Interconnect Solutions Worldwide**



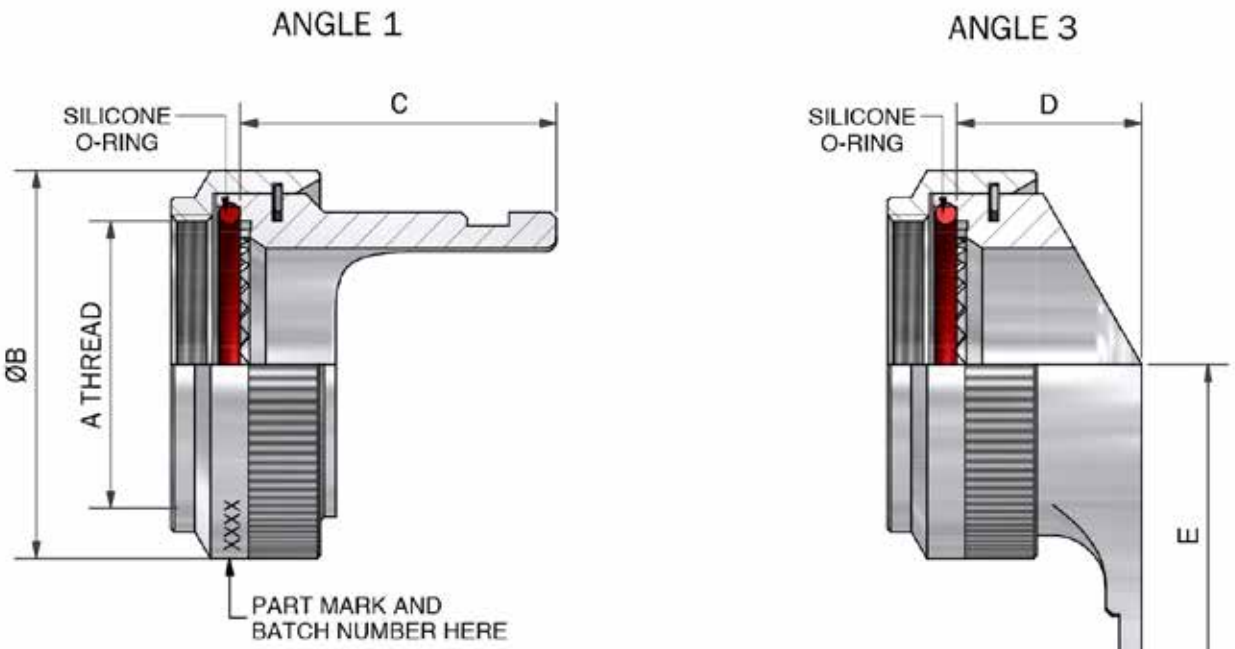


TABLE 1

| SHELL SIZE | A THREAD | ØB MAX | C MAX | D MAX | E MAX |
|---|---|---|---|---|---|
| 09 | M12 x 1.0 | 18,0 | 24,0 | 14,0 | 14,5 |
| 11 | M15 x 1.0 | 21,0 | 24,0 | 14,0 | 17,9 |
| 13 | M18 x 1.0 | 24,5 | 26,0 | 16,0 | 20,8 |
| 15 | M22 x 1.0 | 29,0 | 26,0 | 16,0 | 25,7 |
| 17 | M25 x 1.0 | 32,5 | 27,0 | 16,0 | 29,0 |
| 19 | M28 x 1.0 | 35,5 | 30,0 | 16,0 | 32,2 |
| 21 | M31 x 1.0 | 37,0 | 37,0 | 20,0 | 33,5 |
| 23 | M34 x 1.0 | 40,0 | 40,0 | 20,0 | 36,7 |
| 25 | M37 x 1.0 | 43,5 | 40,0 | 20,0 | 39,6 |

TABLE 2

| CODE | FINISH |
|---|---|
| C | ELECTROLESS NICKEL |
| B | CADMIUM OLIVE DRAB OVER ELECTROLESS NICKEL |
| ZB | ZINC COBALT OLIVE DRAB OVER ELECTROLESS NICKEL |
| ZN | ZINC NICKEL BLACK PASSIVATE OVER ELECTROLESS NICKEL |
| G | BLACK ANODISE, SULPHURIC |

LIST NOT EXHAUSTIVE, SEE PLATING TABLE FOR OTHER OPTIONS

86H1-17-1-C

- SERIES
- CONNECTOR INTERFACE
- ANGLE
- SHELL SIZE (TABLE 1)
- MATERIAL
  - ALUMINIUM ALLOY
- FINISH (TABLE 2)

DRAWING NOT TO SCALE, DIMENSIONS IN MM

See pages 18-26 for complete list of available materials, finishes and Connector interfaces
(dimensions, form and O Ring subject to change depending on Backshell material and Connector interface)

DRAWING NOT TO SCALE
DIMENSIONS IN MM

THIS DRAWING IS THE PROPERTY OF POLAMCO LTD AND MUST NOT BE USED FOR COMMERCIAL PURPOSES WITHOUT WRITTEN CONSENT OF THE COMPANY

# 86F (ET) - Tie Post Backshell Earth Tag Option

## Interface F - MIL-DTL-38999 SERIES I & II

Polamco

**Interconnect Solutions Worldwide**

STRAIN RELIEF

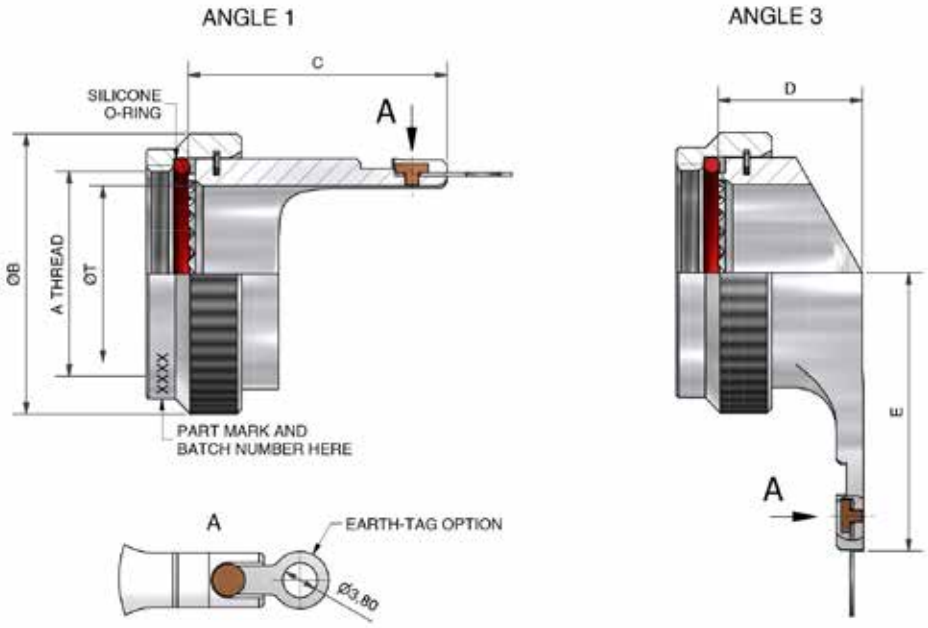


TABLE 1

| DASH NO. | SHELL SIZE SERIES I | SHELL SIZE SERIES II | A THREAD | ØB MAX | ØT MIN | C MAX | D MAX | E MAX |
|---|---|---|---|---|---|---|---|---|
| 08 | 09 | 08 | 7/16-28UNEF | 18,3 | 6,6 | 24,0 | 14,0 | 14,5 |
| 10 | 11 | 10 | 9/16-24UNEF | 21,5 | 10,1 | 24,0 | 14,0 | 17,9 |
| 12 | 13 | 12 | 11/16-24UNEF | 24,5 | 12,9 | 26,0 | 16,0 | 20,8 |
| 14 | 15 | 14 | 13/16-20UNEF | 27,8 | 16,1 | 26,0 | 16,0 | 25,7 |
| 16 | 17 | 16 | 15/16-20UNEF | 30,8 | 19,3 | 27,0 | 16,0 | 29,0 |
| 18 | 19 | 18 | 1 1/16-18UNEF | 34,1 | 21,7 | 30,0 | 16,0 | 32,2 |
| 20 | 21 | 20 | 1 3/16-18UNEF | 37,3 | 24,9 | 37,0 | 20,0 | 33,5 |
| 22 | 23 | 22 | 1 5/16-18UNEF | 40,5 | 28,1 | 40,0 | 20,0 | 36,7 |
| 24 | 25 | 24 | 1 7/16-18UNEF | 43,7 | 31,3 | 40,0 | 20,0 | 39,6 |

TABLE 2

| CODE | MATERIAL / PLATING |
|---|---|
| 1-C | ALUMINIUM / ELECTROLESS NICKEL |
| 1-B | ALUMINIUM / CADMIUM OLIVE DRAB OVER ELECTROLESS NICKEL |
| 1-ZB | ALUMINIUM / ZINC COBALT OLIVE DRAB OVER ELECTROLESS NICKEL |
| 1-ZN | ALUMINIUM / ZINC NICKEL BLACK PASSIVATE OVER ELECTROLESS NICKEL |
| 4-J | STAINLESS STEEL / PASSIVATE |
| 2-Z | NICKEL ALUMINIUM BRONZE / SHOT BLAST |

LIST NOT EXHAUSTIVE, SEE PLATING TABLE FOR OTHER OPTIONS

86F1-16-1-C-ET

SERIES
CONNECTOR INTERFACE
ANGLE
DASH NO. (TABLE 1)
MATERIAL (TABLE 2)
FINISH (TABLE 2)
EARTH TAG OPTION

DRAWING NOT TO SCALE, DIMENSIONS IN MM

See pages 18-26 for complete list of available materials, finishes and Connector interfaces
(dimensions, form and O Ring subject to change depending on Backshell material and Connector interface)



THIS DRAWING IS THE PROPERTY OF POLAMCO LTD AND MUST NOT BE USED FOR COMMERCIAL PURPOSES WITHOUT WRITTEN CONSENT OF THE COMPANY

# 86H (ET) - Tie Post Backshell Earth Tag Option

## Interface H - MIL-DTL-38999 SERIES III & IV

Polamco

**Interconnect Solutions Worldwide**

STRAIN RELIEF

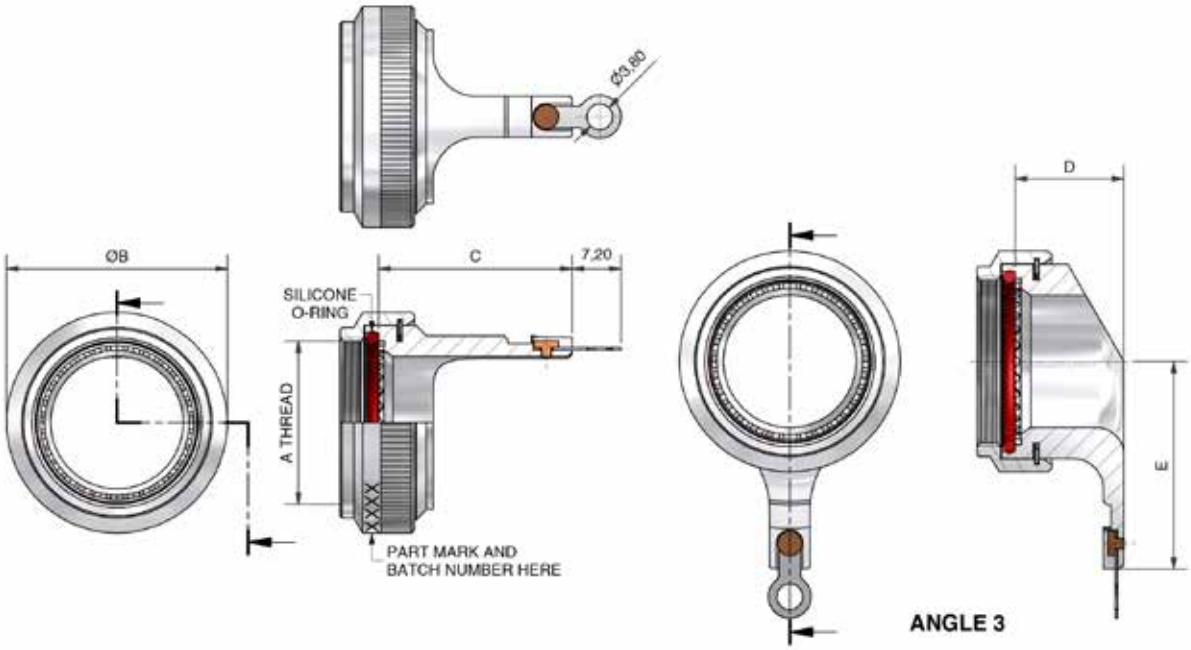


TABLE 1

| SHELL SIZE | A THREAD | ØB MAX | C MAX | D MAX | E MAX |
|---|---|---|---|---|---|
| 09 | M12 x 1.0 | 18,0 | 26,0 | 14,0 | 16,5 |
| 11 | M15 x 1.0 | 21,0 | 26,0 | 14,0 | 19,9 |
| 13 | M18 x 1.0 | 24,5 | 26,0 | 16,0 | 22,8 |
| 15 | M22 x 1.0 | 29,0 | 26,0 | 16,0 | 27,7 |
| 17 | M25 x 1.0 | 32,5 | 29,0 | 16,0 | 31,0 |
| 19 | M28 x 1.0 | 35,5 | 32,0 | 16,0 | 34,2 |
| 21 | M31 x 1.0 | 37,0 | 39,0 | 20,0 | 35,5 |
| 23 | M34 x 1.0 | 40,0 | 42,0 | 20,0 | 38,7 |
| 25 | M37 x 1.0 | 43,5 | 42,0 | 20,0 | 41,6 |

TABLE 2

| CODE | MATERIAL / FINISH |
|---|---|
| 1-C | ALUMINIUM / ELECTROLESS NICKEL |
| 1-B | ALUMINIUM / CADMIUM OLIVE DRAB OVER ELECTROLESS NICKEL |
| 1-ZB | ALUMINIUM / ZINC COBALT OLIVE DRAB OVER ELECTROLESS NICKEL |
| 1-ZN | ALUMINIUM / ZINC NICKEL BLACK PASSIVATE OVER ELECTROLESS NICKEL |
| 4-J | STAINLESS STEEL / PASSIVATE |
| 2-Z | NICKEL ALUMINIUM BRONZE / SHOT BLAST |

LIST NOT EXHAUSTIVE, SEE PLATING TABLE FOR OTHER OPTIONS

86H1-17-1-C-ET

- SERIES
- CONNECTOR INTERFACE
- ANGLE
- SHELL SIZE (TABLE 1)
- MATERIAL (TABLE 2)
- FINISH (TABLE 2)
- EARTH TAG VERSION

DRAWING NOT TO SCALE, DIMENSIONS IN MM

See pages 18-26 for complete list of available materials, finishes and Connector interfaces
(dimensions, form and O Ring subject to change depending on Backshell material and Connector interface)

THIS DRAWING IS THE PROPERTY OF POLAMCO LTD AND MUST NOT BE USED FOR COMMERCIAL PURPOSES WITHOUT WRITTEN CONSENT OF THE COMPANY

# 97F - Heat Shrink Boot Backshell

## Interface F - MIL-DTL-38999 SERIES I

Polamco

**Interconnect Solutions Worldwide**

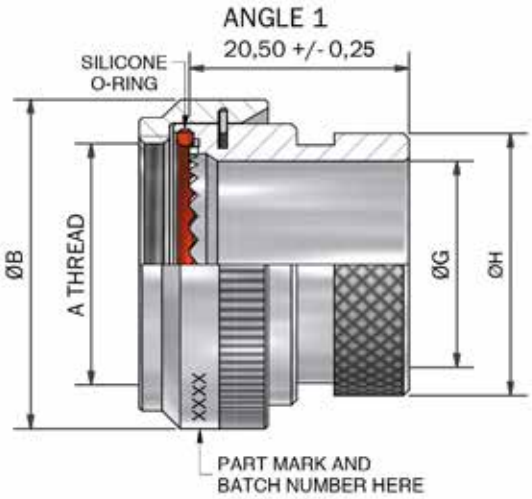


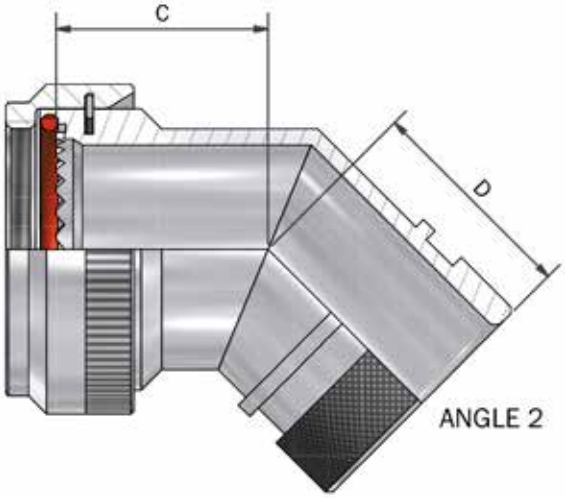


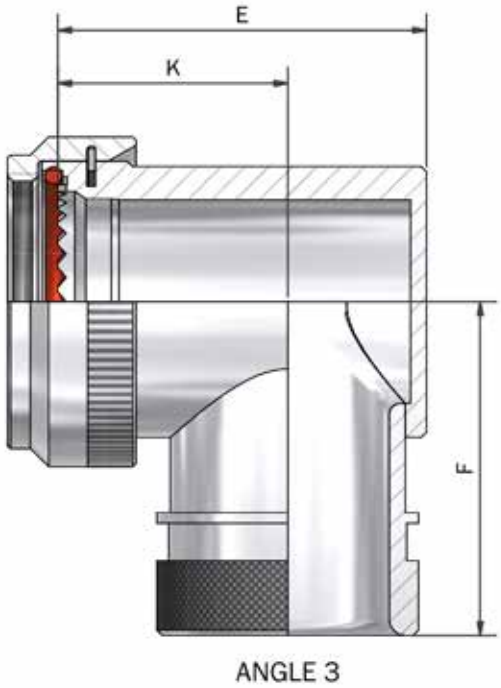


HEAT SHRINK BOOT

See pages 18-26 for complete list of available materials, finishes and Connector interfaces
(dimensions, form and O Ring subject to change depending on Backshell material and Connector interface)



THIS DRAWING IS THE PROPERTY OF POLAMCO LTD AND MUST NOT BE USED FOR COMMERCIAL PURPOSES WITHOUT WRITTEN CONSENT OF THE COMPANY

# 97F - Heat Shrink Boot Backshell

## Interface F - MIL-DTL-38999 SERIES I

Polamco

**Interconnect Solutions Worldwide**

TABLE 1

| SHELL SIZE | A THREAD | ØB MAX | ØG MIN | ØH MAX | C ±0,5 | D MAX | E MAX | F MAX | K ±0,5 | RECOMMENDED BOOT SIZE |
|---|---|---|---|---|---|---|---|---|---|---|
| 09 | 7/16-28 UNEF | 18,0 | 6,8 | 13,5 | 16,4 | 17,6 | 22,7 | 25,5 | 15,0 | 152-42 |
| 11 | 9/16-24 UNEF | 21,0 | 10,2 | 15,4 | 17,2 | 18,4 | 26,2 | 27,3 | 17,0 | 152-42 |
| 13 | 11/16-24 UNEF | 24,5 | 13,1 | 19,7 | 17,6 | 19,3 | 29,2 | 28,7 | 18,0 | 155-42 |
| 15 | 13/16-20 UNEF | 27,8 | 16,2 | 21,3 | 18,5 | 19,6 | 32,2 | 30,2 | 20,0 | 155-42 |
| 17 | 15/16-20 UNEF | 30,8 | 19,3 | 24,5 | 19,2 | 20,4 | 35,7 | 31,9 | 21,5 | 156-42 |
| 19 | 1 1/16-18 UNEF | 34,1 | 22,3 | 26,5 | 19,6 | 20,8 | 39,7 | 33,5 | 23,0 | 156-42 |
| 21 | 1 3/16-18 UNEF | 37,3 | 25,8 | 31,0 | 20,4 | 21,6 | 42,2 | 35,1 | 25,0 | 156-42 |
| 23 | 1 5/16-18 UNEF | 41,0 | 28,3 | 34,4 | 20,8 | 22,5 | 45,2 | 36,7 | 26,0 | 157-43 |
| 25 | 1 7/16-18 UNEF | 43,7 | 31,5 | 36,6 | 21,7 | 22,9 | 48,2 | 38,1 | 28,0 | 157-43 |

TABLE 3

| CODE | FINISH |
|---|---|
| C | ELECTROLESS NICKEL |
| B | CADMIUM OLIVE DRAB OVER ELECTROLESS NICKEL |
| ZB | ZINC COBALT OLIVE DRAB OVER ELECTROLESS NICKEL |
| ZN | ZINC NICKEL BLACK PASSIVATE OVER ELECTROLESS NICKEL |
| G | BLACK ANODISE, SULPHURIC |

LIST NOT EXHAUSTIVE, SEE PLATING TABLE FOR OTHER OPTIONS

97F1-17-1-C

SERIES
CONNECTOR INTERFACE
ANGLE
SHELL SIZE (TABLE 1)
MATERIAL
ALUMINIUM ALLOY
FINISH (TABLE 2)

Sealing and strain relief achieved with Heat Shrink Boot (see page 354)
Adhesive if required for assembly (see page 352)

DRAWING NOT TO SCALE, DIMENSIONS IN MM

See pages 18-26 for complete list of available materials, finishes and Connector interfaces
(dimensions, form and O Ring subject to change depending on Backshell material and Connector interface)



THIS DRAWING IS THE PROPERTY OF POLAMCO LTD AND MUST NOT BE USED FOR
COMMERCIAL PURPOSES WITHOUT WRITTEN CONSENT OF THE COMPANY

# 97F - Heat Shrink Boot Backshell

## Interface F - MIL-DTL-38999 SERIES II

Polamco

**Interconnect Solutions Worldwide**

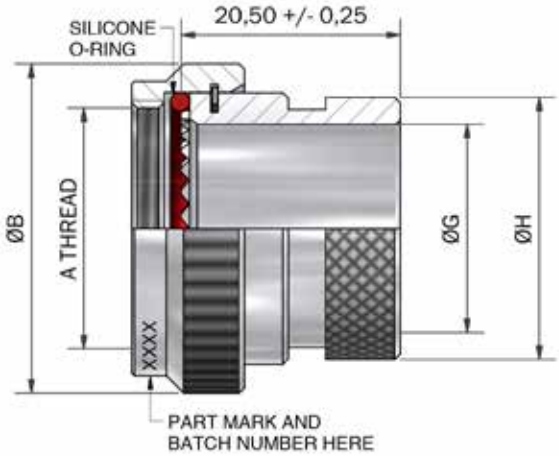


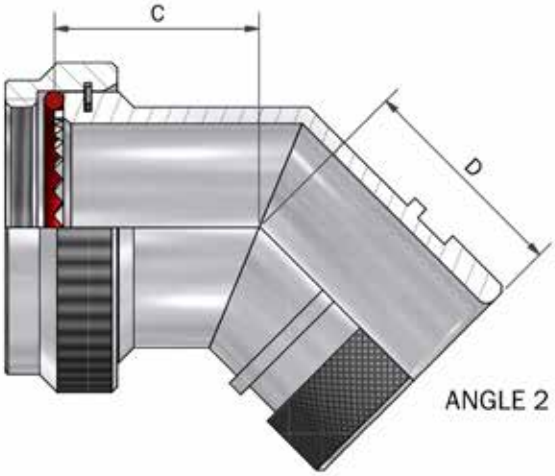


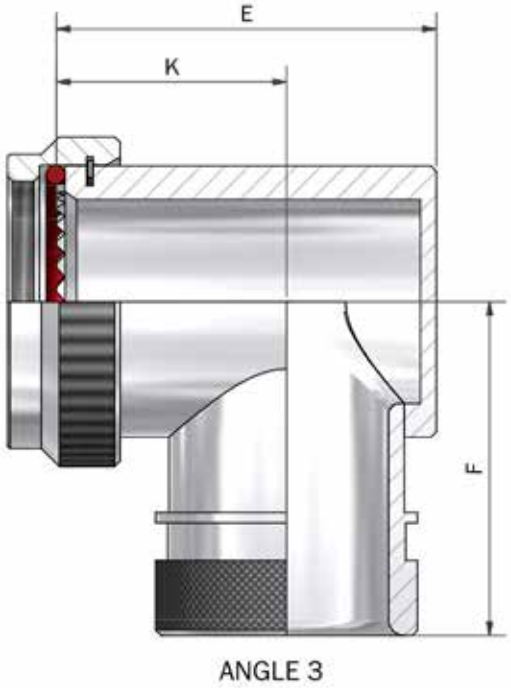


HEAT SHRINK BOOT

See pages 18-26 for complete list of available materials, finishes and Connector interfaces
(dimensions, form and O Ring subject to change depending on Backshell material and Connector interface)



THIS DRAWING IS THE PROPERTY OF POLAMCO LTD AND MUST NOT BE USED FOR COMMERCIAL PURPOSES WITHOUT WRITTEN CONSENT OF THE COMPANY

# 97F - Heat Shrink Boot Backshell

## Interface F - MIL-DTL-38999 SERIES II

Polamco

**Interconnect Solutions Worldwide**

TABLE 1

| SHELL SIZE | A THREAD | ØB MAX | ØG MIN | ØH MAX | C ±0,5 | D MAX | E MAX | F MAX | K ±0,5 | RECOMMENDED BOOT SIZE |
|---|---|---|---|---|---|---|---|---|---|---|
| 08 | 7/16-28 UNEF | 18,3 | 6,6 | 13,5 | 16,4 | 17,6 | 22,7 | 25,5 | 15,0 | 152-42 |
| 10 | 9/16-24 UNEF | 21,5 | 10,1 | 15,4 | 17,2 | 18,4 | 26,2 | 27,3 | 17,0 | 152-42 |
| 12 | 11/16-24 UNEF | 24,5 | 12,9 | 19,7 | 17,6 | 19,3 | 29,2 | 28,7 | 18,0 | 155-42 |
| 14 | 13/16-20 UNEF | 27,8 | 16,1 | 21,3 | 18,5 | 19,6 | 32,2 | 30,2 | 20,0 | 155-42 |
| 16 | 15/16-20 UNEF | 30,8 | 19,3 | 24,5 | 19,2 | 20,4 | 35,7 | 31,9 | 21,5 | 156-42 |
| 18 | 1 1/16-18 UNEF | 34,1 | 21,7 | 26,5 | 19,6 | 20,8 | 39,7 | 33,5 | 23,0 | 156-42 |
| 20 | 1 3/16-18 UNEF | 37,3 | 24,9 | 31,0 | 20,4 | 21,6 | 42,2 | 35,1 | 25,0 | 156-42 |
| 22 | 1 5/16-18 UNEF | 40,5 | 28,1 | 34,4 | 20,8 | 22,5 | 45,2 | 36,7 | 26,0 | 157-43 |
| 24 | 1 7/16-18 UNEF | 43,7 | 31,3 | 36,6 | 21,7 | 22,9 | 48,2 | 38,1 | 28,0 | 157-43 |

TABLE 2

| CODE | FINISH |
|---|---|
| C | ELECTROLESS NICKEL |
| B | CADMIUM OLIVE DRAB OVER ELECTROLESS NICKEL |
| ZB | ZINC COBALT OLIVE DRAB OVER ELECTROLESS NICKEL |
| ZN | ZINC NICKEL BLACK PASSIVATE OVER ELECTROLESS NICKEL |
| G | BLACK ANODISE, SULPHURIC |

LIST NOT EXHAUSTIVE, SEE PLATING TABLE FOR OTHER OPTIONS

97F1-16-1-C

SERIES
CONNECTOR INTERFACE
ANGLE
SHELL SIZE (TABLE 1)
MATERIAL
ALUMINIUM ALLOY
FINISH (TABLE 2)

Sealing and strain relief achieved with Heat Shrink Boot (see page 354)
Adhesive if required for assembly (see page 352)

DRAWING NOT TO SCALE, DIMENSIONS IN MM

See pages 18-26 for complete list of available materials, finishes and Connector interfaces
(dimensions, form and O Ring subject to change depending on Backshell material and Connector interface)

THIS DRAWING IS THE PROPERTY OF POLAMCO LTD AND MUST NOT BE USED FOR COMMERCIAL PURPOSES WITHOUT WRITTEN CONSENT OF THE COMPANY

# 97H - Heat Shrink Boot Backshell

## Interface H - MIL-DTL-38999 SERIES III & IV

Polamco

**Interconnect Solutions Worldwide**

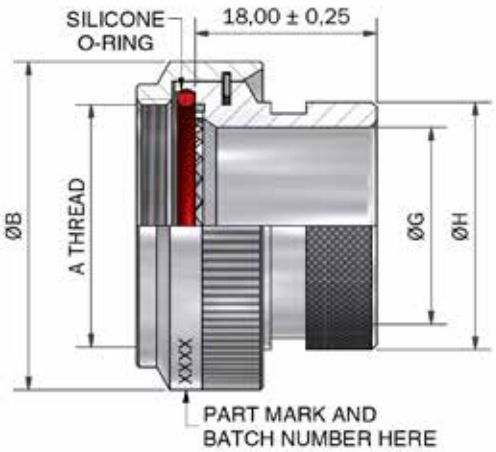


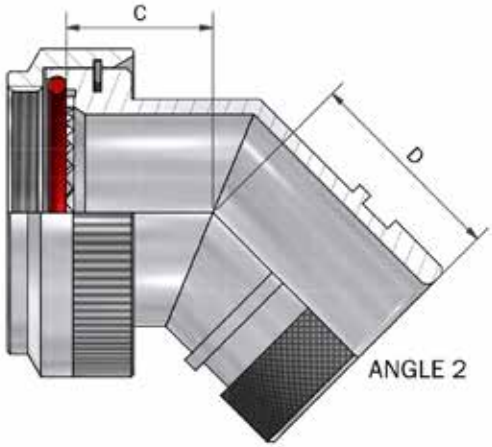


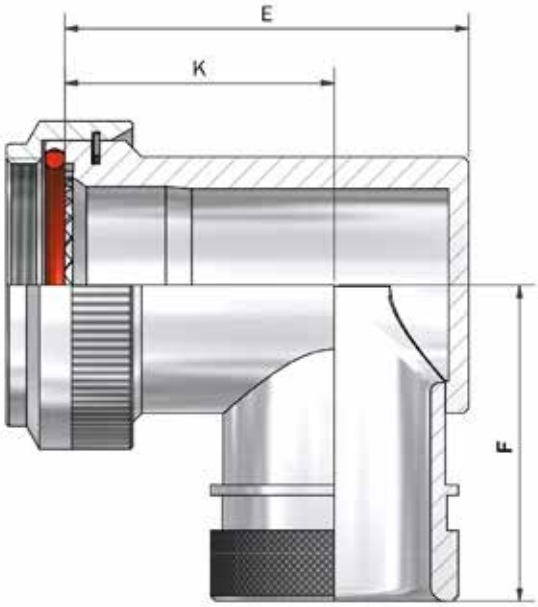


DRAWING NOT TO SCALE, DIMENSIONS IN MM

See pages 18-26 for complete list of available materials, finishes and Connector interfaces
(dimensions, form and O Ring subject to change depending on Backshell material and Connector interface)





THIS DRAWING IS THE PROPERTY OF POLAMCO LTD AND MUST NOT BE USED FOR COMMERCIAL PURPOSES WITHOUT WRITTEN CONSENT OF THE COMPANY

# 97H - Heat Shrink Boot Backshell

## Interface H - MIL-DTL-38999 SERIES III & IV

Polamco

**Interconnect Solutions Worldwide**

TABLE 1

| SHELL SIZE | A THREAD | ØB MAX | ØG MIN | ØH MAX | C MAX | D MAX | E MAX | F MAX | K ±0,5 | RECOMMENDED BOOT SIZE |
|---|---|---|---|---|---|---|---|---|---|---|
| 09 | M12 x 1.0 | 18,0 | 6,8 | 13,5 | 13,1 | 17,6 | 25,7 | 25,5 | 17,5 | 152-42 |
| 11 | M15 x 1.0 | 21,0 | 10,3 | 15,4 | 13,9 | 18,4 | 26,7 | 27,3 | 17,5 | 152-42 |
| 13 | M18 x 1.0 | 24,5 | 13,6 | 19,7 | 14,5 | 19,3 | 31,2 | 28,7 | 20,0 | 155-42 |
| 15 | M22 x 1.0 | 29,0 | 16,3 | 21,3 | 15,5 | 19,6 | 37,2 | 30,2 | 24,5 | 155-42 |
| 17 | M25 x 1.0 | 32,5 | 19,5 | 24,5 | 16,1 | 20,4 | 40,2 | 31,9 | 26,7 | 156-42 |
| 19 | M28 x 1.0 | 35,5 | 21,9 | 26,5 | 16,8 | 20,8 | 44,7 | 33,5 | 27,0 | 156-42 |
| 21 | M31 x 1.0 | 37,0 | 25,2 | 31,0 | 17,1 | 21,6 | 49,2 | 35,1 | 30,5 | 156-42 |
| 23 | M34 x 1.0 | 40,0 | 28,3 | 34,4 | 17,7 | 22,5 | 51,7 | 36,7 | 31,5 | 157-43 |
| 25 | M37 x 1.0 | 43,5 | 31,5 | 36,6 | 18,4 | 22,9 | 53,2 | 38,1 | 28,5 | 157-43 |

TABLE 2

| CODE | FINISH |
|---|---|
| C | ELECTROLESS NICKEL |
| B | CADMIUM OLIVE DRAB OVER ELECTROLESS NICKEL |
| ZB | ZINC COBALT OLIVE DRAB OVER ELECTROLESS NICKEL |
| ZN | ZINC NICKEL BLACK PASSIVATE OVER ELECTROLESS NICKEL |
| G | BLACK ANODISE, SULPHURIC |

LIST NOT EXHAUSTIVE, SEE PLATING TABLE FOR OTHER OPTIONS

97H1-17-1-C

SERIES
CONNECTOR INTERFACE
ANGLE
SHELL SIZE (TABLE 1)
MATERIAL
ALUMINIUM ALLOY
FINISH (TABLE 2)

Sealing and strain relief achieved with Heat Shrink Boot (see page 354)
Adhesive if required for assembly (see page 352)

DRAWING NOT TO SCALE, DIMENSIONS IN MM

See pages 18-26 for complete list of available materials, finishes and Connector interfaces
(dimensions, form and O Ring subject to change depending on Backshell material and Connector interface)

THIS DRAWING IS THE PROPERTY OF POLAMCO LTD AND MUST NOT BE USED FOR COMMERCIAL PURPOSES WITHOUT WRITTEN CONSENT OF THE COMPANY

# 97 (SS) - Heat Shrink Boot Backshell Stainless Steel

## Interface H - MIL-DTL-38999 SERIES III & IV

Polamco

**Interconnect Solutions Worldwide**

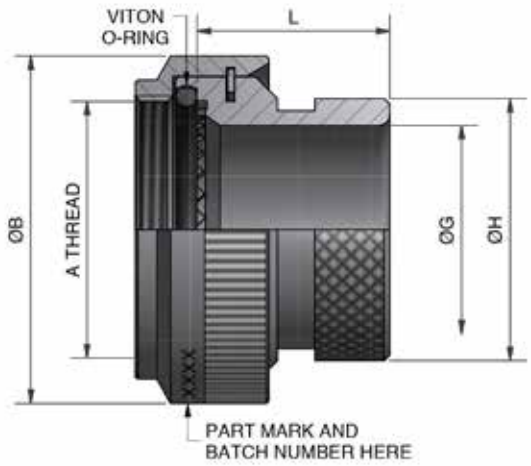


ANGLE 1

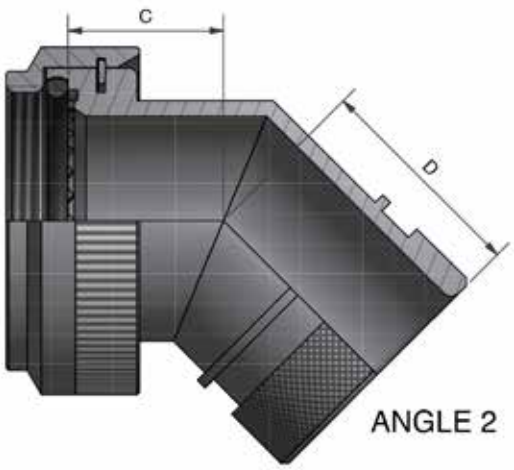


ANGLE 2

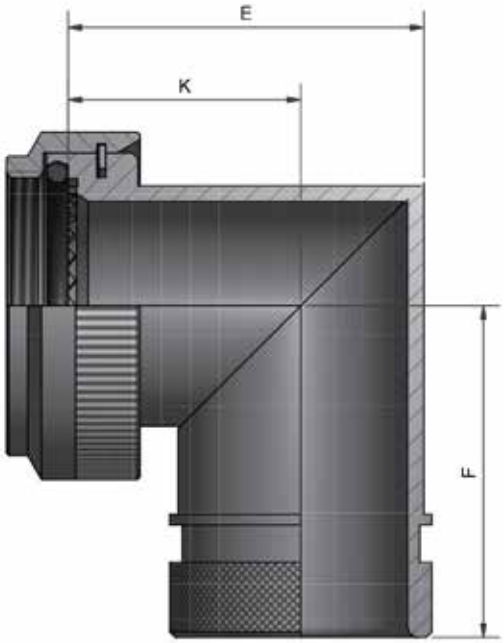


ANGLE 3

DRAWING NOT TO SCALE, DIMENSIONS IN MM

See pages 18-26 for complete list of available materials, finishes and Connector interfaces
(dimensions, form and O Ring subject to change depending on Backshell material and Connector interface)





THIS DRAWING IS THE PROPERTY OF POLAMCO LTD AND MUST NOT BE USED FOR COMMERCIAL PURPOSES WITHOUT WRITTEN CONSENT OF THE COMPANY

# 97 (SS) - Heat Shrink Boot Backshell Stainless Steel

## Interface H - MIL-DTL-38999 SERIES III & IV

Polamco

**Interconnect Solutions Worldwide**

TABLE 1

| SHELL SIZE | A THREAD | ØB MAX | ØG MIN | ØH MAX | C MAX | D MAX | E MAX | F MAX | K ±0,5 |
|---|---|---|---|---|---|---|---|---|---|
| 09 | M12 x 1.0 | 18,0 | 6,6 | 13,5 | 13,1 | 17,6 | 21,4 | 27,3 | 16,3 |
| 11 | M15 x 1.0 | 21,0 | 10,1 | 15,4 | 13,9 | 18,4 | 24,5 | 27,4 | 17,2 |
| 13 | M18 x 1.0 | 24,5 | 13,4 | 19,7 | 14,5 | 19,3 | 28,5 | 29,2 | 19,4 |
| 15 | M22 x 1.0 | 29,0 | 16,1 | 21,3 | 15,5 | 19,6 | 31,3 | 28,9 | 21,0 |
| 17 | M25 x 1.0 | 32,5 | 19,3 | 24,5 | 16,1 | 20,4 | 34,4 | 31,8 | 22,8 |
| 19 | M28 x 1.0 | 35,5 | 21,7 | 26,5 | 16,8 | 20,8 | 38,7 | 33,5 | 25,3 |
| 21 | M31 x 1.0 | 37,0 | 25,0 | 31,0 | 17,1 | 21,6 | 40,9 | 35,0 | 26,1 |
| 23 | M34 x 1.0 | 40,0 | 28,1 | 34,4 | 17,7 | 22,5 | 43,9 | 36,4 | 27,6 |
| 25 | M37 x 1.0 | 43,5 | 31,3 | 36,6 | 18,4 | 22,9 | 46,6 | 37,7 | 29,1 |

TABLE 2

| CODE | MATERIAL / FINISH |
|---|---|
| 4-J | STAINLESS STEEL 303S31 / PASSIVATE |
| 46-J | STAINLESS STEEL 316 / PASSIVATE |

LIST NOT EXHAUSTIVE, SEE PLATING TABLE FOR OTHER OPTIONS

97H1-17-4-J-L35

SERIES
CONNECTOR INTERFACE
ANGLE
SHELL SIZE (TABLE 1)
MATERIAL (TABLE 2)
FINISH (TABLE 2)
LENGTH CODE IN mm (STRAIGHT ONLY)
OMIT FOR STANDARD 18,00mm

Sealing and strain relief achieved with Heat Shrink Boot (see page 354)
Adhesive if required for assembly (see page 352)

DRAWING NOT TO SCALE, DIMENSIONS IN MM

See pages 18-26 for complete list of available materials, finishes and Connector interfaces
(dimensions, form and O Ring subject to change depending on Backshell material and Connector interface)

THIS DRAWING IS THE PROPERTY OF POLAMCO LTD AND MUST NOT BE USED FOR COMMERCIAL PURPOSES WITHOUT WRITTEN CONSENT OF THE COMPANY

# 97 (NB) - Heat Shrink Boot Backshell
# Nickel Aluminium Bronze

## Interface H - MIL-DTL-38999 SERIES III & IV

Polamco

**Interconnect Solutions Worldwide**



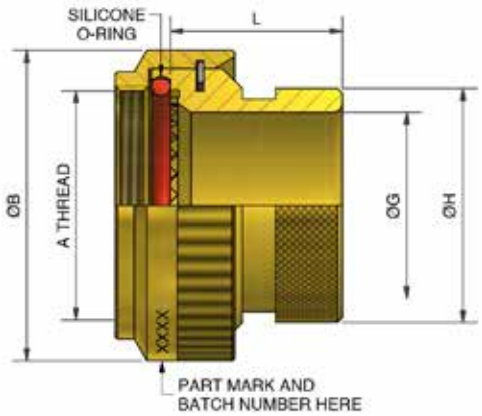


ANGLE 1

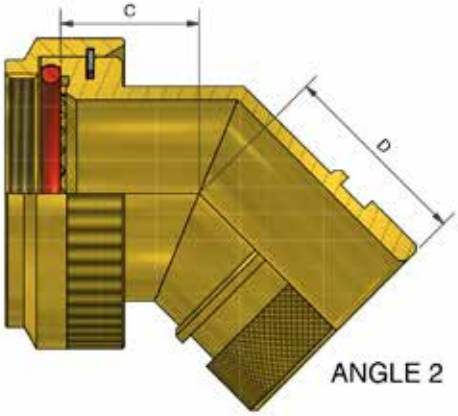


ANGLE 2

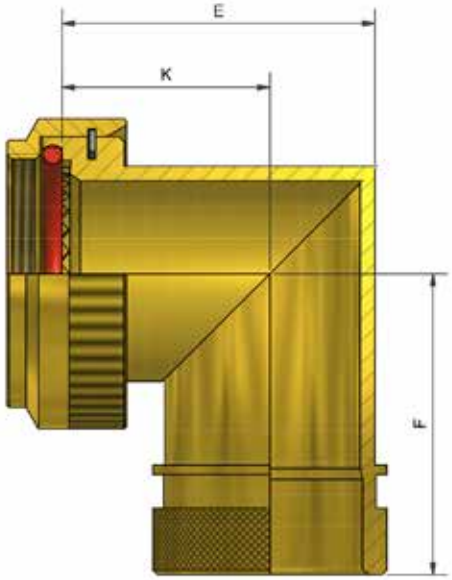


ANGLE 3

DRAWING NOT TO SCALE, DIMENSIONS IN MM

See pages 18-26 for complete list of available materials, finishes and Connector interfaces
(dimensions, form and O Ring subject to change depending on Backshell material and Connector interface)



THIS DRAWING IS THE PROPERTY OF POLAMCO LTD AND MUST NOT BE USED FOR COMMERCIAL PURPOSES WITHOUT WRITTEN CONSENT OF THE COMPANY

# 97 (NB) - Heat Shrink Boot Backshell Nickel Aluminium Bronze

## Interface H - MIL-DTL-38999 SERIES III & IV

Polamco

**Interconnect Solutions Worldwide**

TABLE 1

| SHELL SIZE | A THREAD | ØB MAX | ØG MIN | ØH MAX | C MAX | D MAX | E MAX | F MAX | K ±0,5 |
|---|---|---|---|---|---|---|---|---|---|
| 09 | M12 x 1.0 | 18,0 | 6,6 | 13,5 | 13,1 | 17,6 | 21,4 | 25,5 | 16,3 |
| 11 | M15 x 1.0 | 21,0 | 10,1 | 15,4 | 13,9 | 18,4 | 24,5 | 27,3 | 17,2 |
| 13 | M18 x 1.0 | 24,5 | 13,4 | 19,7 | 14,5 | 19,3 | 28,5 | 28,7 | 19,4 |
| 15 | M22 x 1.0 | 29,0 | 16,1 | 21,3 | 15,5 | 19,6 | 31,3 | 30,2 | 21,0 |
| 17 | M25 x 1.0 | 32,5 | 19,3 | 24,5 | 16,1 | 20,4 | 34,4 | 31,9 | 22,8 |
| 19 | M28 x 1.0 | 35,5 | 21,7 | 26,5 | 16,8 | 20,8 | 38,7 | 33,5 | 25,3 |
| 21 | M31 x 1.0 | 37,0 | 25,0 | 31,0 | 17,1 | 21,6 | 40,9 | 35,1 | 26,1 |
| 23 | M34 x 1.0 | 40,0 | 28,1 | 34,4 | 17,7 | 22,5 | 43,9 | 36,7 | 27,6 |
| 25 | M37 x 1.0 | 43,5 | 31,3 | 36,6 | 18,4 | 22,9 | 46,6 | 38,1 | 29,1 |

97H1-17-2-Z-L35

- SERIES
- CONNECTOR INTERFACE
- ANGLE
- SHELL SIZE (TABLE 1)
- MATERIAL
  - NICKEL ALUMINIUM BRONZE
- FINISH
  - SHOT BLAST
- LENGTH CODE IN mm (STRAIGHT ONLY)
  - OMIT FOR STANDARD 18,00mm

Sealing and strain relief achieved with Heat Shrink Boot (see page 354)
Adhesive if required for assembly (see page 352)

DRAWING NOT TO SCALE, DIMENSIONS IN MM

See pages 18-26 for complete list of available materials, finishes and Connector interfaces
(dimensions, form and O Ring subject to change depending on Backshell material and Connector interface)

THIS DRAWING IS THE PROPERTY OF POLAMCO LTD AND MUST NOT BE USED FOR COMMERCIAL PURPOSES WITHOUT WRITTEN CONSENT OF THE COMPANY

# 97F (ET) - Heat Shrink Boot Backshell Earth Tag Option

## Interface F - MIL-DTL-38999 SERIES I

Polamco

**Interconnect Solutions Worldwide**



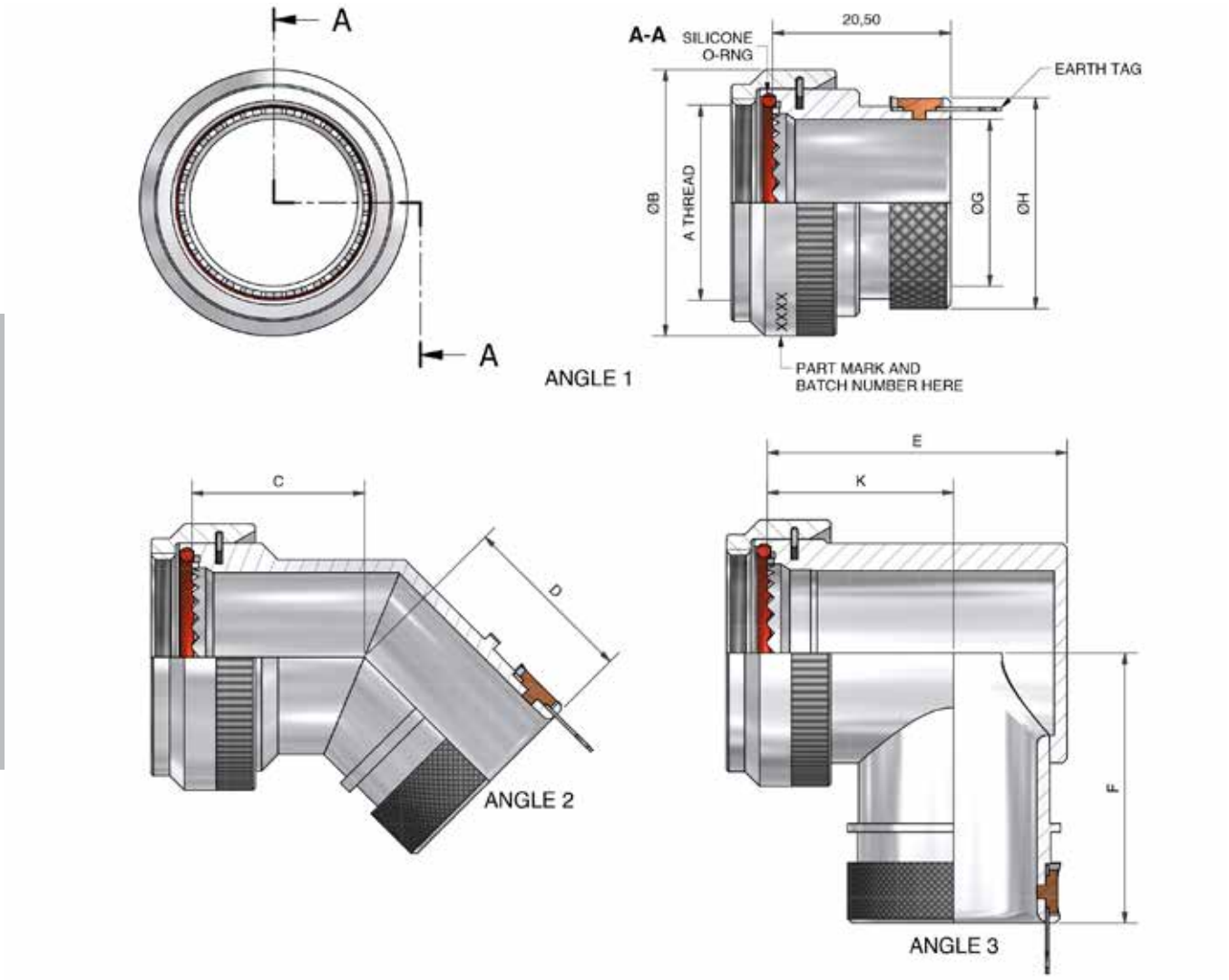


DRAWING NOT TO SCALE, DIMENSIONS IN MM

See pages 18-26 for complete list of available materials, finishes and Connector interfaces
(dimensions, form and O Ring subject to change depending on Backshell material and Connector interface)



THIS DRAWING IS THE PROPERTY OF POLAMCO LTD AND MUST NOT BE USED FOR COMMERCIAL PURPOSES WITHOUT WRITTEN CONSENT OF THE COMPANY

# 97F (ET) - Heat Shrink Boot Backshell Earth Tag Option

## Interface F - MIL-DTL-38999 SERIES I

Polamco

**Interconnect Solutions Worldwide**

TABLE 1

| SHELL SIZE | A THREAD | ØB MAX | ØG MIN | ØH MAX | C ± 0,5 | D MAX | E MAX | F MAX | K ±0,5 | RECOMMENDED BOOTSIZE |
|---|---|---|---|---|---|---|---|---|---|---|
| 09 | 7/16-28UNEF | 18,0 | 6,8 | 13,5 | 16,4 | 17,6 | 22,7 | 25,5 | 15,0 | 152-42 |
| 11 | 9/16-24UNEF | 21,0 | 10,2 | 15,4 | 17,2 | 18,4 | 26,2 | 27,3 | 17,0 | 152-42 |
| 13 | 11/16-24UNEF | 24,5 | 13,1 | 19,7 | 17,6 | 19,3 | 29,2 | 28,7 | 18,0 | 155-42 |
| 15 | 13/16-20UNEF | 27,8 | 16,2 | 21,3 | 18,5 | 19,6 | 32,2 | 30,2 | 20,0 | 155-42 |
| 17 | 15/16-20UNEF | 30,8 | 19,3 | 24,5 | 19,2 | 20,4 | 35,7 | 31,9 | 21,5 | 156-42 |
| 19 | 1 1/16-18UNEF | 34,1 | 22,3 | 26,5 | 19,6 | 20,8 | 39,7 | 33,5 | 23,0 | 156-42 |
| 21 | 1 3/16-18UNEF | 37,3 | 25,8 | 31,0 | 20,4 | 21,6 | 42,2 | 35,1 | 25,0 | 156-42 |
| 23 | 1 5/16-18UNEF | 41,0 | 28,3 | 34,4 | 20,8 | 22,5 | 45,2 | 36,7 | 26,0 | 157-43 |
| 25 | 1 7/16-18UNEF | 43,7 | 31,5 | 36,6 | 21,7 | 22,9 | 48,2 | 38,1 | 28,0 | 157-43 |

TABLE 2

| CODE | FINISH |
|---|---|
| C | ELECTROLESS NICKEL |
| B | CADMIUM OLIVE DRAB OVER ELECTROLESS NICKEL |
| ZB | ZINC COBALT OLIVE DRAB OVER ELECTROLESS NICKEL |
| ZN | ZINC NICKEL BLACK PASSIVATE OVER ELECTROLESS NICKEL |

LIST NOT EXHAUSTIVE, SEE PLATING TABLE FOR OTHER OPTIONS

97F1-17-1-C-ET

- SERIES
- CONNECTOR INTERFACE
- ANGLE
- SHELL SIZE (TABLE 1)
- MATERIAL
  - ALUMINIUM ALLOY
- FINISH (TABLE 2)
- EARTH TAG

HEAT SHRINK BOOT

Sealing and strain relief achieved with Heat Shrink Boot (see page 354)
Adhesive if required for assembly (see page 352)

DRAWING NOT TO SCALE, DIMENSIONS IN MM

See pages 18-26 for complete list of available materials, finishes and Connector interfaces
(dimensions, form and O Ring subject to change depending on Backshell material and Connector interface)

THIS DRAWING IS THE PROPERTY OF POLAMCO LTD AND MUST NOT BE USED FOR COMMERCIAL PURPOSES WITHOUT WRITTEN CONSENT OF THE COMPANY

# 97F (ET) - Heat Shrink Boot Backshell Earth Tag Option

## Interface F - MIL-DTL-38999 SERIES II

Polamco

**Interconnect Solutions Worldwide**

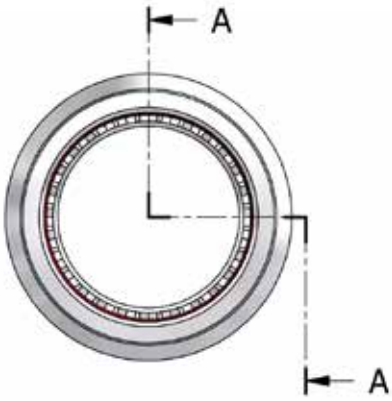


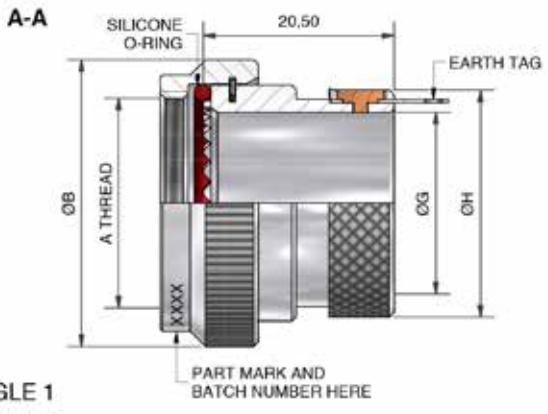


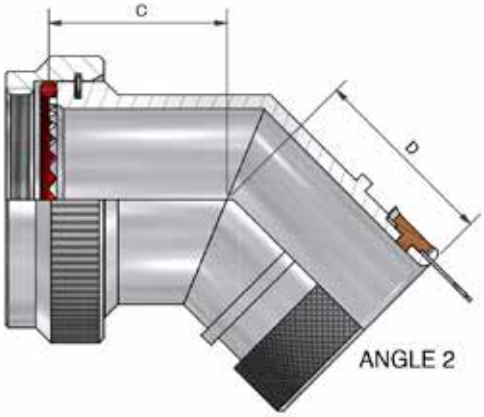


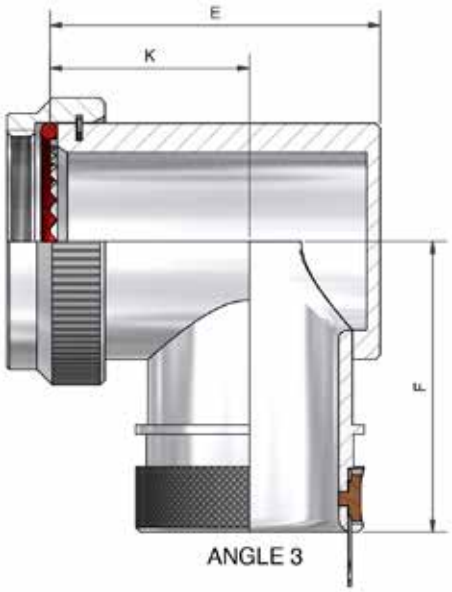


DRAWING NOT TO SCALE, DIMENSIONS IN MM

See pages 18-26 for complete list of available materials, finishes and Connector interfaces
(dimensions, form and O Ring subject to change depending on Backshell material and Connector interface)



THIS DRAWING IS THE PROPERTY OF POLAMCO LTD AND MUST NOT BE USED FOR COMMERCIAL PURPOSES WITHOUT WRITTEN CONSENT OF THE COMPANY

# 97F (ET) - Heat Shrink Boot Backshell Earth Tag Option

## Interface F - MIL-DTL-38999 SERIES II

Polamco

**Interconnect Solutions Worldwide**

TABLE 1

| SHELL SIZE | A THREAD | ØB MAX | ØG MIN | ØH MAX | C ± 0,5 | D MAX | E MAX | F MAX | K ±0,5 | RECOMMENDED BOOTSIZE |
|---|---|---|---|---|---|---|---|---|---|---|
| 08 | 7/16-28UNEF | 18,3 | 6,8 | 13,5 | 16,4 | 17,6 | 22,7 | 25,5 | 15,0 | 152-42 |
| 10 | 9/16-24UNEF | 21,5 | 10,2 | 15,4 | 17,2 | 18,4 | 26,2 | 27,3 | 17,0 | 152-42 |
| 12 | 11/16-24UNEF | 24,5 | 13,1 | 19,7 | 17,6 | 19,3 | 29,2 | 28,7 | 18,0 | 155-42 |
| 14 | 13/16-20UNEF | 27,8 | 16,2 | 21,3 | 18,5 | 19,6 | 32,2 | 30,2 | 20,0 | 155-42 |
| 16 | 15/16-20UNEF | 30,8 | 19,3 | 24,5 | 19,2 | 20,4 | 35,7 | 31,9 | 21,5 | 156-42 |
| 18 | 1 1/16-18UNEF | 34,1 | 22,3 | 26,5 | 19,6 | 20,8 | 39,7 | 33,5 | 23,0 | 156-42 |
| 20 | 1 3/16-18UNEF | 37,3 | 25,8 | 31,0 | 20,4 | 21,6 | 42,2 | 35,1 | 25,0 | 156-42 |
| 22 | 1 5/16-18UNEF | 40,5 | 28,3 | 34,4 | 20,8 | 22,5 | 45,2 | 36,7 | 26,0 | 157-43 |
| 24 | 1 7/16-18UNEF | 43,7 | 31,5 | 36,6 | 21,7 | 22,9 | 48,2 | 38,1 | 28,0 | 157-43 |

TABLE 2

| CODE | FINISH |
|---|---|
| C | ELECTROLESS NICKEL |
| B | CADMIUM OLIVE DRAB OVER ELECTROLESS NICKEL |
| ZB | ZINC COBALT OLIVE DRAB OVER ELECTROLESS NICKEL |
| ZN | ZINC NICKEL BLACK PASSIVATE OVER ELECTROLESS NICKEL |

LIST NOT EXHAUSTIVE, SEE PLATING TABLE FOR OTHER OPTIONS

97F1-16-1-C-ET

- SERIES
- CONNECTOR INTERFACE
- ANGLE
- SHELL SIZE (TABLE 1)
- MATERIAL
  - ALUMINIUM ALLOY
- FINISH (TABLE 2)
- EARTH TAG

HEAT SHRINK BOOT

Sealing and strain relief achieved with Heat Shrink Boot (see page 354)
Adhesive if required for assembly (see page 352)

DRAWING NOT TO SCALE, DIMENSIONS IN MM

See pages 18-26 for complete list of available materials, finishes and Connector interfaces
(dimensions, form and O Ring subject to change depending on Backshell material and Connector interface)

THIS DRAWING IS THE PROPERTY OF POLAMCO LTD AND MUST NOT BE USED FOR COMMERCIAL PURPOSES WITHOUT WRITTEN CONSENT OF THE COMPANY

# 97H (ET) - Heat Shrink Boot Backshell Earth Tag Option

## Interface H - MIL-DTL-38999 SERIES III & IV

Polamco

**Interconnect Solutions Worldwide**



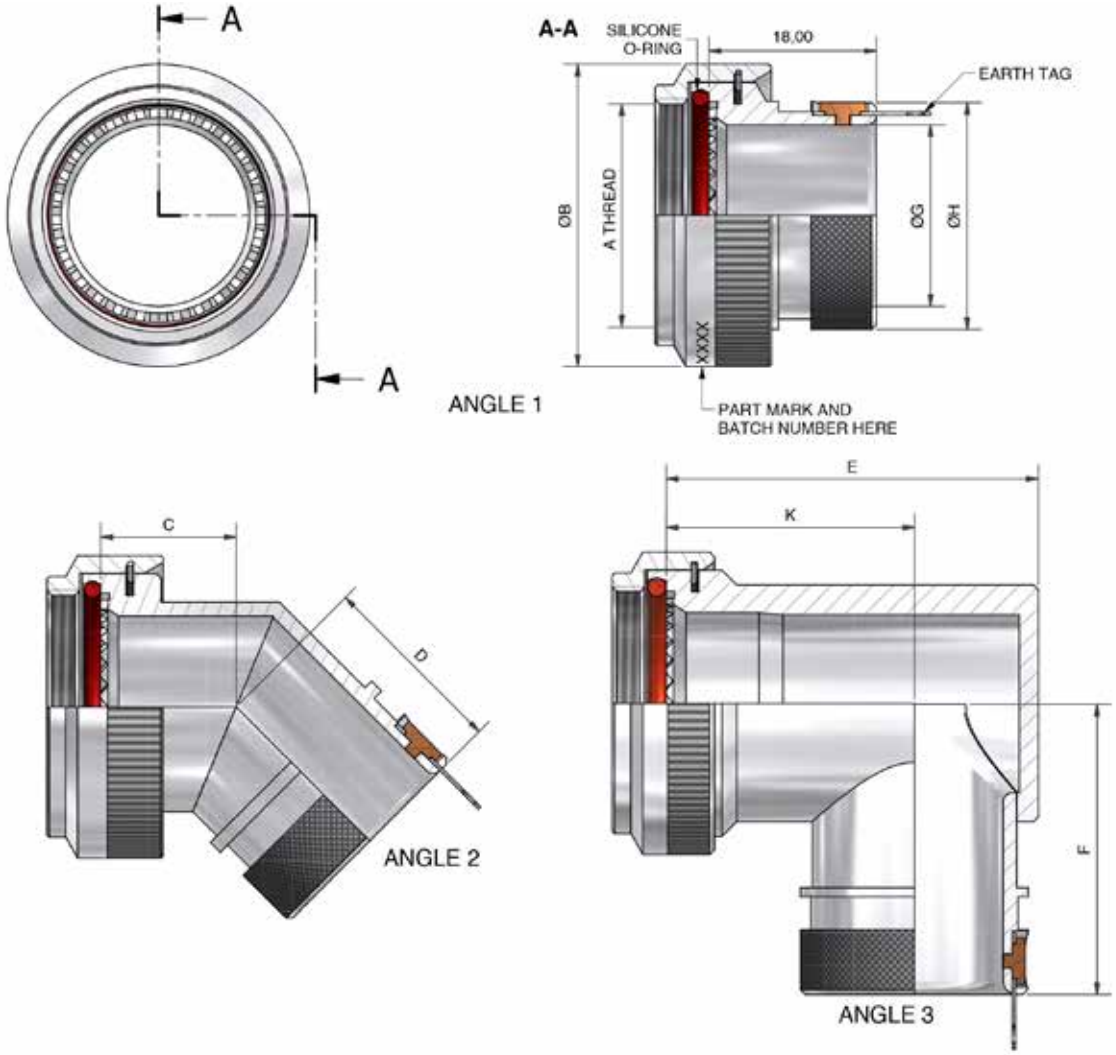


DRAWING NOT TO SCALE, DIMENSIONS IN MM

See pages 18-26 for complete list of available materials, finishes and Connector interfaces
(dimensions, form and O Ring subject to change depending on Backshell material and Connector interface)



THIS DRAWING IS THE PROPERTY OF POLAMCO LTD AND MUST NOT BE USED FOR COMMERCIAL PURPOSES WITHOUT WRITTEN CONSENT OF THE COMPANY

# 97H (ET) - Heat Shrink Boot Backshell Earth Tag Option

## Interface H - MIL-DTL-38999 SERIES III & IV

Polamco

**Interconnect Solutions Worldwide**

TABLE 1

| SHELL SIZE | A THREAD | ØB MAX | ØG MIN | ØH MAX | C ± 0,5 | D MAX | E MAX | F MAX | K ±0,5 | RECOMMENDED BOOTSIZE |
|---|---|---|---|---|---|---|---|---|---|---|
| 09 | M12x1.0 | 18,0 | 6,7 | 13,5 | 13,1 | 17,6 | 25,7 | 25,5 | 17,5 | 152-42 |
| 11 | M15x1.0 | 21,0 | 10,2 | 15,4 | 13,9 | 18,4 | 26,7 | 27,3 | 17,5 | 152-42 |
| 13 | M18x1.0 | 24,5 | 13,5 | 19,7 | 14,5 | 19,3 | 31,2 | 28,7 | 20,0 | 155-42 |
| 15 | M22x1.0 | 29,0 | 16,2 | 21,3 | 15,5 | 19,6 | 37,2 | 30,2 | 24,5 | 155-42 |
| 17 | M25x1.0 | 32,5 | 19,4 | 24,5 | 16,1 | 20,4 | 40,2 | 31,9 | 26,7 | 156-42 |
| 19 | M28x1.0 | 35,5 | 21,8 | 26,5 | 16,8 | 20,8 | 44,7 | 33,5 | 27,0 | 156-42 |
| 21 | M31x1.0 | 37,0 | 25,1 | 31,0 | 17,1 | 21,6 | 49,2 | 35,1 | 30,5 | 156-42 |
| 23 | M34x1.0 | 40,0 | 28,2 | 34,4 | 17,7 | 22,5 | 51,7 | 36,7 | 31,5 | 157-43 |
| 25 | M37x1.0 | 43,5 | 31,4 | 36,6 | 18,4 | 22,9 | 53,2 | 38,1 | 28,5 | 157-43 |

TABLE 2

| CODE | FINISH |
|---|---|
| C | ELECTROLESS NICKEL |
| B | CADMIUM OLIVE DRAB OVER ELECTROLESS NICKEL |
| ZB | ZINC COBALT OLIVE DRAB OVER ELECTROLESS NICKEL |
| ZN | ZINC NICKEL BLACK PASSIVATE OVER ELECTROLESS NICKEL |

LIST NOT EXHAUSTIVE, SEE PLATING TABLE FOR OTHER OPTIONS

97H1-17-1-C-ET

- SERIES
- CONNECTOR INTERFACE
- ANGLE
- SHELL SIZE (TABLE 1)
- MATERIAL
  - ALUMINIUM ALLOY
- FINISH (TABLE 2)
- EARTH TAG

Sealing and strain relief achieved with Heat Shrink Boot (see page 354)
Adhesive if required for assembly (see page 352)

DRAWING NOT TO SCALE, DIMENSIONS IN MM

See pages 18-26 for complete list of available materials, finishes and Connector interfaces
(dimensions, form and O Ring subject to change depending on Backshell material and Connector interface)

THIS DRAWING IS THE PROPERTY OF POLAMCO LTD AND MUST NOT BE USED FOR COMMERCIAL PURPOSES WITHOUT WRITTEN CONSENT OF THE COMPANY

# 76F - Low Profile Heat Shrink Boot Backshell

## Interface F - MIL-DTL-38999 SERIES I & II

Polamco

**Interconnect Solutions Worldwide**

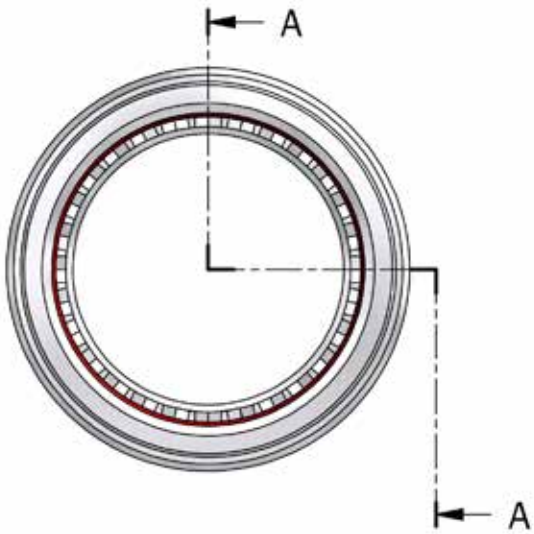


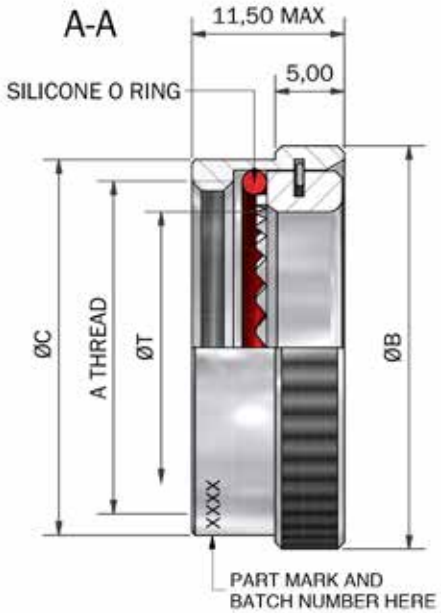


TABLE 1

| DASH NO. | SHELL SIZE SERIES I | SHELL SIZE SERIES II | A THREAD | ØB MAX | C MAX | ØT MIN |
|---|---|---|---|---|---|---|
| 08 | 09 | 08 | 7/16-28 UNEF | 17,0 | 14,5 | 6,6 |
| 10 | 11 | 10 | 9/16-24 UNEF | 20,0 | 18,0 | 10,1 |
| 12 | 13 | 12 | 11/16-24 UNEF | 23,0 | 21,0 | 12,9 |
| 14 | 15 | 14 | 13/16-20 UNEF | 26,2 | 24,0 | 16,1 |
| 16 | 17 | 16 | 15/16-20 UNEF | 29,0 | 27,0 | 19,3 |
| 18 | 19 | 18 | 1 1/16-18 UNEF | 32,0 | 30,5 | 21,7 |
| 20 | 21 | 20 | 1 3/16-18 UNEF | 35,0 | 33,5 | 24,9 |
| 22 | 23 | 22 | 1 5/16-18 UNEF | 38,0 | 36,5 | 28,1 |
| 24 | 25 | 24 | 1 7/16-18 UNEF | 42,0 | 40,0 | 31,3 |

TABLE 2

| CODE | MATERIAL / PLATING |
|---|---|
| 1-C | ALUMINIUM / ELECTROLESS NICKEL |
| 1-B | ALUMINIUM / CADMIUM OLIVE DRAB OVER ELECTROLESS NICKEL |
| 1-ZB | ALUMINIUM / ZINC COBALT OLIVE DRAB OVER ELECTROLESS NICKEL |
| 1-ZN | ALUMINIUM / ZINC NICKEL BLACK PASSIVATE OVER ELECTROLESS NICKEL |
| 1-G | ALUMINIUM / BLACK ANODISE, SULPHURIC |
| 4-J | STAINLESS STEEL / PASSIVATE |
| 2-Z | NICKEL ALUMINIUM BRONZE / SHOT BLAST |

LIST NOT EXHAUSTIVE, SEE MATERIAL AND PLATING TABLE FOR FULL LIST

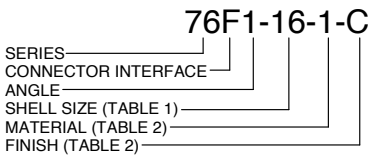


Sealing and strain relief achieved with Heat Shrink Boot (see page 354)
Adhesive if required for assembly (see page 352)

DRAWING NOT TO SCALE, DIMENSIONS IN MM

See pages 18-26 for complete list of available materials, finishes and Connector interfaces
(dimensions, form and O Ring subject to change depending on Backshell material and Connector interface)





THIS DRAWING IS THE PROPERTY OF POLAMCO LTD AND MUST NOT BE USED FOR COMMERCIAL PURPOSES WITHOUT WRITTEN CONSENT OF THE COMPANY

# 76H - Low Profile Heat Shrink Boot Backshell

## Interface H - MIL-DTL-38999 SERIES III & IV

Polamco

**Interconnect Solutions Worldwide**

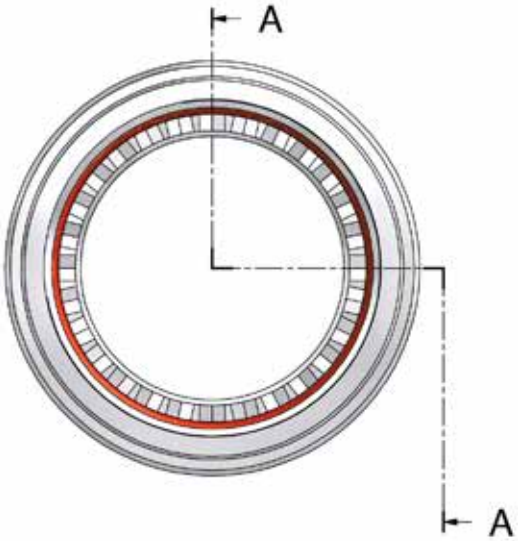


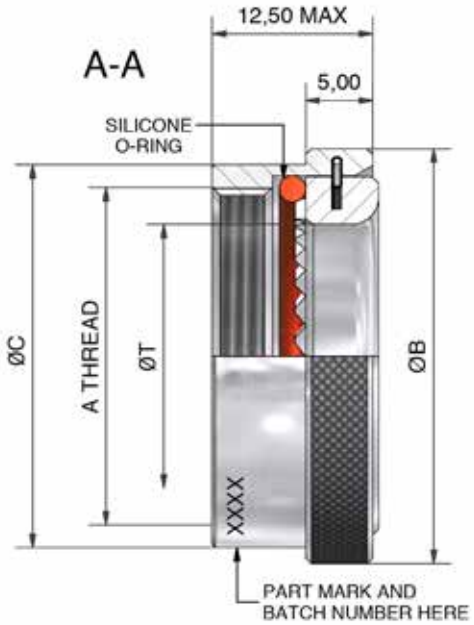


TABLE 1

| SHELL SIZE | A THREAD | ØB MAX | C MAX | T ±0,2 |
|---|---|---|---|---|
| 09 | M12 x 1.0 | 18,0 | 15,0 | 6,9 |
| 11 | M15 x 1.0 | 21,0 | 18,0 | 10,5 |
| 13 | M18 x 1.0 | 24,5 | 21,0 | 13,3 |
| 15 | M22 x 1.0 | 27,5 | 25,4 | 16,5 |
| 17 | M25 x 1.0 | 31,0 | 28,6 | 19,7 |
| 19 | M28 x 1.0 | 34,0 | 31,8 | 22,2 |
| 21 | M31 x 1.0 | 37,0 | 34,0 | 25,4 |
| 23 | M34 x 1.0 | 40,0 | 37,0 | 28,6 |
| 25 | M37 x 1.0 | 43,5 | 40,0 | 31,8 |

TABLE 2

| CODE | MATERIAL / PLATING |
|---|---|
| 1-C | ALUMINIUM / ELECTROLESS NICKEL |
| 1-B | ALUMINIUM / CADMIUM OLIVE DRAB OVER ELECTROLESS NICKEL |
| 1-ZB | ALUMINIUM / ZINC COBALT OLIVE DRAB OVER ELECTROLESS NICKEL |
| 1-ZN | ALUMINIUM / ZINC NICKEL BLACK PASSIVATE OVER ELECTROLESS NICKEL |
| 1-G | ALUMINIUM / BLACK ANODISE, SULPHURIC |
| 4-J | STAINLESS STEEL / PASSIVATE |
| 2-Z | NICKEL ALUMINIUM BRONZE / SHOT BLAST |

LIST NOT EXHAUSTIVE, SEE MATERIAL AND PLATING TABLE FOR FULL LIST

76H1-17-1-C

- SERIES
- CONNECTOR INTERFACE
- ANGLE
- SHELL SIZE (TABLE 1)
- MATERIAL(TABLE 2)
- FINISH (TABLE 2)

Sealing and strain relief achieved with Heat Shrink Boot (see page 354)
Adhesive if required for assembly (see page 352)

DRAWING NOT TO SCALE, DIMENSIONS IN MM

See pages 18-26 for complete list of available materials, finishes and Connector interfaces
(dimensions, form and O Ring subject to change depending on Backshell material and Connector interface)

THIS DRAWING IS THE PROPERTY OF POLAMCO LTD AND MUST NOT BE USED FOR COMMERCIAL PURPOSES WITHOUT WRITTEN CONSENT OF THE COMPANY

# PVG1EH1 - Heat Shrink Boot Backshell

## Interface H - MIL-DTL-38999 SERIES III & IV

Polamco

**Interconnect Solutions Worldwide**



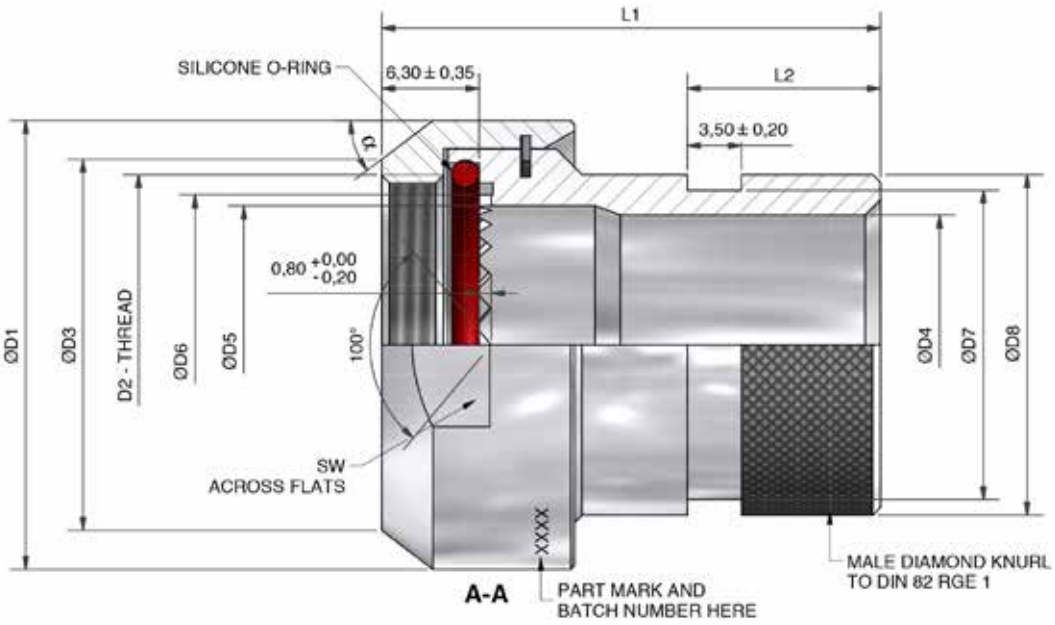


DRAWING NOT TO SCALE, DIMENSIONS IN MM

See pages 18-26 for complete list of available materials, finishes and Connector interfaces
(dimensions, form and O Ring subject to change depending on Backshell material and Connector interface)



THIS DRAWING IS THE PROPERTY OF POLAMCO LTD AND MUST NOT BE USED FOR COMMERCIAL PURPOSES WITHOUT WRITTEN CONSENT OF THE COMPANY

# PVG1EH1 - Heat Shrink Boot Backshell

## Interface H - MIL-DTL-38999 SERIES III & IV

Polamco

**Interconnect Solutions Worldwide**

### VG PART NUMBERING

VG95319-1011E001A

- VG SERIES
- DASH NUMBER
- MATERIAL AND FINISH OPTION
  - A = ALUMINIUM ALLOY - OLIVE DRAB OVER ELECTROLESS NICKEL
  - B = ALUMINIUM BRONZE - SHOT BLAST
  - S = STAINLESS STEEL - PASSIVATED

### POLAMCO PART NUMBERING

PVG1EH1-001-1-B

- POLAMCO SERIES
- INTERFACE
- ANGLE (1 = STRAIGHT)
- DASH NUMBER (TABLE 1)
- MATERIAL
- FINISH (TABLE 2)

ANY OPTIONS OUTSIDE THOSE POSSIBLE WITH VG PART NUMBER ARE AVAILABLE BUT WILL NOT BE VG APPROVED PARTS.
FOR FULL LIST OF MATERIAL AND PLATING OPTIONS PLEASE VISIT OUR WEBSITE

TABLE 1

| DASH NO. | SHELL SIZE | ØD1 ±0,2 | D2 | ØD3 +0,2/-0,1 | ØD4 +0,2/-0 | ØD5 +0,2/-0 | ØD6 +0,2/-0 | ØD7 +0/-0,2 | ØD8 +0,5/-0 | L1 MAX | L2 +0/-0,4 |
|---|---|---|---|---|---|---|---|---|---|---|---|
| 001 | 09 | 19 | M12 X 1 | 14,25 | 8,65 | 8,50 | 10,80 | 12,00 | 14,00 | 33,00 | 12,50 |
| 002 | 11 | 22 | M15 X 1 | 17,00 | 12,00 | 12,00 | 13,80 | 14,00 | 16,00 | 33,00 | 12,50 |
| 003 | 13 | 25 | M18 X 1 | 20,00 | 13,80 | 13,80 | 16,80 | 16,00 | 18,00 | 33,00 | 12,50 |
| 004 | 15 | 29 | M22 X 1 | 24,00 | 16,80 | 18,00 | 20,80 | 20,00 | 22,00 | 33,00 | 12,50 |
| 005 | 17 | 32 | M25 X 1 | 27,00 | 19,80 | 21,10 | 23,80 | 23,00 | 25,00 | 33,00 | 12,50 |
| 006 | 19 | 36 | M28 X 1 | 30,00 | 22,80 | 24,10 | 26,80 | 24,50 | 28,00 | 33,00 | 12,50 |
| 007 | 21 | 39 | M31 X 1 | 33,00 | 25,80 | 27,10 | 29,80 | 28,50 | 32,00 | 33,00 | 15,00 |
| 008 | 23 | 43 | M34 X 1 | 36,00 | 26,80 | 30,10 | 32,80 | 30,50 | 34,00 | 33,00 | 15,00 |
| 009 | 25 | 46 | M37 X 1 | 39,00 | 30,80 | 33,30 | 35,80 | 34,50 | 38,00 | 33,00 | 15,00 |

| DASH NO. | SHELL SIZE | α ±1° | SW +0/-0,2 | NO. OF TEETH | MASS (g) MAX |
|---|---|---|---|---|---|
| 001 | 09 | 35° | 17 | 12 | 10 |
| 002 | 11 | 37° | 20 | 16 | 12 |
| 003 | 13 | 37° | 23 | 20 | 14 |
| 004 | 15 | 37° | 27 | 24 | 17 |
| 005 | 17 | 37° | 30 | 28 | 20 |
| 006 | 19 | 40° | 34 | 32 | 30 |
| 007 | 21 | 40° | 37 | 36 | 40 |
| 008 | 23 | 40° | 41 | 40 | 45 |
| 009 | 25 | 40° | 44 | 44 | 50 |

TABLE 2

| CODE | FINISH |
|---|---|
| C | ELECTROLESS NICKEL |
| B | CADMIUM OLIVE DRAB OVER ELECTROLESS NICKEL |
| ZB | ZINC COBALT OLIVE DRAB OVER ELECTROLESS NICKEL |
| ZN | ZINC NICKEL BLACK PASSIVATE OVER ELECTROLESS NICKEL |

LIST NOT EXHAUSTIVE, SEE PLATING TABLE FOR OTHER OPTIONS

Sealing and strain relief achieved with Heat Shrink Boot (see page 354)
Adhesive if required for assembly (see page 352)

DRAWING NOT TO SCALE, DIMENSIONS IN MM

See pages 18-26 for complete list of available materials, finishes and Connector interfaces
(dimensions, form and O Ring subject to change depending on Backshell material and Connector interface)

THIS DRAWING IS THE PROPERTY OF POLAMCO LTD AND MUST NOT BE USED FOR COMMERCIAL PURPOSES WITHOUT WRITTEN CONSENT OF THE COMPANY

# 98F - E Nut Backshell

## Interface F - MIL-DTL-38999 SERIES I & II

Polamco

**Interconnect Solutions Worldwide**

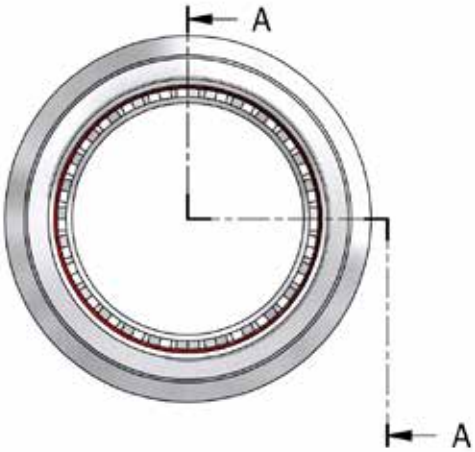


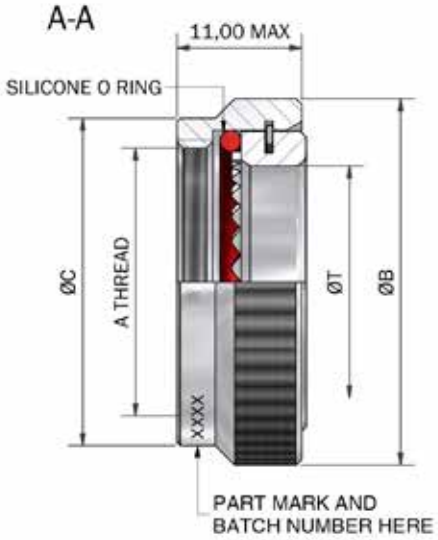


TABLE 1

| DASH NO. | SHELL SIZE SERIES I | SHELL SIZE SERIES II | A THREAD | ØB MAX | C MAX | ØT MIN |
|---|---|---|---|---|---|---|
| 08 | 09 | 08 | 7/16-28 UNEF | 18,3 | 14,5 | 6,6 |
| 10 | 11 | 10 | 9/16-24 UNEF | 21,5 | 18,0 | 10,1 |
| 12 | 13 | 12 | 11/16-24 UNEF | 24,5 | 21,0 | 12,9 |
| 14 | 15 | 14 | 13/16-20 UNEF | 27,8 | 24,2 | 16,1 |
| 16 | 17 | 16 | 15/16-20 UNEF | 30,8 | 27,5 | 19,3 |
| 18 | 19 | 18 | 1 1/16-18 UNEF | 34,1 | 30,7 | 21,7 |
| 20 | 21 | 20 | 1 3/16-18 UNEF | 37,3 | 33,8 | 24,9 |
| 22 | 23 | 22 | 1 5/16-18 UNEF | 40,5 | 36,9 | 28,1 |
| 24 | 25 | 24 | 1 7/16-18 UNEF | 43,7 | 40,1 | 31,3 |

TABLE 2

| CODE | MATERIAL / PLATING |
|---|---|
| 1-C | ALUMINIUM / ELECTROLESS NICKEL |
| 1-B | ALUMINIUM / CADMIUM OLIVE DRAB OVER ELECTROLESS NICKEL |
| 1-ZB | ALUMINIUM / ZINC COBALT OLIVE DRAB OVER ELECTROLESS NICKEL |
| 1-ZN | ALUMINIUM / ZINC NICKEL BLACK PASSIVATE OVER ELECTROLESS NICKEL |
| 1-G | ALUMINIUM / BLACK ANODISE, SULPHURIC |
| 4-J | STAINLESS STEEL / PASSIVATE |
| 2-Z | NICKEL ALUMINIUM BRONZE / SHOT BLAST |

LIST NOT EXHAUSTIVE, SEE MATERIAL AND PLATING TABLE FOR FULL LIST

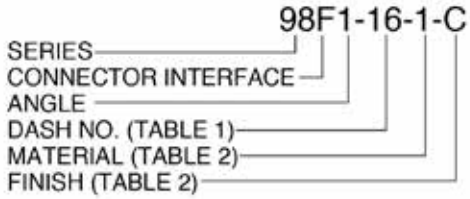


DRAWING NOT TO SCALE, DIMENSIONS IN MM

See pages 18-26 for complete list of available materials, finishes and Connector interfaces
(dimensions, form and O Ring subject to change depending on Backshell material and Connector interface)





THIS DRAWING IS THE PROPERTY OF POLAMCO LTD AND MUST NOT BE USED FOR COMMERCIAL PURPOSES WITHOUT WRITTEN CONSENT OF THE COMPANY

# 98H - E Nut Backshell

## Interface H - MIL-DTL-38999 SERIES III & IV

Polamco

**Interconnect Solutions Worldwide**

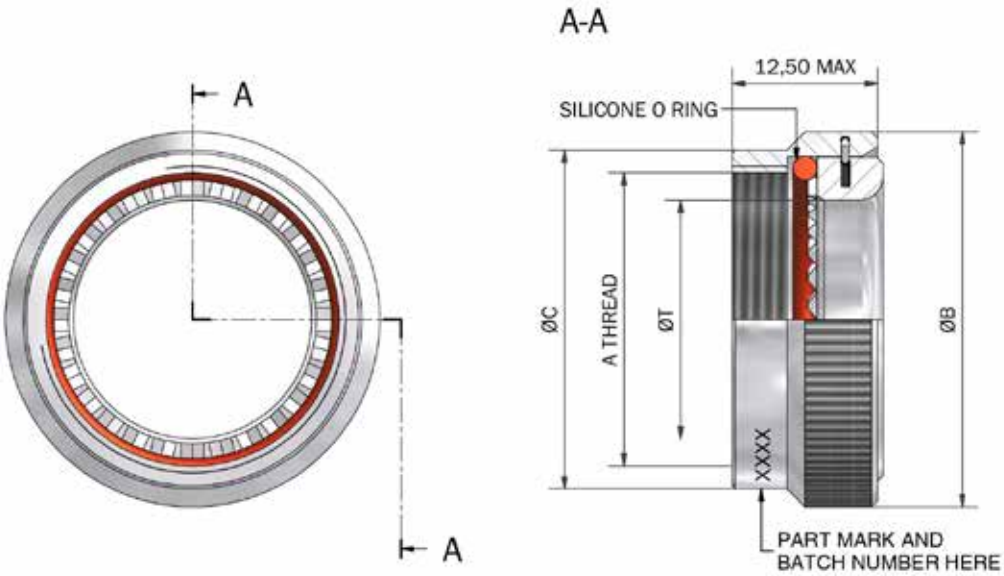


TABLE 1

| SHELL SIZE | A THREAD | ØB MAX | C MAX | ØT ±0,2 |
|---|---|---|---|---|
| 09 | M12 x 1.0 | 18,0 | 15,0 | 6,9 |
| 11 | M15 x 1.0 | 21,0 | 18,0 | 10,5 |
| 13 | M18 x 1.0 | 24,5 | 21,0 | 13,3 |
| 15 | M22 x 1.0 | 27,5 | 25,0 | 16,5 |
| 17 | M25 x 1.0 | 31,0 | 28,0 | 19,7 |
| 19 | M28 x 1.0 | 34,0 | 31,0 | 22,2 |
| 21 | M31 x 1.0 | 37,0 | 34,0 | 25,4 |
| 23 | M34 x 1.0 | 40,0 | 37,0 | 28,6 |
| 25 | M37 x 1.0 | 43,5 | 40,0 | 31,8 |

TABLE 2

| CODE | MATERIAL / PLATING |
|---|---|
| 1-C | ALUMINIUM / ELECTROLESS NICKEL |
| 1-B | ALUMINIUM / CADMIUM OLIVE DRAB OVER ELECTROLESS NICKEL |
| 1-ZB | ALUMINIUM / ZINC COBALT OLIVE DRAB OVER ELECTROLESS NICKEL |
| 1-ZN | ALUMINIUM / ZINC NICKEL BLACK PASSIVATE OVER ELECTROLESS NICKEL |
| 1-G | ALUMINIUM / BLACK ANODISE, SULPHURIC |
| 4-J | STAINLESS STEEL / PASSIVATE |
| 2-Z | NICKEL ALUMINIUM BRONZE / SHOT BLAST |

LIST NOT EXHAUSTIVE, SEE MATERIAL AND PLATING TABLE FOR FULL LIST

98H1-17-1-C

- SERIES
- CONNECTOR INTERFACE
- ANGLE
- SHELL SIZE (TABLE 1)
- MATERIAL (TABLE 2)
- FINISH (TABLE 2)

DRAWING NOT TO SCALE, DIMENSIONS IN MM



See pages 18-26 for complete list of available materials, finishes and Connector interfaces
(dimensions, form and O Ring subject to change depending on Backshell material and Connector interface)

THIS DRAWING IS THE PROPERTY OF POLAMCO LTD AND MUST NOT BE USED FOR COMMERCIAL PURPOSES WITHOUT WRITTEN CONSENT OF THE COMPANY

# Section Index


8 Backshell Product Finder

16 Product Information

29 Screened Backshells

275 Non-Screened Backshells

323 Conduit Backshells & Conduit

333 Thread Adaptors & Extenders

1 Associated Products

356 Glossary & Terms

# Conduit Backshells & Conduit

## Polamco has more than 30 years experience in the manufacture of Backshells for the cable harness industry.

63 Series

Conduit Backshells

100P2589 Series

Non-Metallic Conduit

### Conduit Solutions

Spin-coupling EMC and environmental conduit backshell system.

- Reliable conduit termination with integral environmental seal
- 360 degree screen termination feature for internal screen
- Separate earth tag may be specified for termination of individual screens
- No application tooling required for termination or re-work
- All components may be re-used
- May be supplied as individual adaptors or as complete system
- Comprehensive choice of standard conduit materials
- Backshells for circular and rectangular connectors
- Solid machined adaptor construction for reliable strength and performance
- Straight, 45 and 90° standard
- Alternative angles on request
- Aluminium, bronze and stainless steel

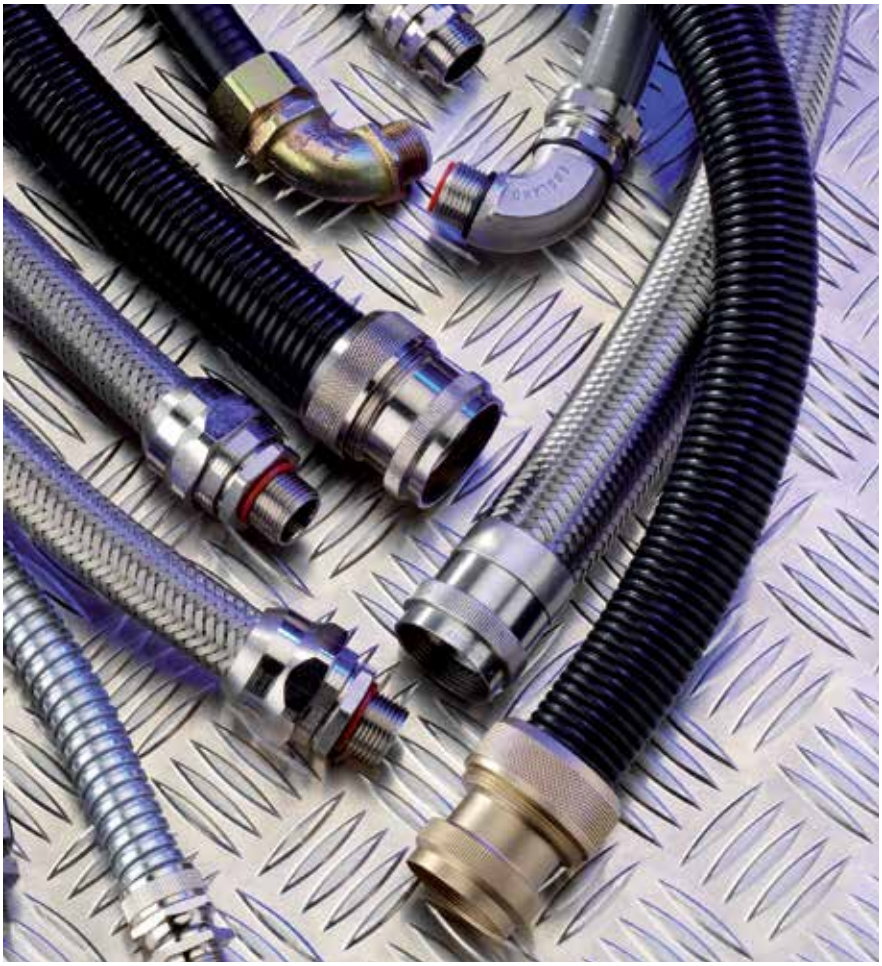

The Polamco conduit system has been designed to provide a series of fully screened, environmentally sealed cable assembly systems for commercial, mass transportation, test equipment and aerospace/defence applications.

The Polamco conduit system can be supplied as component parts or as an assembled conduit to predetermined length and form. We offer a flexible service to enable a conduit system to be designed and built to the requirements of our customers.

# 63F - Conduit Backshell

## Interface F - MIL-DTL-38999 SERIES I

Polamco

**Interconnect Solutions Worldwide**

**SUITABLE FOR USE WITH 100P2589 SERIES CONDUIT**

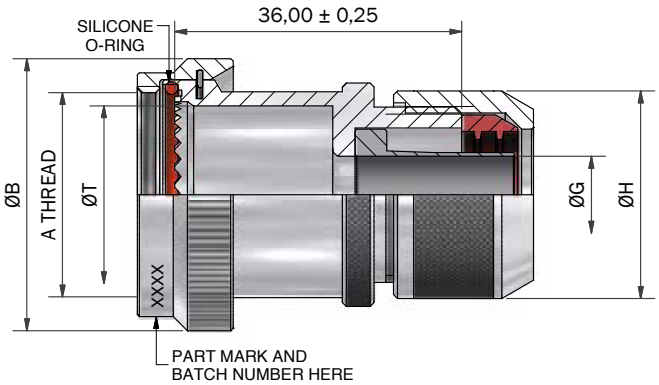


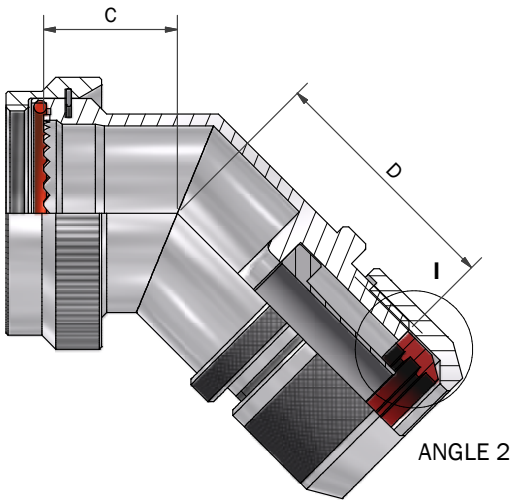


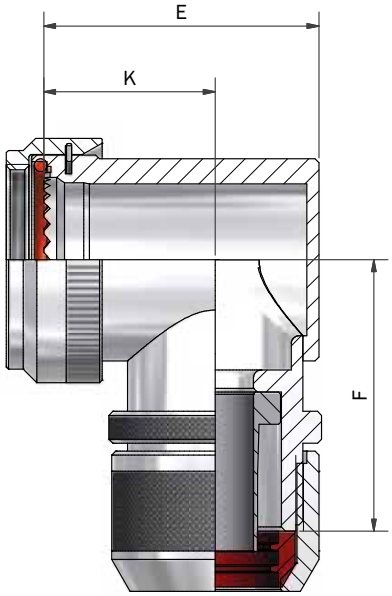


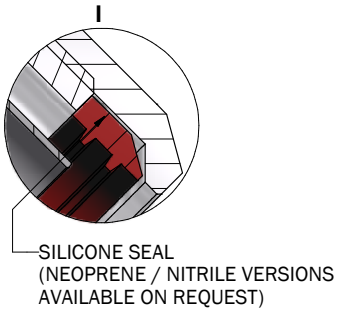


DRAWING NOT TO SCALE, DIMENSIONS IN MM

See pages 18-26 for complete list of available materials, finishes and Connector interfaces
(dimensions, form and O Ring subject to change depending on Backshell material and Connector interface)



THIS DRAWING IS THE PROPERTY OF POLAMCO LTD AND MUST NOT BE USED FOR COMMERCIAL PURPOSES WITHOUT WRITTEN CONSENT OF THE COMPANY

# 63F - Conduit Backshell

## Interface F - MIL-DTL-38999 SERIES I

Polamco

**Interconnect Solutions Worldwide**

TABLE 1

| SHELL SIZE | A THREAD | ØB MAX | ØT MIN | C ±0,5 | D MAX | E MAX | F MAX | K ±0,5 |
|---|---|---|---|---|---|---|---|---|
| 09 | 7/16-28 UNEF | 18,0 | 6,8 | 16,4 | 27,2 | 22,7 | 35,3 | 15,0 |
| 11 | 9/16-24 UNEF | 21,0 | 10,2 | 17,2 | 28,0 | 26,2 | 36,8 | 17,0 |
| 13 | 11/16-24 UNEF | 24,5 | 13,1 | 17,6 | 28,6 | 29,2 | 38,3 | 18,0 |
| 15 | 13/16-20 UNEF | 27,8 | 16,2 | 18,5 | 29,6 | 32,2 | 39,8 | 20,0 |
| 17 | 15/16-20 UNEF | 30,8 | 19,3 | 19,2 | 30,2 | 35,7 | 41,5 | 21,5 |
| 19 | 1 1/16-18 UNEF | 34,1 | 22,3 | 19,6 | 30,9 | 39,7 | 43,0 | 23,0 |
| 21 | 1 3/16-18 UNEF | 37,3 | 25,8 | 20,4 | 31,2 | 42,2 | 44,7 | 25,0 |
| 23 | 1 5/16-18 UNEF | 41,0 | 28,3 | 20,8 | 31,8 | 45,2 | 46,2 | 26,0 |
| 25 | 1 7/16-18 UNEF | 43,7 | 31,5 | 21,7 | 32,5 | 48,2 | 47,7 | 28,0 |

TABLE 2

| CONDUIT SIZE | ØG CABLE MAX | ØH MAX |
|---|---|---|
| 13 | 7,7 | 23,0 |
| 16 | 9,5 | 26,0 |
| 21 | 13,4 | 31,0 |
| 28 | 17,6 | 38,0 |
| 34 | 22,4 | 46,0 |
| 42 | 28,6 | 56,0 |

FOR PRODUCT CHARACTERISTICS SEE 100P2589 DATASHEET

TABLE 3

| CODE | FINISH |
|---|---|
| C | ELECTROLESS NICKEL |
| B | CADMIUM OLIVE DRAB OVER ELECTROLESS NICKEL |
| ZB | ZINC COBALT OLIVE DRAB OVER ELECTROLESS NICKEL |
| ZN | ZINC NICKEL BLACK PASSIVATE OVER ELECTROLESS NICKEL |

LIST NOT EXHAUSTIVE, SEE PLATING TABLE FOR OTHER OPTIONS

TABLE 4

| PART NUMBER (** - SIZE) | DESCRIPTION |
|---|---|
| 100P2589-N6S-** | STANDARD WEIGHT POLYAMIDE (NYLON) 6 |
| 100P2589-N11S-** | STANDARD WEIGHT MODIFIED POLYAMIDE 11 |
| 100P2589-N11H-** | HEAVYWEIGHT MODIFIED POLYAMIDE 11 |
| 100P2589-PS-** | POLYESTER |
| 100P2589-PKS-** | POLYKETONE (PEEK) |

63F1-19-16-1-C

- SERIES
- CONNECTOR INTERFACE
- ANGLE
- SHELL SIZE (TABLE 1)
- CONDUIT SIZE (TABLE 2)
- MATERIAL
  - ALUMINIUM ALLOY
- FINISH (TABLE 3)

DRAWING NOT TO SCALE, DIMENSIONS IN MM

See pages 18-26 for complete list of available materials, finishes and Connector interfaces
(dimensions, form and O Ring subject to change depending on Backshell material and Connector interface)

THIS DRAWING IS THE PROPERTY OF POLAMCO LTD AND MUST NOT BE USED FOR COMMERCIAL PURPOSES WITHOUT WRITTEN CONSENT OF THE COMPANY

# 63F - Conduit Backshell

## Interface F - MIL-DTL-38999 SERIES II

Polamco

**Interconnect Solutions Worldwide**

ANGLE 1

**SUITABLE FOR USE WITH 100P2589 SERIES CONDUIT**

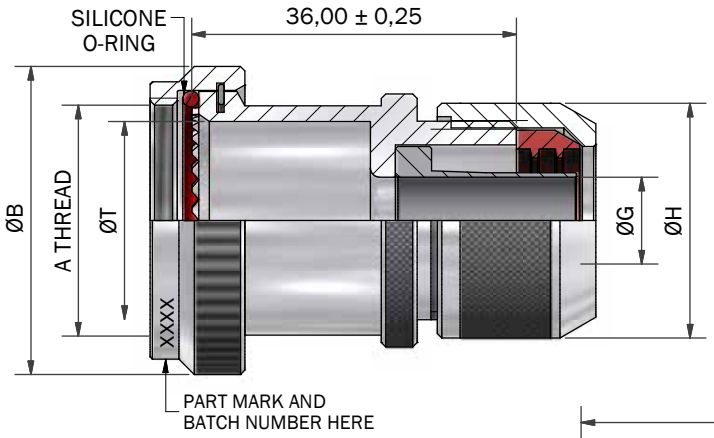


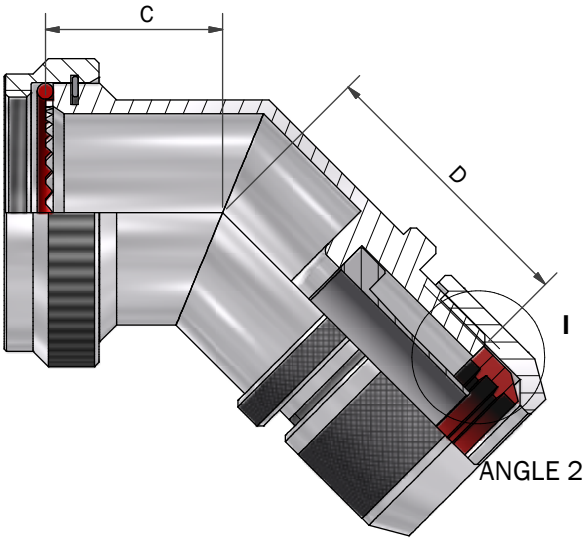


ANGLE 2

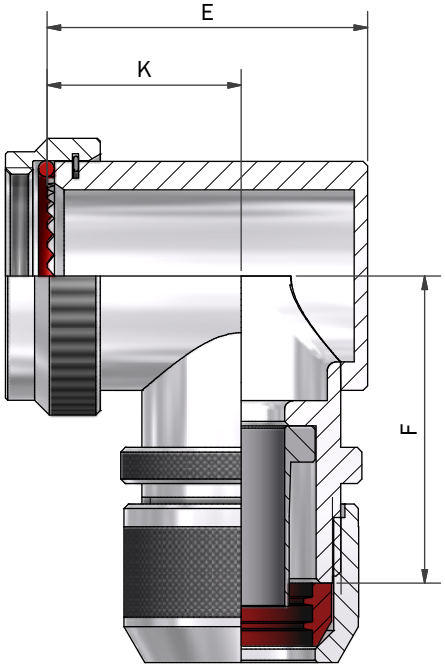


ANGLE 3

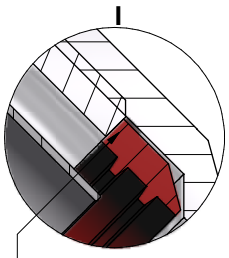


SILICONE SEAL
(NEOPRENE / NITRILE VERSIONS
AVAILABLE ON REQUEST)

DRAWING NOT TO SCALE, DIMENSIONS IN MM

See pages 18-26 for complete list of available materials, finishes and Connector interfaces
(dimensions, form and O Ring subject to change depending on Backshell material and Connector interface)



THIS DRAWING IS THE PROPERTY OF POLAMCO LTD AND MUST NOT BE USED FOR COMMERCIAL PURPOSES WITHOUT WRITTEN CONSENT OF THE COMPANY

# 63F - Conduit Backshell

## Interface F - MIL-DTL-38999 SERIES II

Polamco

**Interconnect Solutions Worldwide**

TABLE 1

| SHELL SIZE | A THREAD | ØB MAX | ØT MIN | C ±0,5 | D MAX | E MAX | F MAX | K ±0,5 |
|---|---|---|---|---|---|---|---|---|
| 08 | 7/16-28 UNEF | 18,3 | 6,6 | 16,4 | 27,2 | 22,7 | 35,3 | 15,0 |
| 10 | 9/16-24 UNEF | 21,5 | 10,1 | 17,2 | 28,0 | 26,2 | 36,8 | 17,0 |
| 12 | 11/16-24 UNEF | 24,5 | 12,9 | 17,6 | 28,6 | 29,2 | 38,3 | 18,0 |
| 14 | 13/16-20 UNEF | 27,8 | 16,1 | 18,5 | 29,6 | 32,2 | 39,8 | 20,0 |
| 16 | 15/16-20 UNEF | 30,8 | 19,3 | 19,2 | 30,2 | 35,7 | 41,5 | 21,5 |
| 18 | 1 1/16-18 UNEF | 34,1 | 21,7 | 19,6 | 30,9 | 39,7 | 43,0 | 23,0 |
| 20 | 1 3/16-18 UNEF | 37,3 | 24,9 | 20,4 | 31,2 | 42,2 | 44,7 | 25,0 |
| 22 | 1 5/16-18 UNEF | 40,5 | 28,1 | 20,8 | 31,8 | 45,2 | 46,2 | 26,0 |
| 24 | 1 7/16-18 UNEF | 43,7 | 31,3 | 21,7 | 32,5 | 48,2 | 47,7 | 28,0 |

TABLE 2

| CONDUIT SIZE | ØG CABLE MAX | ØH MAX |
|---|---|---|
| 13 | 7,7 | 23,0 |
| 16 | 9,5 | 26,0 |
| 21 | 13,4 | 31,0 |
| 28 | 17,6 | 38,0 |
| 34 | 22,4 | 46,0 |
| 42 | 28,6 | 56,0 |

TABLE 3

| CODE | FINISH |
|---|---|
| C | ELECTROLESS NICKEL |
| B | CADMIUM OLIVE DRAB OVER ELECTROLESS NICKEL |
| ZB | ZINC COBALT OLIVE DRAB OVER ELECTROLESS NICKEL |
| ZN | ZINC NICKEL BLACK PASSIVATE OVER ELECTROLESS NICKEL |

LIST NOT EXHAUSTIVE, SEE PLATING TABLE FOR OTHER OPTIONS

TABLE 4

| PART NUMBER (** - SIZE) | DESCRIPTION |
|---|---|
| 100P2589-N6S-** | STANDARD WEIGHT POLYAMIDE (NYLON) 6 |
| 100P2589-N11S-** | STANDARD WEIGHT MODIFIED POLYAMIDE 11 |
| 100P2589-N11H-** | HEAVYWEIGHT MODIFIED POLYAMIDE 11 |
| 100P2589-PS-** | POLYESTER |
| 100P2589-PKS-** | POLYKETONE (PEEK) |

FOR PRODUCT CHARACTERISTICS SEE 100P2589 DATASHEET

63F1-18-16-1-C

- SERIES
- CONNECTOR INTERFACE
- ANGLE
- SHELL SIZE (TABLE 1)
- CONDUIT SIZE (TABLE 2)
- MATERIAL
  - ALUMINIUM ALLOY
- FINISH (TABLE 3)

DRAWING NOT TO SCALE, DIMENSIONS IN MM

See pages 18-26 for complete list of available materials, finishes and Connector interfaces
(dimensions, form and O Ring subject to change depending on Backshell material and Connector interface)

THIS DRAWING IS THE PROPERTY OF POLAMCO LTD AND MUST NOT BE USED FOR COMMERCIAL PURPOSES WITHOUT WRITTEN CONSENT OF THE COMPANY

# 63H - Conduit Backshell

## Interface H - MIL-DTL-38999 SERIES III & IV

Polamco

**Interconnect Solutions Worldwide**

SUITABLE FOR USE WITH 100P2589 SERIES CONDUIT

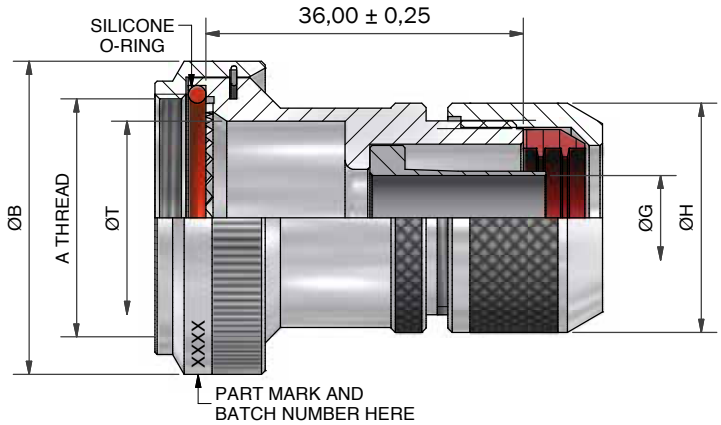


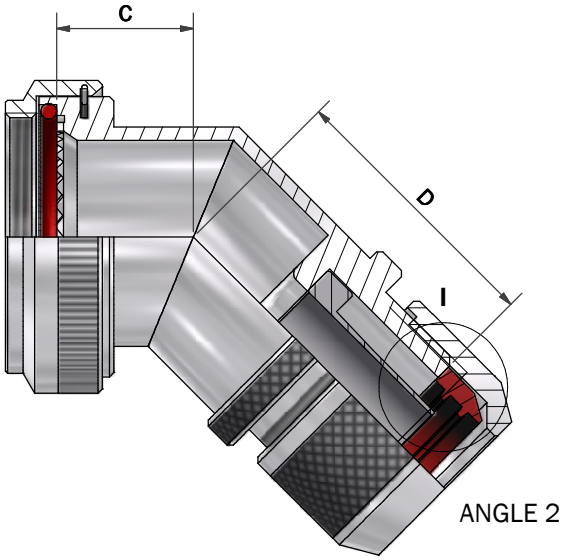


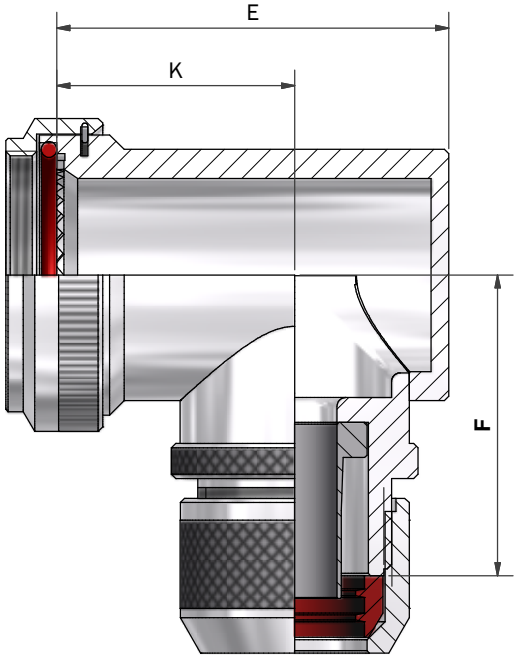


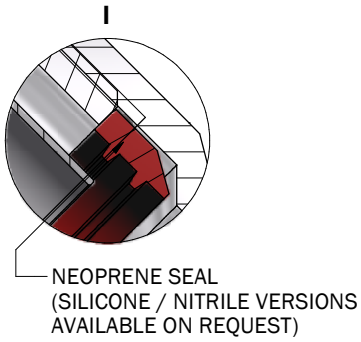


DRAWING NOT TO SCALE, DIMENSIONS IN MM

See pages 18-26 for complete list of available materials, finishes and Connector interfaces
(dimensions, form and O Ring subject to change depending on Backshell material and Connector interface)



THIS DRAWING IS THE PROPERTY OF POLAMCO LTD AND MUST NOT BE USED FOR COMMERCIAL PURPOSES WITHOUT WRITTEN CONSENT OF THE COMPANY

# 63H - Conduit Backshell

## Interface H - MIL-DTL-38999 SERIES III & IV

Polamco

**Interconnect Solutions Worldwide**

TABLE 1

| SHELL SIZE | A THREAD | ØB MAX | ØT MIN | C MAX | D MAX | E MAX | F MAX | K ±0,5 |
|---|---|---|---|---|---|---|---|---|
| 09 | M12 x 1.0 | 18,0 | 6,7 | 13,1 | 27,2 | 25,7 | 35,3 | 17,5 |
| 11 | M15 x 1.0 | 21,0 | 10,2 | 13,9 | 28,0 | 26,7 | 36,8 | 17,5 |
| 13 | M18 x 1.0 | 24,5 | 13,5 | 14,5 | 28,6 | 31,2 | 38,3 | 20,0 |
| 15 | M22 x 1.0 | 29,0 | 16,2 | 15,5 | 29,6 | 37,2 | 39,8 | 24,5 |
| 17 | M25 x 1.0 | 32,5 | 19,4 | 16,1 | 30,2 | 40,2 | 41,5 | 26,7 |
| 19 | M28 x 1.0 | 35,5 | 21,8 | 16,8 | 30,9 | 44,7 | 43,0 | 27,0 |
| 21 | M31 x 1.0 | 37,0 | 25,1 | 17,1 | 31,2 | 49,2 | 44,7 | 30,5 |
| 23 | M34 x 1.0 | 40,0 | 28,2 | 17,7 | 31,8 | 41,7 | 46,2 | 31,5 |
| 25 | M37 x 1.0 | 43,5 | 31,4 | 18,4 | 32,5 | 53,2 | 47,7 | 28,5 |

TABLE 2

| CONDUIT SIZE | ØG CABLE MAX | ØH MAX |
|---|---|---|
| 13 | 7,7 | 23,0 |
| 16 | 9,5 | 26,0 |
| 21 | 13,4 | 31,0 |
| 28 | 17,6 | 38,0 |
| 34 | 22,4 | 46,0 |
| 42 | 28,6 | 56,0 |

TABLE 3

| CODE | FINISH |
|---|---|
| C | ELECTROLESS NICKEL |
| B | CADMIUM OLIVE DRAB OVER ELECTROLESS NICKEL |
| ZB | ZINC COBALT OLIVE DRAB OVER ELECTROLESS NICKEL |
| ZN | ZINC NICKEL BLACK PASSIVATE OVER ELECTROLESS NICKEL |

LIST NOT EXHAUSTIVE, SEE PLATING TABLE FOR OTHER OPTIONS

TABLE 4

| PART NUMBER (** - SIZE) | DESCRIPTION |
|---|---|
| 100P2589-N6S-** | STANDARD WEIGHT POLYAMIDE (NYLON) 6 |
| 100P2589-N11S-** | STANDARD WEIGHT MODIFIED POLYAMIDE 11 |
| 100P2589-N11H-** | HEAVYWEIGHT MODIFIED POLYAMIDE 11 |
| 100P2589-PS-** | POLYESTER |
| 100P2589-PKS-** | POLYKETONE (PEEK) |

FOR PRODUCT CHARACTERISTICS SEE 100P2589 DATASHEET

63H1-19-13-1-C

SERIES
CONNECTOR INTERFACE
ANGLE
SHELL SIZE (TABLE 1)
CONDUIT SIZE (TABLE 2)
MATERIAL
ALUMINIUM ALLOY
FINISH (TABLE 3)

DRAWING NOT TO SCALE, DIMENSIONS IN MM

See pages 18-26 for complete list of available materials, finishes and Connector interfaces
(dimensions, form and O Ring subject to change depending on Backshell material and Connector interface)

THIS DRAWING IS THE PROPERTY OF POLAMCO LTD AND MUST NOT BE USED FOR COMMERCIAL PURPOSES WITHOUT WRITTEN CONSENT OF THE COMPANY

# 100P2589 - Non-Metallic Conduit

## Suitable for use with Polamco 63 Series

Polamco

**Interconnect Solutions Worldwide**

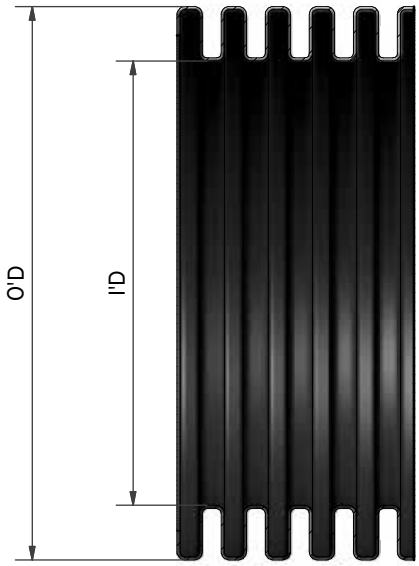


100P2589-N11S-34-25

POLAMCO SERIES
MATERIAL (TABLE 1)
WEIGHT
S - STANDARD
H - HEAVY
NOMINAL SIZE (TABLE 2)
REEL LENGTH (M) (TABLE 2)

TABLE 1

| CODE | WEIGHT | MATERIAL | TEMPERATURE RANGE - STATIC | TEMPERATURE RANGE - DYNAMIC | UV RESISTANCE | FLEXIBILITY | FATIGUE LIFE | FIRE PERFORMANCE |
|---|---|---|---|---|---|---|---|---|
| N6S | STANDARD | POLYAMIDE (NYLON) 6 | -40°C / +120°C | -5°C / +120°C | VERY HIGH | HIGH | HIGH | LOW FIRE HAZARD |
| N6SM | STANDARD | MODIFIED POLYAMIDE (NYLON) 6 | -40°C / +120°C | -5°C / +120°C | VERY HIGH | HIGH | MEDIUM | ENHANCED LOW FIRE HAZARD |
| N11S | STANDARD | MODIFIED POLYAMIDE 11 | -50°C / +110°C | -45°C / +120°C | VERY HIGH | VERY HIGH | VERY HIGH | SELF EXTINGUISHING HALOGEN FREE |
| N11H | HEAVY | MODIFIED POLYAMIDE 11 | -50°C / +110°C | -45°C / +120°C | VERY HIGH | VERY HIGH | VERY HIGH | SELF EXTINGUISHING HALOGEN FREE |
| PS | STANDARD | POLYESTER | -50°C / +135°C | -25°C / +150°C | VERY HIGH | HIGH | HIGH | SELF EXT. HF, LOW SMOKE, VERY LOW TOXICITY |
| PKS | STANDARD | POLYKETONE (PEEK) | -60°C / +260°C | -45°C / +260°C | VERY HIGH | HIGH | HIGH | SUPER LOW FIRE HAZARD |

CONTACT SALES OFFICE FOR PRODUCT APPROVALS & OTHER MATERIALS, SIZES & LENGTHS AVAILABLE

DRAWING NOT TO SCALE, DIMENSIONS IN MM

See pages 18-26 for complete list of available materials, finishes and Connector interfaces
(dimensions, form and O Ring subject to change depending on Backshell material and Connector interface)



THIS DRAWING IS THE PROPERTY OF POLAMCO LTD AND MUST NOT BE USED FOR COMMERCIAL PURPOSES WITHOUT WRITTEN CONSENT OF THE COMPANY

# 100P2589 - Non-Metallic Conduit

## Suitable for use with Polamco 63 Series

Polamco

**Interconnect Solutions Worldwide**

TABLE 2

| PART NUMBER | OUTSIDE DIA (MM) | INSIDE DIA (MM) | MIN BEND RADIUS (MM) | REEL LENGTH (M) | RECOMMENDED SCREENBRAID * |
|---|---|---|---|---|---|
| 100P2589-N6S-13 | 13,0 | 9.6 | 25 | 50 | PE93-10.0-T |
| 100P2589-N6S-16 | 15.8 | 11.8 | 35 | 10 / 25 / 50 | PE93-12.5-T |
| 100P2589-N6S-21 | 21.2 | 16.5 | 45 | 10 / 25 / 50 | PE93-15.0-T |
| 100P2589-N6S-28 | 28.5 | 21.7 | 50 | 10 / 25 / 50 | PE93-20.0-T |
| 100P2589-N6S-34 | 34.5 | 27.7 | 60 | 10 / 25 / 50 | PE93-25.0-T |
| 100P2589-N6S-42 | 42.5 | 35.2 | 65 | 10 / 25 | PE93-30.0-T |
| 100P2589-N6SM-13 | 13,0 | 9.4 | 35 | 50 | PE93-10.0-T |
| 100P2589-N6SM-16 | 15.8 | 11.7 | 45 | 50 | PE93-12.5-T |
| 100P2589-N6SM-21F | 21.2 | 16.6 | 60 | 50 | PE93-15.0-T |
| 100P2589-N6SM-21C | 21.2 | 14.7 | 60 | 50 | PE93-15.0-T |
| 100P2589-N6SM-28 | 28.5 | 21.7 | 70 | 50 | PE93-20.0-T |
| 100P2589-N6SM-34 | 34.5 | 27.7 | 75 | 50 | PE93-25.0-T |
| 100P2589-N6SM-42 | 42.5 | 35.1 | 90 | 25 | PE93-30.0-T |
| 100P2589-N11S-13 | 13,0 | 9.9 | 25 | 50 | PE93-10.0-T |
| 100P2589-N11S-16 | 15.8 | 11.7 | 30 | 50 | PE93-12.5-T |
| 100P2589-N11S-21 | 21.2 | 16.6 | 35 | 50 | PE93-15.0-T |
| 100P2589-N11S-28 | 28.5 | 21.7 | 45 | 50 | PE93-20.0-T |
| 100P2589-N11S-34 | 34.5 | 27.7 | 55 | 25 | PE93-25.0-T |
| 100P2589-N11S-42 | 42.5 | 35.5 | 60 | 25 | PE93-30.0-T |
| 100P2589-N11H-13 | 13,0 | 9.7 | 30 | 50 | PE93-10.0-T |
| 100P2589-N11H-16 | 15.8 | 11.5 | 35 | 50 | PE93-12.5-T |
| 100P2589-N11H-21 | 21.2 | 16.4 | 40 | 50 | PE93-15.0-T |
| 100P2589-N11H-28 | 28.5 | 21.5 | 50 | 50 | PE93-20.0-T |
| 100P2589-N11H-34 | 34.5 | 27.5 | 60 | 25 | PE93-25.0-T |
| 100P2589-N11H-42 | 42.5 | 35.3 | 65 | 25 | PE93-30.0-T |
| 100P2589-PS-13 | 13,0 | 9.5 | 35 | 50 | PE93-10.0-T |
| 100P2589-PS-16 | 15.8 | 11.3 | 45 | 50 | PE93-12.5-T |
| 100P2589-PS-21 | 21.2 | 16,0 | 60 | 50 | PE93-15.0-T |
| 100P2589-PS-28 | 28.5 | 21.3 | 70 | 50 | PE93-20.0-T |
| 100P2589-PS-34 | 34.5 | 27.2 | 75 | 50 | PE93-25.0-T |
| 100P2589-PS-42 | 42.5 | 34.2 | 90 | 25 | PE93-30.0-T |
| 100P2589-PKS-13 | 13,2 | 10,0 | 35 | 25 / 50 | PE93-10.0-T |
| 100P2589-PKS-16 | 16,3 | 11.7 | 45 | 25 / 50 | PE93-12.5-T |
| 100P2589-PKS-21 | 21,2 | 16.6 | 60 | 25 / 50 | PE93-15.0-T |
| 100P2589-PKS-28 | 28,4 | 21.7 | 65 | 25 / 50 | PE93-20.0-T |
| 100P2589-PKS-34 | 34,3 | 27.7 | 80 | 25 / 50 | PE93-25.0-T |

* TINNED COPPER SCREENBRAID 93 - OTHER TYPES AVAILABLE

DRAWING NOT TO SCALE, DIMENSIONS IN MM

See pages 18-26 for complete list of available materials, finishes and Connector interfaces
(dimensions, form and O Ring subject to change depending on Backshell material and Connector interface)

THIS DRAWING IS THE PROPERTY OF POLAMCO LTD AND MUST NOT BE USED FOR COMMERCIAL PURPOSES WITHOUT WRITTEN CONSENT OF THE COMPANY

# Section Index


8 Backshell Product Finder

16 Product Information

29 Screened Backshells

275 Non-Screened Backshells

323 Conduit Backshells & Conduit

333 Thread Adaptors & Extenders

1 Associated Products

356 Glossary & Terms

# Thread Adaptors & Extenders

## Thread Adaptors

Thread Adaptors in male/female thread available in:

- Metric
- Unified
- PG
- NPT

Backshell assembly that provides universal Metric, Unified, PG or NPT thread interface. A variety of thread sizes can be specified for each connector shell size, together with a wide choice of backshell length options

### Characteristics

- Threads independent of connector shell size
- PG, unified, NPT and metric threads available, male and female for each
- Aluminium, Bronze, Stainless Steel and Composite options and a large range of materials and finishes
- Straight, 45° and 90° standard
- Alternative angles on request
- Wide choice of lengths for extenders
- Direct and spin coupling options available
- Fully shrouded and sealed series I & III interface
- Maintains the low resistance requirements for EMC gland termination, subject to appropriate plating

## Extenders

Extender backshells are an intermediate adaptor between the connector and normal backshell, used where extra length is required between connector and backshell.

The rear of the extender backshell mimics the accessory thread of the connector, so the same “rear” backshell can be used, regardless of whether the extender backshell is present or not.

This means that EMC, sealing (in the case of series I & III) and tooth “clocking” are maintained, and that extender backshells can be chained, e.g.two 45° extender backshells would make a 90° assembly with a large bend radius.

Double Ended Backshells also available for joining connectors back-to-back.

# Metric / Unified / PG / NPT Thread Adaptor

## Interface F - MIL-DTL-38999 SERIES I

Polamco

**Interconnect Solutions Worldwide**

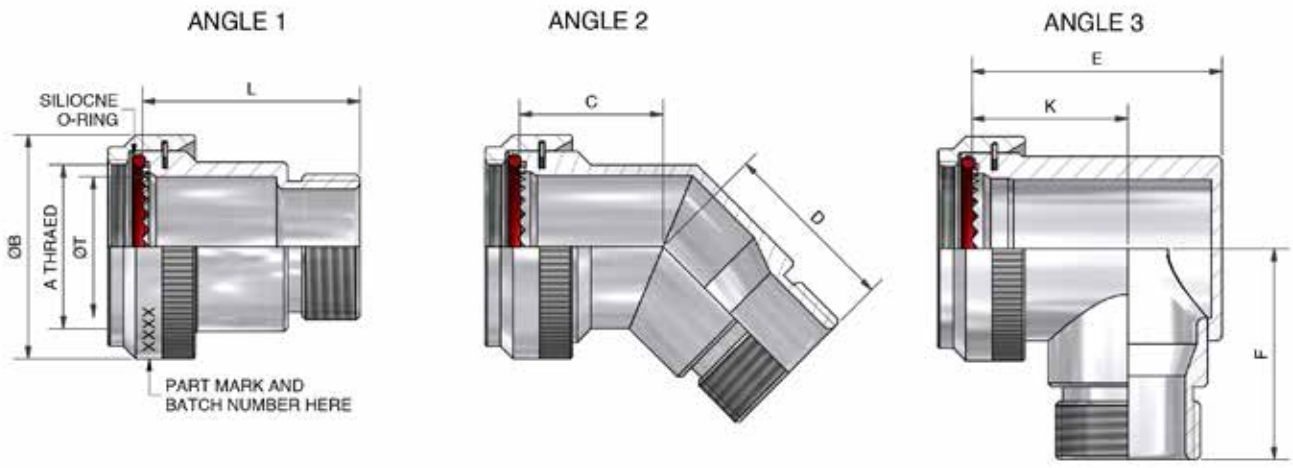


ALL THREAD TYPES AVAILABLE IN EACH OF THE ANGLES.
PLEASE SEE OPPOSITE PAGE FOR PART NUMBER CONFIGURATION

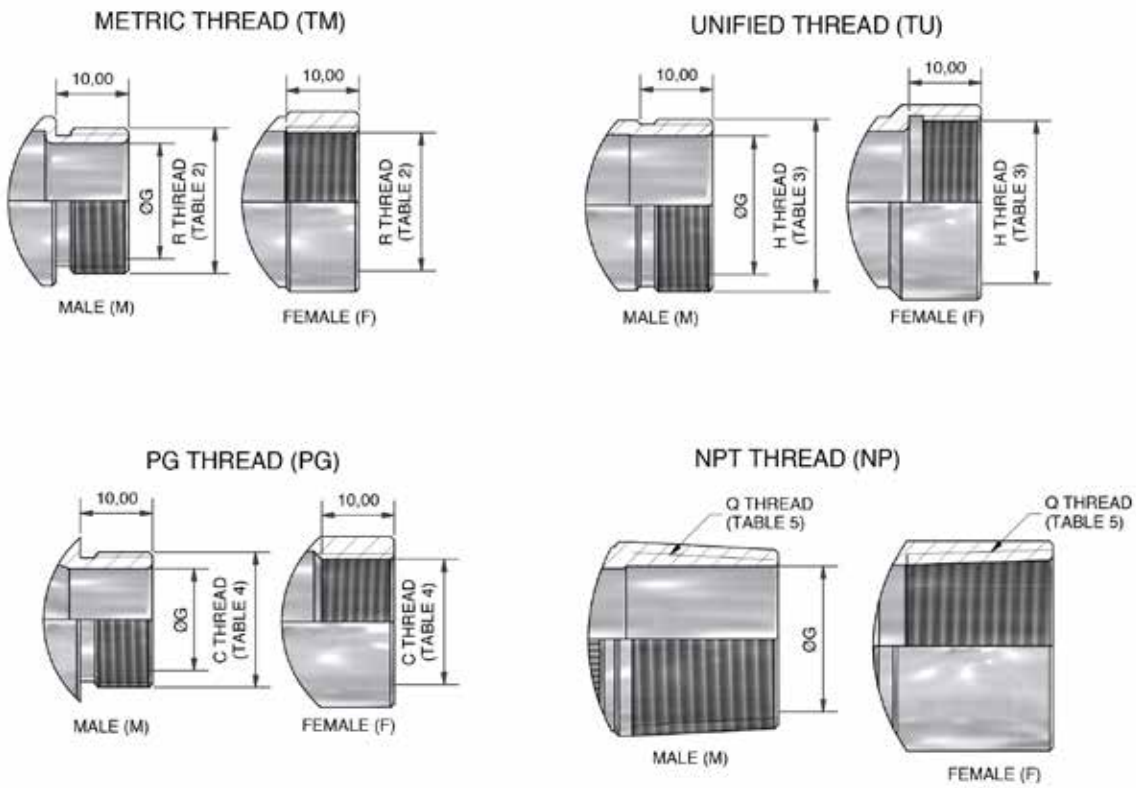


DRAWING NOT TO SCALE, DIMENSIONS IN MM

See pages 18-26 for complete list of available materials, finishes and Connector interfaces
(dimensions, form and O Ring subject to change depending on Backshell material and Connector interface)



THIS DRAWING IS THE PROPERTY OF POLAMCO LTD AND MUST NOT BE USED FOR COMMERCIAL PURPOSES WITHOUT WRITTEN CONSENT OF THE COMPANY

# Metric / Unified / PG / NPT Thread Adaptor

## Interface F - MIL-DTL-38999 SERIES I

Polamco

**Interconnect Solutions Worldwide**

TABLE 1

| SHELL SIZE | A THREAD | ØB MAX | ØT MIN | C ±0,5 | D(TM,TU, PG) MAX | D(NPM) MAX | D(NPF) MAX | E MAX | F(TM,TU, PG) ± 0,4 | K ±0,5 |
|---|---|---|---|---|---|---|---|---|---|---|
| 09 | 7/16-28UNEF | 18,0 | 6,8 | 16,4 | 22,0 | 24,1 | 19,0 | 22,7 | 21,5 | 15,0 |
| 11 | 9/16-24UNEF | 21,0 | 10,2 | 17,2 | 22,5 | 24,3 | 19,0 | 26,2 | 23,0 | 17,0 |
| 13 | 11/16-24UNEF | 24,5 | 13,1 | 17,6 | 23,0 | 28,9 | 22,6 | 29,2 | 25,0 | 18,0 |
| 15 | 13/16-20UNEF | 27,8 | 16,2 | 18,5 | 23,5 | 29,2 | 23,1 | 32,2 | 27,0 | 20,0 |
| 17 | 15/16-20UNEF | 30,8 | 19,3 | 19,2 | 24,5 | 34,0 | 24,6 | 35,7 | 29,0 | 21,5 |
| 19 | 1 1/16-18UNEF | 34,1 | 22,3 | 19,6 | 25,5 | 34,6 | 25,1 | 39,7 | 30,5 | 23,0 |
| 21 | 1 3/16-18UNEF | 37,3 | 25,8 | 20,4 | 26,0 | 35,2 | 25,1 | 42,2 | 31,0 | 25,0 |
| 23 | 1 5/16-18UNEF | 41,0 | 28,3 | 20,8 | 26,5 | 35,9 | 26,7 | 45,2 | 32,5 | 26,0 |
| 25 | 1 7/16-18UNEF | 43,7 | 31,5 | 21,7 | 27,0 | 47,4 | 32,7 | 48,2 | 34,5 | 28,0 |

TABLE 1: LENGTH 'F MAX' FOR NPM THREAD

| SHELL SIZE / NPT | 09 | 11 | 13 | 15 | 17 | 19 | 21 | 23 | 25 |
|---|---|---|---|---|---|---|---|---|---|
| 0250 | 30,3 | 32,1 | 33,6 | 35,1 | 36,8 | 38,0 | 40,0 | 41,5 | 43,0 |
| 0375 | 30,5 | 32,3 | 33,8 | 35,3 | 37,0 | 38,2 | 40,2 | 41,7 | 43,2 |
| 0500 | 35,1 | 36,9 | 38,4 | 39,9 | 41,6 | 42,8 | 44,8 | 46,3 | 47,8 |
| 0750 | 35,4 | 37,2 | 38,7 | 40,2 | 41,9 | 43,1 | 45,1 | 46,6 | 48,1 |
| 1000 | 40,2 | 42,0 | 43,5 | 45,0 | 46,7 | 47,9 | 49,9 | 51,4 | 52,9 |
| 1250 | 40,8 | 42,6 | 44,1 | 45,6 | 47,3 | 48,5 | 50,5 | 52,0 | 53,5 |
| 1500 | 41,2 | 43,0 | 44,5 | 46,0 | 47,7 | 48,9 | 50,9 | 52,4 | 53,9 |
| 2000 | 42,1 | 43,8 | 45,3 | 46,9 | 48,6 | 49,8 | 51,8 | 53,3 | 54,8 |
| 2500 | 53,6 | 55,4 | 56,9 | 58,4 | 60,1 | 61,3 | 63,3 | 64,8 | 66,3 |

TABLE 1: LENGTH 'F MAX' FOR NPF THREAD

| SHELL SIZE / NPT | 09 | 11 | 13 | 15 | 17 | 19 | 21 | 23 | 25 |
|---|---|---|---|---|---|---|---|---|---|
| 0250 | 25,2 | 27,0 | 28,5 | 29,0 | 31,0 | 31,0 | 32,0 | 32,0 | 35,0 |
| 0375 | 25,2 | 27,0 | 28,5 | 29,0 | 31,0 | 31,0 | 32,0 | 32,0 | 35,0 |
| 0500 | 28,8 | 30,5 | 32,0 | 32,0 | 34,0 | 34,0 | 36,0 | 36,0 | 39,0 |
| 0750 | 29,3 | 31,0 | 32,5 | 34,0 | 35,0 | 35,0 | 36,0 | 36,0 | 39,0 |
| 1000 | 30,8 | 32,6 | 34,1 | 36,0 | 38,0 | 38,0 | 39,0 | 39,0 | 42,0 |
| 1250 | 31,3 | 33,1 | 34,6 | 36,0 | 38,0 | 38,0 | 39,0 | 39,0 | 43,0 |
| 1500 | 31,3 | 33,1 | 34,6 | 36,0 | 38,0 | 38,0 | 39,0 | 39,0 | 43,0 |
| 2000 | 32,9 | 34,7 | 36,2 | 37,0 | 39,0 | 39,0 | 40,0 | 40,0 | 43,0 |
| 2500 | 38,9 | 40,6 | 42,1 | 46,0 | 48,0 | 48,0 | 50,0 | 50,0 | 53,0 |

TABLE 2: METRIC THREAD (TM)

| DASH NUMBER | R THREAD | ØG |
|---|---|---|
| 16 | M16x1.5 | 11,85 |
| 20 | M20x1.5 | 15,85 |
| 22 | M22x1.5 | 17,85 |
| 25 | M25x1.5 | 20,85 |
| 32 | M32x1.5 | 27,85 |
| 40 | M40x1.5 | 35,85 |

TABLE 3: UNIFIED THREAD (TU)

| DASH NUMBER | H THREAD | ØG |
|---|---|---|
| 04 | 7/16-28UNEF | 6,35 |
| 05 | 1/2-20UNF | 7,92 |
| 06 | 9/16-24UNEF | 9,52 |
| 07 | 5/8-24UNEF | 11,12 |
| 08 | 11/16-24UNEF | 12,70 |
| 09 | 3/4-20UNEF | 14,27 |
| 10 | 13/16-20UNEF | 15,88 |
| 11 | 7/8-20UNEF | 17,46 |
| 12 | 15/16-20UNEF | 19,05 |
| 13 | 1-20UNEF | 20,64 |
| 14 | 1 1/16-18UNEF | 22,23 |
| 15 | 1 1/8-18UNEF | 23,81 |
| 16 | 1 3/16-18UNEF | 25,40 |
| 17 | 1 1/4-18UNEF | 26,99 |
| 18 | 1 5/16-18UNEF | 28,58 |
| 19 | 1 3/8-18UNEF | 30,16 |
| 21 | 1 1/2-18UNEF | 33,34 |
| 23 | 1 5/8-18UNEF | 36,51 |

TABLE 4: PG THREAD (PG)

| DASH NUMBER | C THREAD | ØG |
|---|---|---|
| 7 | PG7 | 8,0 |
| 9 | PG9 | 10,6 |
| 11 | PG11 | 14,0 |
| 13.5 | PG13.5 | 15,8 |
| 16 | PG16 | 17,9 |
| 21 | PG21 | 23,5 |
| 29 | PG29 | 32,1 |

TMMF1-17-20-1-C-L30

- SERIES
  - TM - METRIC THREAD
  - TU - UNIFIED THREAD
  - PG - PG THREAD
  - NP - NPT THREAD
- ORIENTATION
  - M - MALE
  - F - FEMALE
- CONNECTOR INTERFACE
- ANGLE
- ORDER NUMBER (TABLE 1)
- DASH NUMBER
  - DEPENDS ON THREAD - TABLE 2, 3, 4 & 5
- MATERIAL (TABLE 6)
- FINISH (TABLE 6)
- LENGTH CODE IN MM (STRAIGHT ONLY)
  - 5MM INCREMENTS, MIN LENGTH 25,00MM, EXCEPT FOR NPT THREAD - SEE TABLE 5

TABLE 5: NPT THREAD (NP)

| DASH NUMBER | Q THREAD DESIGNATION | ØG | L(M) MIN | L(F) MIN |
|---|---|---|---|---|
| 0250 | 1/4 NPT | 7,60 | 25,00 | 25,00 |
| 0375 | 3/8 NPT | 11,00 | 26,00 | 26,00 |
| 0500 | 1/2 NPT | 14,70 | 30,00 | 30,00 |
| 0750 | 3/4 NPT | 20,00 | 30,00 | 30,00 |
| 1000 | 1 NPT | 26,20 | 35,00 | 35,00 |
| 1250 | 1 1/4 NPT | 35,00 | 36,00 | 36,00 |
| 1500 | 1 1/2 NPT | 41,00 | 36,00 | 36,00 |
| 2000 | 2 NPT | 53,00 | 37,00 | 37,00 |
| 2500 | 2 1/2 NPT | 64,50 | 50,00 | 50,00 |

TABLE 6

| CODE | MATERIAL / PLATING |
|---|---|
| 1-C | ALUMINIUM / ELECTROLESS NICKEL |
| 1-B | ALUMINIUM / CADMIUM OLIVE DRAB OVER ELECTROLESS NICKEL |
| 1-ZB | ALUMINIUM / ZINC COBALT OLIVE DRAB OVER ELECTROLESS NICKEL |
| 1-ZN | ALUMINIUM / ZINC NICKEL BLACK PASSIVATE OVER ELECTROLESS NICKEL |

LIST NOT EXHAUSTIVE, SEE PLATING TABLE FOR OTHER OPTIONS

DRAWING NOT TO SCALE, DIMENSIONS IN MM

See pages 18-26 for complete list of available materials, finishes and Connector interfaces
(dimensions, form and O Ring subject to change depending on Backshell material and Connector interface)

THIS DRAWING IS THE PROPERTY OF POLAMCO LTD AND MUST NOT BE USED FOR COMMERCIAL PURPOSES WITHOUT WRITTEN CONSENT OF THE COMPANY

# Metric / Unified / PG / NPT Thread Adaptor

## Interface F - MIL-DTL-38999 SERIES II

Polamco

**Interconnect Solutions Worldwide**

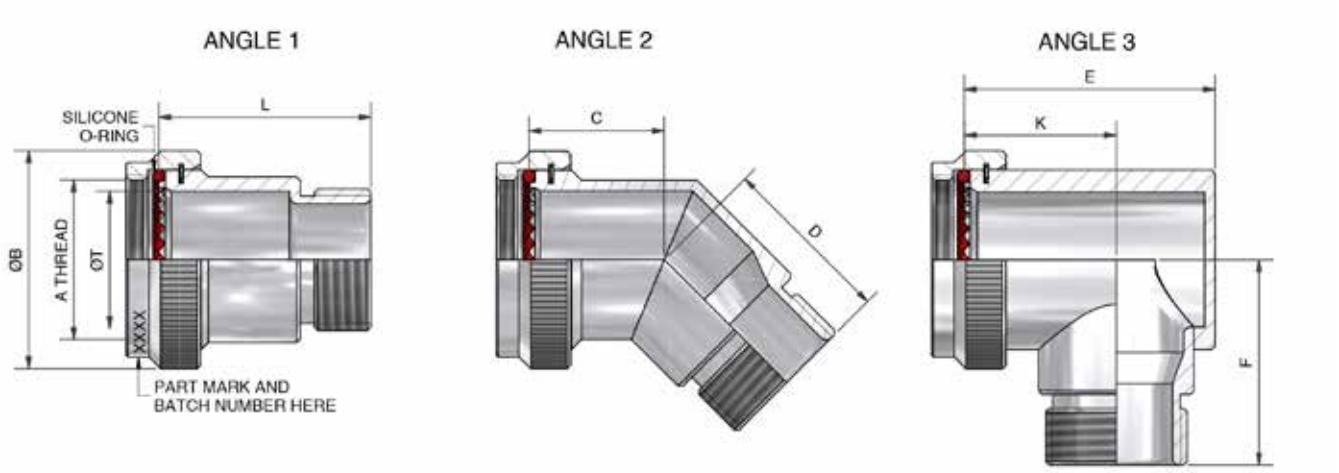


ALL THREAD TYPES AVAILABLE IN EACH OF THE ANGLES.
PLEASE SEE OPPOSITE PAGE FOR PART NUMBER CONFIGURATION

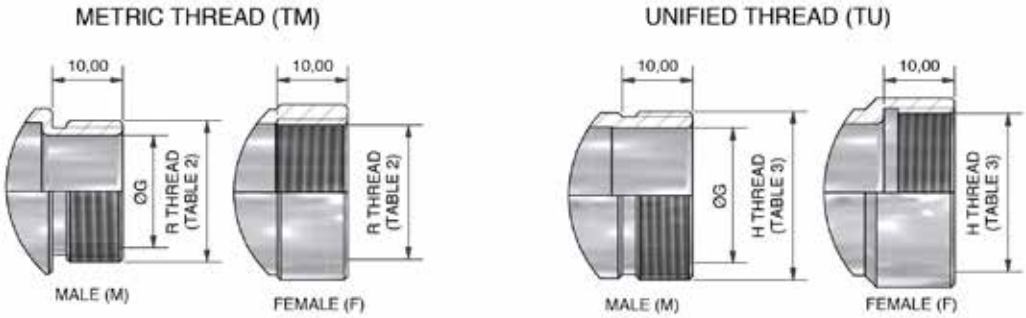


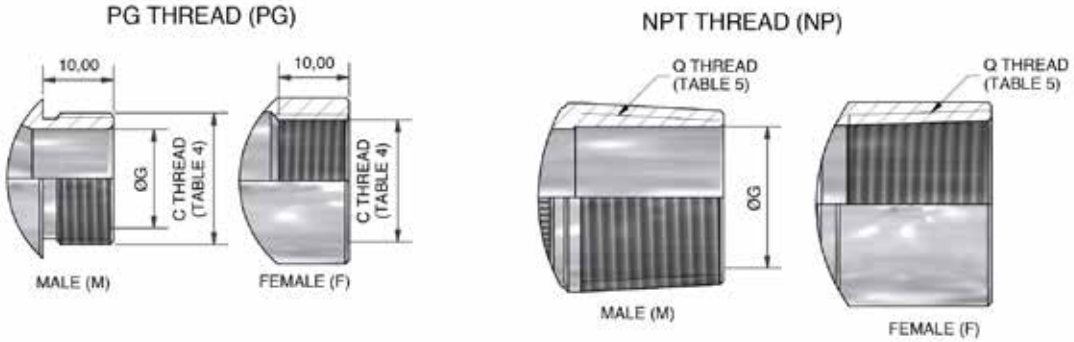


DRAWING NOT TO SCALE, DIMENSIONS IN MM

See pages 18-26 for complete list of available materials, finishes and Connector interfaces
(dimensions, form and O Ring subject to change depending on Backshell material and Connector interface)



THIS DRAWING IS THE PROPERTY OF POLAMCO LTD AND MUST NOT BE USED FOR COMMERCIAL PURPOSES WITHOUT WRITTEN CONSENT OF THE COMPANY

# Metric / Unified / PG / NPT Thread Adaptor

## Interface F - MIL-DTL-38999 SERIES II

Polamco

**Interconnect Solutions Worldwide**

TABLE 1

| SHELL SIZE | A THREAD | ØB MAX | ØT MIN | C ±0,5 | D(TM,TU, PG) MAX | D(NPM) MAX | D(NPF) MAX | E MAX | F(TM,TU, PG) ± 0,4 | K ±0,5 |
|---|---|---|---|---|---|---|---|---|---|---|
| 08 | 7/16-28UNEF | 18,3 | 6,6 | 16,4 | 22,0 | 24,1 | 19,0 | 22,7 | 21,5 | 15,0 |
| 10 | 9/16-24UNEF | 21,5 | 10,0 | 17,2 | 22,5 | 24,3 | 19,0 | 26,2 | 23,0 | 17,0 |
| 12 | 11/16-24UNEF | 24,5 | 12,9 | 17,6 | 23,0 | 28,9 | 22,6 | 29,2 | 25,0 | 18,0 |
| 14 | 13/16-20UNEF | 27,8 | 16,1 | 18,5 | 23,5 | 29,2 | 23,1 | 32,2 | 27,0 | 20,0 |
| 16 | 15/16-20UNEF | 30,8 | 19,3 | 19,2 | 24,5 | 34,0 | 24,6 | 35,7 | 29,0 | 21,5 |
| 18 | 1 1/16-18UNEF | 34,1 | 21,7 | 19,6 | 25,5 | 34,6 | 25,1 | 39,7 | 30,5 | 23,0 |
| 20 | 1 3/16-18UNEF | 37,3 | 24,8 | 20,4 | 26,0 | 35,2 | 25,1 | 42,2 | 31,0 | 25,0 |
| 22 | 1 5/16-18UNEF | 40,5 | 28,2 | 20,8 | 26,5 | 35,9 | 26,7 | 45,2 | 32,5 | 26,0 |
| 24 | 1 7/16-18UNEF | 43,7 | 31,3 | 21,7 | 27,0 | 47,4 | 32,7 | 48,2 | 34,5 | 28,0 |

TABLE 1: LENGTH 'F MAX' FOR NPM THREAD

| SHELL SIZE / NPT | 08 | 10 | 12 | 14 | 16 | 18 | 20 | 22 | 24 |
|---|---|---|---|---|---|---|---|---|---|
| 0250 | 30,3 | 32,1 | 33,6 | 35,1 | 36,8 | 38,4 | 40,0 | 41,5 | 43,0 |
| 0375 | 30,5 | 32,3 | 33,8 | 35,3 | 37,0 | 38,6 | 40,2 | 41,7 | 43,2 |
| 0500 | 35,1 | 36,9 | 38,4 | 39,9 | 41,6 | 43,2 | 44,8 | 46,3 | 47,8 |
| 0750 | 35,4 | 37,2 | 38,7 | 40,2 | 41,9 | 43,5 | 45,1 | 46,6 | 48,1 |
| 1000 | 40,2 | 42,0 | 43,5 | 45,0 | 46,7 | 48,3 | 49,9 | 51,4 | 52,9 |
| 1250 | 40,8 | 42,6 | 44,1 | 45,6 | 47,3 | 48,9 | 50,5 | 52,0 | 53,5 |
| 1500 | 41,3 | 43,0 | 44,5 | 46,0 | 47,7 | 49,3 | 50,9 | 52,4 | 53,9 |
| 2000 | 42,1 | 43,9 | 45,4 | 46,9 | 48,6 | 50,2 | 51,8 | 53,3 | 54,8 |
| 2500 | 53,6 | 55,4 | 56,9 | 58,4 | 60,0 | 61,7 | 63,3 | 64,8 | 66,3 |

TABLE 1: LENGTH 'F MAX' FOR NPF THREAD

| SHELL SIZE / NPT | 08 | 10 | 12 | 14 | 16 | 18 | 20 | 22 | 24 |
|---|---|---|---|---|---|---|---|---|---|
| 0250 | 25,2 | 27,0 | 28,5 | 29,0 | 31,0 | 31,0 | 32,0 | 32,0 | 35,0 |
| 0375 | 25,2 | 27,0 | 28,5 | 29,0 | 31,0 | 31,0 | 32,0 | 32,0 | 35,0 |
| 0500 | 28,8 | 30,5 | 32,0 | 32,0 | 34,0 | 34,0 | 36,0 | 36,0 | 39,0 |
| 0750 | 29,3 | 31,0 | 32,5 | 34,0 | 35,0 | 35,0 | 36,0 | 36,0 | 39,0 |
| 1000 | 30,8 | 32,6 | 34,1 | 36,0 | 38,0 | 38,0 | 39,0 | 39,0 | 42,0 |
| 1250 | 31,3 | 33,1 | 34,6 | 36,0 | 38,0 | 38,0 | 39,0 | 39,0 | 43,0 |
| 1500 | 31,3 | 33,1 | 34,6 | 36,0 | 38,0 | 38,0 | 39,0 | 39,0 | 43,0 |
| 2000 | 32,9 | 34,7 | 36,2 | 37,0 | 39,0 | 39,0 | 40,0 | 40,0 | 43,0 |
| 2500 | 38,9 | 40,6 | 42,1 | 46,0 | 48,0 | 48,0 | 50,0 | 50,0 | 53,0 |

TABLE 2: METRIC THREAD (TM)

| DASH NUMBER | R THREAD | ØG |
|---|---|---|
| 16 | M16x1.5 | 11,85 |
| 20 | M20x1.5 | 15,85 |
| 22 | M22x1.5 | 17,85 |
| 25 | M25x1.5 | 20,85 |
| 32 | M32x1.5 | 27,85 |
| 40 | M40x1.5 | 35,85 |

TABLE 3: UNIFIED THREAD (TU)

| DASH NUMBER | H THREAD | ØG |
|---|---|---|
| 04 | 7/16-28UNEF | 6,35 |
| 05 | 1/2-20UNF | 7,92 |
| 06 | 9/16-24UNEF | 9,52 |
| 07 | 5/8-24UNEF | 11,12 |
| 08 | 11/16-24UNEF | 12,70 |
| 09 | 3/4-20UNEF | 14,27 |
| 10 | 13/16-20UNEF | 15,88 |
| 11 | 7/8-20UNEF | 17,46 |
| 12 | 15/16-20UNEF | 19,05 |
| 13 | 1-20UNEF | 20,64 |
| 14 | 1 1/16-18UNEF | 22,23 |
| 15 | 1 1/8-18UNEF | 23,81 |
| 16 | 1 3/16-18UNEF | 25,40 |
| 17 | 1 1/4-18UNEF | 26,99 |
| 18 | 1 5/16-18UNEF | 28,58 |
| 19 | 1 3/8-18UNEF | 30,16 |
| 21 | 1 1/2-18UNEF | 33,34 |
| 23 | 1 5/8-18UNEF | 36,51 |

TABLE 4: PG THREAD (PG)

| DASH NUMBER | C THREAD | ØG |
|---|---|---|
| 7 | PG7 | 8,0 |
| 9 | PG9 | 10,6 |
| 11 | PG11 | 14,0 |
| 13.5 | PG13.5 | 15,8 |
| 16 | PG16 | 17,9 |
| 21 | PG21 | 23,5 |
| 29 | PG29 | 32,1 |

TMMF1-16-20-1-C-L30

- SERIES
  - TM - METRIC THREAD
  - TU - UNIFIED THREAD
  - PG - PG THREAD
  - NP - NPT THREAD
- ORIENTATION
  - M - MALE
  - F - FEMALE
- CONNECTOR INTERFACE
- ANGLE
- ORDER NUMBER (TABLE 1)
- DASH NUMBER
  - DEPENDS ON THREAD - TABLE 2, 3, 4 & 5
- MATERIAL (TABLE 6)
- FINISH (TABLE 6)
- LENGTH CODE IN MM (STRAIGHT ONLY)
  - 5MM INCREMENTS, MIN LENGTH 25,00MM, EXCEPT FOR NPT THREAD - SEE TABLE 5

TABLE 5: NPT THREAD (NP)

| DASH NUMBER | Q THREAD DESIGNATION | ØG | L(M) MIN | L(F) MIN |
|---|---|---|---|---|
| 0250 | 1/4 NPT | 7,60 | 25,00 | 25,00 |
| 0375 | 3/8 NPT | 11,00 | 26,00 | 26,00 |
| 0500 | 1/2 NPT | 14,70 | 30,00 | 30,00 |
| 0750 | 3/4 NPT | 20,00 | 30,00 | 30,00 |
| 1000 | 1 NPT | 26,20 | 35,00 | 35,00 |
| 1250 | 1 1/4 NPT | 35,00 | 36,00 | 36,00 |
| 1500 | 1 1/2 NPT | 41,00 | 36,00 | 36,00 |
| 2000 | 2 NPT | 53,00 | 37,00 | 37,00 |
| 2500 | 2 1/2 NPT | 64,50 | 50,00 | 50,00 |

TABLE 6

| CODE | MATERIAL / PLATING |
|---|---|
| 1-C | ALUMINIUM / ELECTROLESS NICKEL |
| 1-B | ALUMINIUM / CADMIUM OLIVE DRAB OVER ELECTROLESS NICKEL |
| 1-ZB | ALUMINIUM / ZINC COBALT OLIVE DRAB OVER ELECTROLESS NICKEL |
| 1-ZN | ALUMINIUM / ZINC NICKEL BLACK PASSIVATE OVER ELECTROLESS NICKEL |

LIST NOT EXHAUSTIVE, SEE PLATING TABLE FOR OTHER OPTIONS

DRAWING NOT TO SCALE, DIMENSIONS IN MM

See pages 18-26 for complete list of available materials, finishes and Connector interfaces
(dimensions, form and O Ring subject to change depending on Backshell material and Connector interface)

THIS DRAWING IS THE PROPERTY OF POLAMCO LTD AND MUST NOT BE USED FOR COMMERCIAL PURPOSES WITHOUT WRITTEN CONSENT OF THE COMPANY

# Metric / Unified / PG / NPT Thread Adaptor

## Interface H - MIL-DTL-38999 SERIES III & IV

Polamco

**Interconnect Solutions Worldwide**

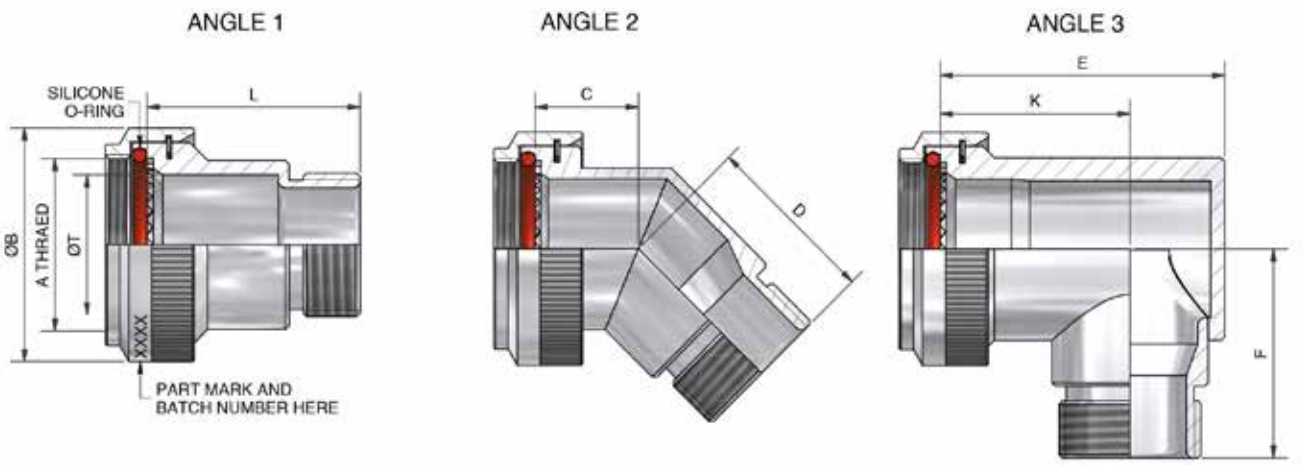


ALL THREAD TYPES AVAILABLE IN EACH OF THE ANGLES.
PLEASE SEE OPPOSITE PAGE FOR PART NUMBER CONFIGURATION

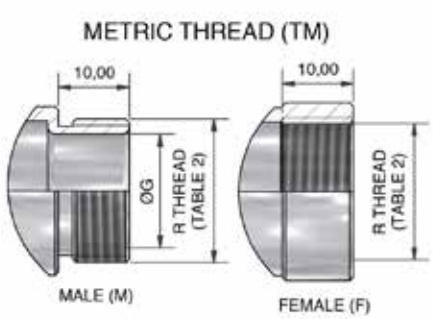


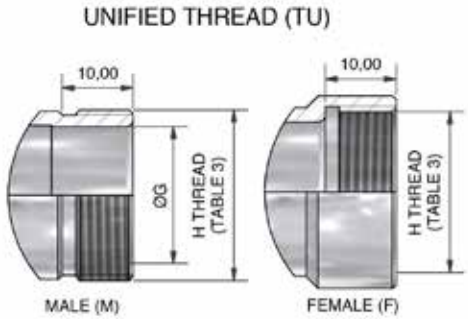


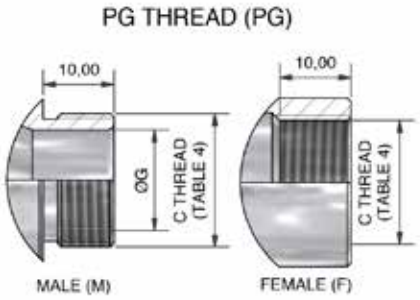


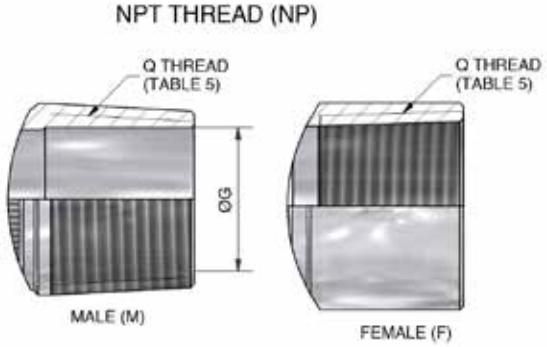


DRAWING NOT TO SCALE, DIMENSIONS IN MM

See pages 18-26 for complete list of available materials, finishes and Connector interfaces
(dimensions, form and O Ring subject to change depending on Backshell material and Connector interface)



THIS DRAWING IS THE PROPERTY OF POLAMCO LTD AND MUST NOT BE USED FOR COMMERCIAL PURPOSES WITHOUT WRITTEN CONSENT OF THE COMPANY

# Metric / Unified / PG / NPT Thread Adaptor

## Interface H - MIL-DTL-38999 SERIES III & IV

Polamco

**Interconnect Solutions Worldwide**

TABLE 1

| SHELL SIZE | A THREAD | ØB MAX | ØT MIN | C ±0,5 | D(TM,TU, PG) MAX | D(NPM) MAX | D(NPF) MAX | E MAX | F(TM,TU, PG) ± 0,4 | K ±0,5 |
|---|---|---|---|---|---|---|---|---|---|---|
| 09 | M12x1.0 | 18,0 | 6,7 | 13,1 | 22,0 | 24,1 | 19,0 | 25,7 | 21,5 | 17,5 |
| 11 | M15x1.0 | 21,0 | 10,2 | 13,9 | 22,5 | 24,3 | 19,0 | 26,7 | 23,0 | 17,5 |
| 13 | M18x1.0 | 24,5 | 13,5 | 14,5 | 23,0 | 28,9 | 22,6 | 31,2 | 25,0 | 20,0 |
| 15 | M22x1.0 | 29,0 | 16,2 | 15,5 | 23,5 | 29,2 | 23,1 | 37,2 | 27,0 | 24,5 |
| 17 | M25x1.0 | 32,5 | 19,4 | 16,1 | 24,5 | 34,0 | 24,6 | 40,2 | 29,0 | 26,7 |
| 19 | M28x1.0 | 35,5 | 21,8 | 16,8 | 25,5 | 34,6 | 25,1 | 44,7 | 30,5 | 27,0 |
| 21 | M31x1.0 | 37,0 | 25,1 | 17,1 | 26,0 | 35,2 | 25,1 | 49,2 | 31,0 | 30,5 |
| 23 | M34x1.0 | 40,0 | 28,2 | 17,7 | 26,5 | 35,9 | 26,7 | 51,7 | 32,5 | 31,5 |
| 25 | M37x1.0 | 43,5 | 31,4 | 18,4 | 27,0 | 47,4 | 32,7 | 53,2 | 34,5 | 28,5 |

TABLE 1: LENGTH 'F MAX' FOR NPM THREAD

| SHELL SIZE / NPT | 09 | 11 | 13 | 15 | 17 | 19 | 21 | 23 | 25 |
|---|---|---|---|---|---|---|---|---|---|
| 0250 | 30,3 | 32,1 | 33,6 | 35,1 | 36,8 | 38,4 | 40,0 | 41,5 | 43,0 |
| 0375 | 30,5 | 32,3 | 33,8 | 35,3 | 37,0 | 38,6 | 40,2 | 41,7 | 43,2 |
| 0500 | 35,1 | 36,9 | 38,4 | 39,9 | 41,6 | 43,2 | 44,8 | 46,3 | 47,8 |
| 0750 | 35,4 | 37,2 | 38,7 | 40,2 | 41,9 | 43,5 | 45,1 | 46,6 | 48,1 |
| 1000 | 40,2 | 42,0 | 43,5 | 45,0 | 46,7 | 48,3 | 49,9 | 51,4 | 52,9 |
| 1250 | 40,8 | 42,6 | 44,1 | 45,6 | 47,3 | 48,9 | 50,5 | 52,0 | 53,5 |
| 1500 | 41,2 | 43,0 | 44,5 | 46,0 | 47,7 | 49,3 | 50,9 | 52,4 | 53,9 |
| 2000 | 42,1 | 43,8 | 45,3 | 46,9 | 48,6 | 50,1 | 51,8 | 53,3 | 54,8 |
| 2500 | 53,6 | 55,4 | 56,9 | 58,4 | 60,1 | 61,7 | 63,3 | 64,8 | 66,3 |

TABLE 1: LENGTH 'F MAX' FOR NPF THREAD

| SHELL SIZE / NPT | 09 | 11 | 13 | 15 | 17 | 19 | 21 | 23 | 25 |
|---|---|---|---|---|---|---|---|---|---|
| 0250 | 25,2 | 27,0 | 28,5 | 29,0 | 31,0 | 31,0 | 32,0 | 32,0 | 35,0 |
| 0375 | 25,2 | 27,0 | 28,5 | 29,0 | 31,0 | 31,0 | 32,0 | 32,0 | 35,0 |
| 0500 | 28,8 | 30,5 | 32,0 | 32,0 | 34,0 | 34,0 | 36,0 | 36,0 | 39,0 |
| 0750 | 29,3 | 31,0 | 32,5 | 34,0 | 35,0 | 35,0 | 36,0 | 36,0 | 39,0 |
| 1000 | 30,8 | 32,6 | 34,1 | 36,0 | 38,0 | 38,0 | 39,0 | 39,0 | 42,0 |
| 1250 | 31,3 | 33,1 | 34,6 | 36,0 | 38,0 | 38,0 | 39,0 | 39,0 | 43,0 |
| 1500 | 31,3 | 33,1 | 34,6 | 36,0 | 38,0 | 38,0 | 39,0 | 39,0 | 43,0 |
| 2000 | 32,9 | 34,7 | 36,2 | 37,0 | 39,0 | 39,0 | 40,0 | 40,0 | 43,0 |
| 2500 | 38,9 | 40,6 | 42,1 | 46,0 | 48,0 | 48,0 | 50,0 | 50,0 | 53,0 |

TABLE 2: METRIC THREAD (TM)

| DASH NUMBER | R THREAD | ØG |
|---|---|---|
| 16 | M16x1.5 | 11,85 |
| 20 | M20x1.5 | 15,85 |
| 22 | M22x1.5 | 17,85 |
| 25 | M25x1.5 | 20,85 |
| 32 | M32x1.5 | 27,85 |
| 40 | M40x1.5 | 35,85 |

TABLE 3: UNIFIED THREAD (TU)

| DASH NUMBER | H THREAD | ØG |
|---|---|---|
| 04 | 7/16-28UNEF | 6,35 |
| 05 | 1/2-20UNF | 7,92 |
| 06 | 9/16-24UNEF | 9,52 |
| 07 | 5/8-24UNEF | 11,12 |
| 08 | 11/16-24UNEF | 12,70 |
| 09 | 3/4-20UNEF | 14,27 |
| 10 | 13/16-20UNEF | 15,88 |
| 11 | 7/8-20UNEF | 17,46 |
| 12 | 15/16-20UNEF | 19,05 |
| 13 | 1-20UNEF | 20,64 |
| 14 | 1 1/16-18UNEF | 22,23 |
| 15 | 1 1/8-18UNEF | 23,81 |
| 16 | 1 3/16-18UNEF | 25,40 |
| 17 | 1 1/4-18UNEF | 26,99 |
| 18 | 1 5/16-18UNEF | 28,58 |
| 19 | 1 3/8-18UNEF | 30,16 |
| 21 | 1 1/2-18UNEF | 33,34 |
| 23 | 1 5/8-18UNEF | 36,51 |

TABLE 4: PG THREAD (PG)

| DASH NUMBER | C THREAD | ØG |
|---|---|---|
| 7 | PG7 | 8,0 |
| 9 | PG9 | 10,6 |
| 11 | PG11 | 14,0 |
| 13.5 | PG13.5 | 15,8 |
| 16 | PG16 | 17,9 |
| 21 | PG21 | 23,5 |
| 29 | PG29 | 32,1 |

TMMH1-17-20-1-C-L30

- SERIES
  - TM - METRIC THREAD
  - TU - UNIFIED THREAD
  - PG - PG THREAD
  - NP - NPT THREAD
- ORIENTATION
  - M - MALE
  - F - FEMALE
- CONNECTOR INTERFACE
- ANGLE
- ORDER NUMBER (TABLE 1)
- DASH NUMBER
  - DEPENDS ON THREAD - TABLE 2, 3, 4 & 5
- MATERIAL (TABLE 6)
- FINISH (TABLE 6)
- LENGTH CODE IN MM (STRAIGHT ONLY)
  - 5MM INCREMENTS, MIN LENGTH 25,00MM, EXCEPT FOR NPT THREAD - SEE TABLE 5

TABLE 5: NPT THREAD (NP)

| DASH NUMBER | Q THREAD DESIGNATION | ØK MIN | L(M) MIN | L(F) MIN |
|---|---|---|---|---|
| 0250 | 1/4 NPT | 7,60 | 25,00 | 25,00 |
| 0375 | 3/8 NPT | 11,00 | 26,00 | 26,00 |
| 0500 | 1/2 NPT | 14,70 | 30,00 | 30,00 |
| 0750 | 3/4 NPT | 20,00 | 30,00 | 30,00 |
| 1000 | 1 NPT | 26,20 | 35,00 | 35,00 |
| 1250 | 1 1/4 NPT | 35,00 | 36,00 | 36,00 |
| 1500 | 1 1/2 NPT | 41,00 | 36,00 | 36,00 |
| 2000 | 2 NPT | 53,00 | 37,00 | 37,00 |
| 2500 | 2 1/2 NPT | 64,50 | 50,00 | 50,00 |

TABLE 6

| CODE | MATERIAL / PLATING |
|---|---|
| 1-C | ALUMINIUM / ELECTROLESS NICKEL |
| 1-B | ALUMINIUM / CADMIUM OLIVE DRAB OVER ELECTROLESS NICKEL |
| 1-ZB | ALUMINIUM / ZINC COBALT OLIVE DRAB OVER ELECTROLESS NICKEL |
| 1-ZN | ALUMINIUM / ZINC NICKEL BLACK PASSIVATE OVER ELECTROLESS NICKEL |

LIST NOT EXHAUSTIVE, SEE PLATING TABLE FOR OTHER OPTIONS

DRAWING NOT TO SCALE, DIMENSIONS IN MM

See pages 18-26 for complete list of available materials, finishes and Connector interfaces
(dimensions, form and O Ring subject to change depending on Backshell material and Connector interface)

THIS DRAWING IS THE PROPERTY OF POLAMCO LTD AND MUST NOT BE USED FOR COMMERCIAL PURPOSES WITHOUT WRITTEN CONSENT OF THE COMPANY

# Metric / Unified / PG / NPT Fixed Adaptor

## Interface F - MIL-DTL-38999 SERIES I & II

Polamco

**Interconnect Solutions Worldwide**

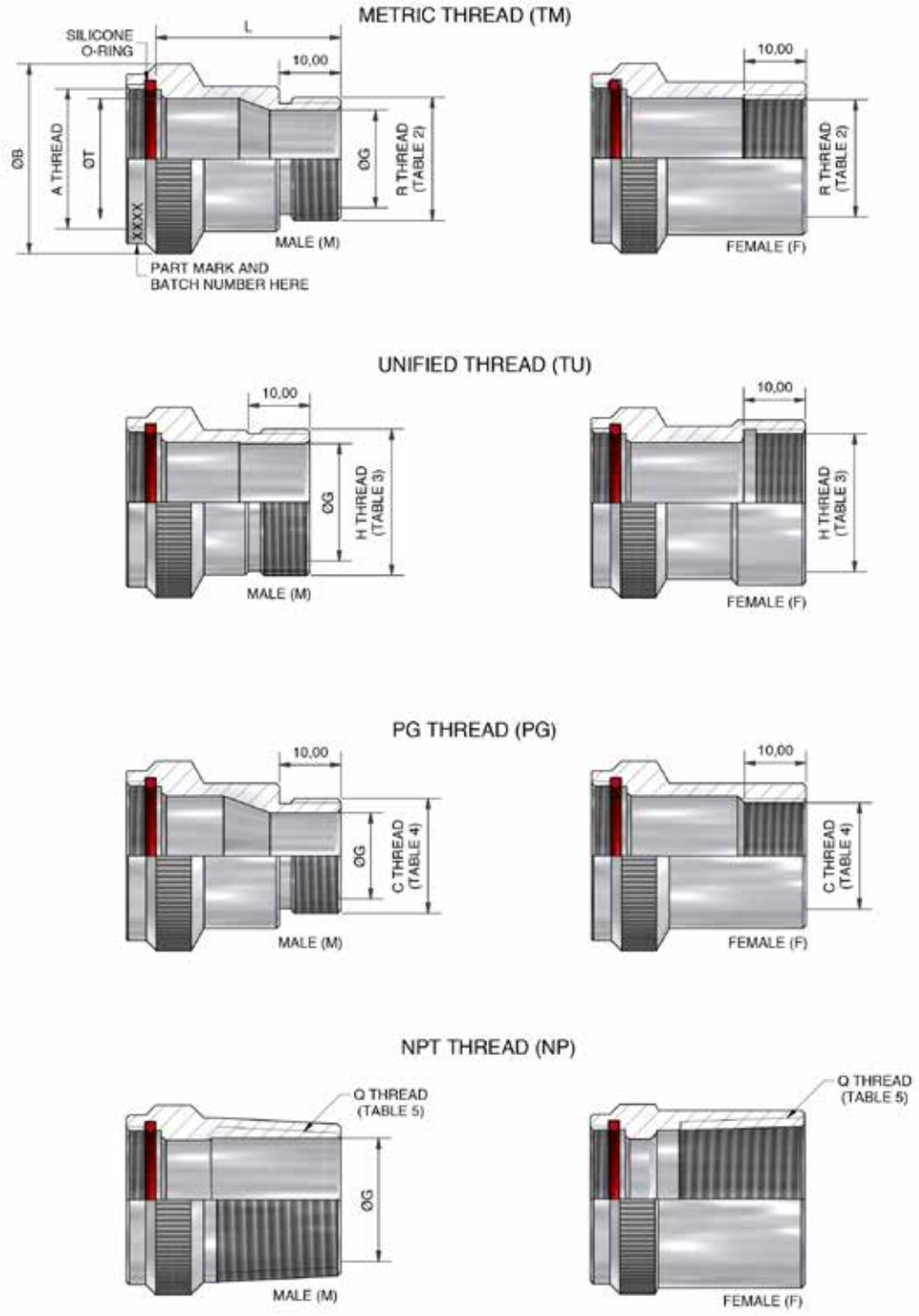


DRAWING NOT TO SCALE, DIMENSIONS IN MM

See pages 18-26 for complete list of available materials, finishes and Connector interfaces
(dimensions, form and O Ring subject to change depending on Backshell material and Connector interface)



THIS DRAWING IS THE PROPERTY OF POLAMCO LTD AND MUST NOT BE USED FOR COMMERCIAL PURPOSES WITHOUT WRITTEN CONSENT OF THE COMPANY

# Metric / Unified / PG / NPT Fixed Adaptor

## Interface F - MIL-DTL-38999 SERIES I & II

Polamco

**Interconnect Solutions Worldwide**

TABLE 1

| ORDER NUMBER | SHELL SIZE SERIES I | SHELL SIZE SERIES II | A THREAD | ØB MAX | ØT MIN |
|---|---|---|---|---|---|
| 08 | 09 | 08 | 7/16-28UNEF | 18,3 | 6,6 |
| 10 | 11 | 10 | 9/16-24UNEF | 21,5 | 10,0 |
| 12 | 13 | 12 | 11/16-24UNEF | 24,5 | 12,9 |
| 14 | 15 | 14 | 13/16-20UNEF | 27,8 | 16,1 |
| 16 | 17 | 16 | 15/16-20UNEF | 30,8 | 19,3 |
| 18 | 19 | 18 | 1 1/16-18UNEF | 34,1 | 21,7 |
| 20 | 21 | 20 | 1 3/16-18UNEF | 37,3 | 24,8 |
| 22 | 23 | 22 | 1 5/16-18UNEF | 40,5 | 28,2 |
| 24 | 25 | 24 | 1 7/16-18UNEF | 43,7 | 31,3 |

TABLE 2: METRIC THREAD (TM)

| DASH NUMBER | R THREAD | ØG |
|---|---|---|
| 16 | M16x1.5 | 11,85 |
| 20 | M20x1.5 | 15,85 |
| 22 | M22x1.5 | 17,85 |
| 25 | M25x1.5 | 20,85 |
| 32 | M32x1.5 | 27,85 |
| 40 | M40x1.5 | 35,85 |

TABLE 3: UNIFIED THREAD (TU)

| DASH NUMBER | H THREAD | ØG MIN |
|---|---|---|
| 04 | 7/16-28UNEF | 6,35 |
| 05 | 1/2-20UNF | 7,92 |
| 06 | 9/16-24UNEF | 9,52 |
| 07 | 5/8-24UNEF | 11,12 |
| 08 | 11/16-24UNEF | 12,70 |
| 09 | 3/4-20UNEF | 14,27 |
| 10 | 13/16-20UNEF | 15,88 |
| 11 | 7/8-20UNEF | 17,46 |
| 12 | 15/16-20UNEF | 19,05 |
| 13 | 1-20UNEF | 20,64 |
| 14 | 1 1/16-18UNEF | 22,23 |
| 15 | 1 1/8-18UNEF | 23,81 |
| 16 | 1 3/16-18UNEF | 25,40 |
| 17 | 1 1/4-18UNEF | 26,99 |
| 18 | 1 5/16-18UNEF | 28,58 |
| 19 | 1 3/8-18UNEF | 30,16 |
| 21 | 1 1/2-18UNEF | 33,34 |
| 23 | 1 5/8-18UNEF | 36,51 |

TABLE 4: PG THREAD (PG)

| DASH NUMBER | C THREAD | ØG |
|---|---|---|
| 7 | PG7 | 8,0 |
| 9 | PG9 | 10,6 |
| 11 | PG11 | 14,0 |
| 13.5 | PG13.5 | 15,8 |
| 16 | PG16 | 17,9 |
| 21 | PG21 | 23,5 |
| 29 | PG29 | 32,1 |

TABLE 5: NPT THREAD (NP)

| DASH NUMBER | Q THREAD DESIGNATION | ØG | L(M) MIN | L(F) MIN |
|---|---|---|---|---|
| 0250 | 1/4 NPT | 7,60 | 25,00 | 25,00 |
| 0375 | 3/8 NPT | 11,00 | 26,00 | 26,00 |
| 0500 | 1/2 NPT | 14,70 | 30,00 | 30,00 |
| 0750 | 3/4 NPT | 20,00 | 30,00 | 30,00 |
| 1000 | 1 NPT | 26,20 | 35,00 | 35,00 |
| 1250 | 1 1/4 NPT | 35,00 | 36,00 | 36,00 |
| 1500 | 1 1/2 NPT | 41,00 | 36,00 | 36,00 |
| 2000 | 2 NPT | 53,00 | 37,00 | 37,00 |
| 2500 | 2 1/2 NPT | 64,50 | 50,00 | 50,00 |

TABLE 6

| CODE | MATERIAL / PLATING |
|---|---|
| 1-C | ALUMINIUM / ELECTROLESS NICKEL |
| 1-B | ALUMINIUM / CADMIUM OLIVE DRAB OVER ELECTROLESS NICKEL |
| 1-ZB | ALUMINIUM / ZINC COBALT OLIVE DRAB OVER ELECTROLESS NICKEL |
| 1-ZN | ALUMINIUM / ZINC NICKEL BLACK PASSIVATE OVER ELECTROLESS NICKEL |
| 4-J | STAINLESS STEEL / PASSIVATE |
| 2-Z | NICKEL ALUMINIUM BRONZE / SHOT BLAST |

LIST NOT EXHAUSTIVE, SEE PLATING TABLE FOR OTHER OPTIONS

TMMF1-D16-20-1-C-L30

SERIES
- TM - METRIC THREAD
- TU - UNIFIED THREAD
- PG - PG THREAD
- NP - NPT THREAD

ORIENTATION
- M - MALE
- F - FEMALE

CONNECTOR INTERFACE
ANGLE
DIRECT COUPLING
ORDER NUMBER (TABLE 1)
DASH NUMBER
- DEPENDS ON THREAD - TABLE 2, 3, 4 & 5

MATERIAL (TABLE 6)
FINISH (TABLE 6)
LENGTH CODE IN MM
- 5MM INCREMENTS, MIN LENGTH 25,00MM, EXCEPT FOR NPT THREAD - SEE TABLE 5

DRAWING NOT TO SCALE, DIMENSIONS IN MM

See pages 18-26 for complete list of available materials, finishes and Connector interfaces
(dimensions, form and O Ring subject to change depending on Backshell material and Connector interface)

THIS DRAWING IS THE PROPERTY OF POLAMCO LTD AND MUST NOT BE USED FOR COMMERCIAL PURPOSES WITHOUT WRITTEN CONSENT OF THE COMPANY

# Metric / Unified / PG / NPT Fixed Adaptor

## Interface H - MIL-DTL-38999 SERIES III & IV

Polamco

**Interconnect Solutions Worldwide**

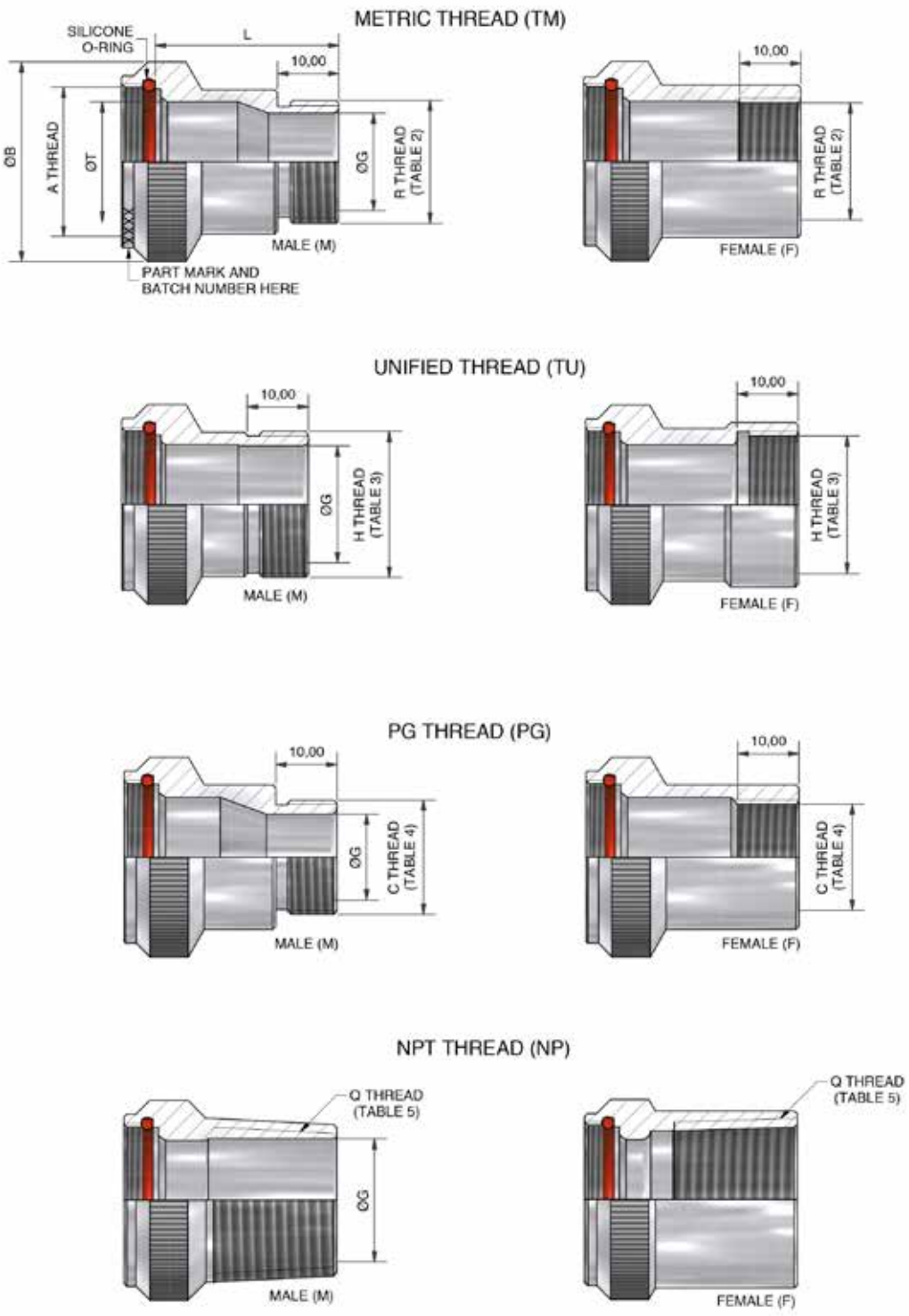


DRAWING NOT TO SCALE, DIMENSIONS IN MM

See pages 18-26 for complete list of available materials, finishes and Connector interfaces
(dimensions, form and O Ring subject to change depending on Backshell material and Connector interface)



THIS DRAWING IS THE PROPERTY OF POLAMCO LTD AND MUST NOT BE USED FOR COMMERCIAL PURPOSES WITHOUT WRITTEN CONSENT OF THE COMPANY

# Metric / Unified / PG / NPT Fixed Adaptor

## Interface H - MIL-DTL-38999 SERIES III & IV

Polamco

**Interconnect Solutions Worldwide**

TABLE 1

| SHELL SIZE | A THREAD | ØB MAX | ØT MIN |
|---|---|---|---|
| 09 | M12x1.0 | 18,0 | 6,7 |
| 11 | M15x1.0 | 21,0 | 10,2 |
| 13 | M18x1.0 | 24,5 | 13,5 |
| 15 | M22x1.0 | 29,0 | 16,2 |
| 17 | M25x1.0 | 32,5 | 19,4 |
| 19 | M28x1.0 | 35,5 | 21,8 |
| 21 | M31x1.0 | 37,0 | 25,1 |
| 23 | M34x1.0 | 40,0 | 28,2 |
| 25 | M37x1.0 | 43,5 | 31,4 |

TABLE 2: METRIC THREAD (TM)

| DASH NUMBER | R THREAD | ØG |
|---|---|---|
| 16 | M16x1.5 | 11,85 |
| 20 | M20x1.5 | 15,85 |
| 22 | M22x1.5 | 17,85 |
| 25 | M25x1.5 | 20,85 |
| 32 | M32x1.5 | 27,85 |
| 40 | M40x1.5 | 35,85 |

TABLE 3: UNIFIED THREAD (TU)

| DASH NUMBER | H THREAD | ØG |
|---|---|---|
| 04 | 7/16-28UNEF | 6,35 |
| 05 | 1/2-20UNF | 7,92 |
| 06 | 9/16-24UNEF | 9,52 |
| 07 | 5/8-24UNEF | 11,12 |
| 08 | 11/16-24UNEF | 12,70 |
| 09 | 3/4-20UNEF | 14,27 |
| 10 | 13/16-20UNEF | 15,88 |
| 11 | 7/8-20UNEF | 17,46 |
| 12 | 15/16-20UNEF | 19,05 |
| 13 | 1-20UNEF | 20,64 |
| 14 | 1 1/16-18UNEF | 22,23 |
| 15 | 1 1/8-18UNEF | 23,81 |
| 16 | 1 3/16-18UNEF | 25,40 |
| 17 | 1 1/4-18UNEF | 26,99 |
| 18 | 1 5/16-18UNEF | 28,58 |
| 19 | 1 3/8-18UNEF | 30,16 |
| 21 | 1 1/2-18UNEF | 33,34 |
| 23 | 1 5/8-18UNEF | 36,51 |

TABLE 4: PG THREAD (PG)

| DASH NUMBER | C THREAD | ØG |
|---|---|---|
| 7 | PG7 | 8,0 |
| 9 | PG9 | 10,6 |
| 11 | PG11 | 14,0 |
| 13.5 | PG13.5 | 15,8 |
| 16 | PG16 | 17,9 |
| 21 | PG21 | 23,5 |
| 29 | PG29 | 32,1 |

TABLE 5: NPT THREAD (NP)

| DASH NUMBER | Q THREAD DESIGNATION | ØK MIN | L(M) MIN | L(F) MIN |
|---|---|---|---|---|
| 0250 | 1/4 NPT | 7,60 | 25,00 | 25,00 |
| 0375 | 3/8 NPT | 11,00 | 26,00 | 26,00 |
| 0500 | 1/2 NPT | 14,70 | 30,00 | 30,00 |
| 0750 | 3/4 NPT | 20,00 | 30,00 | 30,00 |
| 1000 | 1 NPT | 26,20 | 35,00 | 35,00 |
| 1250 | 1 1/4 NPT | 35,00 | 36,00 | 36,00 |
| 1500 | 1 1/2 NPT | 41,00 | 36,00 | 36,00 |
| 2000 | 2 NPT | 53,00 | 37,00 | 37,00 |
| 2500 | 2 1/2 NPT | 64,50 | 50,00 | 50,00 |

TABLE 6

| CODE | MATERIAL / PLATING |
|---|---|
| 1-C | ALUMINIUM / ELECTROLESS NICKEL |
| 1-B | ALUMINIUM / CADMIUM OLIVE DRAB OVER ELECTROLESS NICKEL |
| 1-ZB | ALUMINIUM / ZINC COBALT OLIVE DRAB OVER ELECTROLESS NICKEL |
| 1-ZN | ALUMINIUM / ZINC NICKEL BLACK PASSIVATE OVER ELECTROLESS NICKEL |
| 4-J | STAINLESS STEEL / PASSIVATE |
| 2-Z | NICKEL ALUMINIUM BRONZE / SHOT BLAST |

LIST NOT EXHAUSTIVE, SEE PLATING TABLE FOR OTHER OPTIONS

TMMH1-D16-20-1-C-L30

SERIES
- TM - METRIC THREAD
- TU - UNIFIED THREAD
- PG - PG THREAD
- NP - NPT THREAD

ORIENTATION
- M - MALE
- F - FEMALE

CONNECTOR INTERFACE
ANGLE
DIRECT COUPLING
ORDER NUMBER (TABLE 1)
DASH NUMBER
- DEPENDS ON THREAD - TABLE 2, 3, 4 & 5

MATERIAL (TABLE 6)
FINISH (TABLE 6)
LENGTH CODE IN MM
- 5MM INCREMENTS, MIN LENGTH 25,00MM, EXCEPT FOR NPT THREAD - SEE TABLE 5

DRAWING NOT TO SCALE, DIMENSIONS IN MM

See pages 18-26 for complete list of available materials, finishes and Connector interfaces
(dimensions, form and O Ring subject to change depending on Backshell material and Connector interface)

THIS DRAWING IS THE PROPERTY OF POLAMCO LTD AND MUST NOT BE USED FOR COMMERCIAL PURPOSES WITHOUT WRITTEN CONSENT OF THE COMPANY

# DCF - Extender / Angle Adaptor

## Interface F - MIL-DTL-38999 SERIES I

Polamco

**Interconnect Solutions Worldwide**

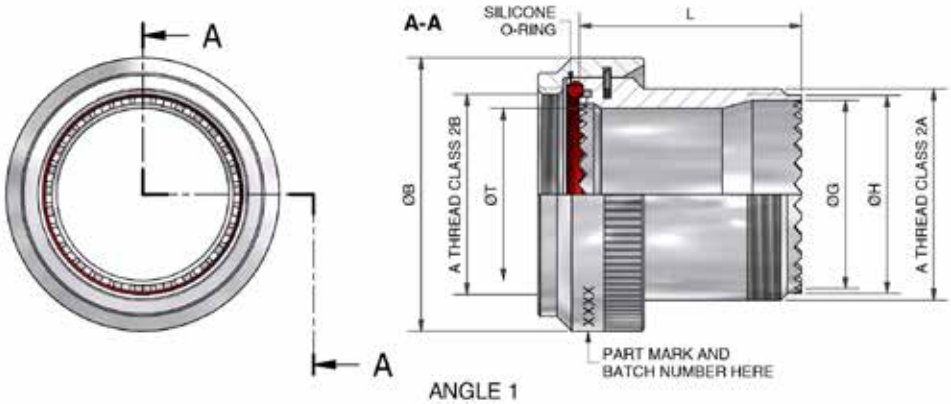


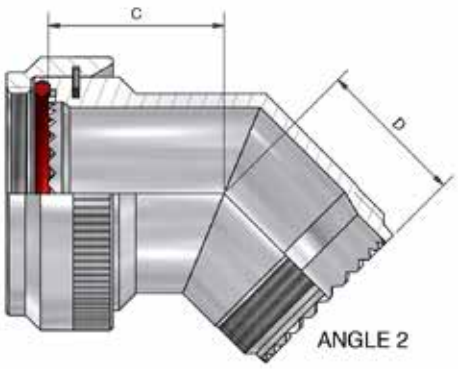


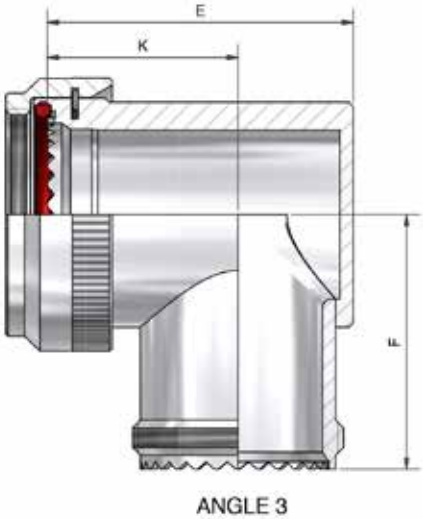


TABLE 1

| SHELL SIZE | A THREAD | ØB MAX | ØT MIN | C MAX | D MAX | E MAX | F MAX | K ± 0.5 | ØG ± 0.076 | ØH +0.02/-0.12 |
|---|---|---|---|---|---|---|---|---|---|---|
| 09 | 7/16-28UNEF | 18,0 | 6,8 | 16,4 | 15,3 | 22,7 | 21,5 | 15,0 | 8,74 | 9,83 |
| 11 | 9/16-24UNEF | 21,0 | 10,2 | 17,2 | 15,8 | 26,2 | 23,0 | 17,0 | 11,99 | 13,08 |
| 13 | 11/16-24UNEF | 24,5 | 13,1 | 17,6 | 16,8 | 29,2 | 24,5 | 18,0 | 14,88 | 15,95 |
| 15 | 13/16-20UNEF | 27,8 | 16,2 | 18,5 | 17,8 | 32,2 | 28,5 | 20,0 | 18,06 | 19,15 |
| 17 | 15/16-20UNEF | 30,8 | 19,3 | 19,2 | 18,3 | 35,7 | 30,0 | 21,5 | 21,23 | 22,33 |
| 19 | 1 1/16-18UNEF | 34,1 | 22,3 | 19,6 | 18,8 | 39,7 | 31,5 | 23,0 | 23,93 | 25,02 |
| 21 | 1 3/16-18UNEF | 37,3 | 25,8 | 20,4 | 19,3 | 42,2 | 33,0 | 25,0 | 27,10 | 28,19 |
| 23 | 1 5/16-18UNEF | 41,0 | 28,3 | 20,8 | 18,7 | 45,2 | 34,5 | 26,0 | 30,28 | 31,37 |
| 25 | 1 7/16-18UNEF | 43,7 | 31,5 | 21,7 | 20,5 | 48,2 | 36,0 | 28,0 | 33,45 | 34,54 |

TABLE 2

| CODE | FINISH |
|---|---|
| C | ELECTROLESS NICKEL |
| B | CADMIUM OLIVE DRAB OVER ELECTROLESS NICKEL |
| ZB | ZINC COBALT OLIVE DRAB OVER ELECTROLESS NICKEL |
| ZN | ZINC NICKEL BLACK PASSIVATE OVER ELECTROLESS NICKEL |

LIST NOT EXHAUSTIVE, FOR COMPREHENSIVE LIST AND SPECS, SEE WEBSITE

**DCF1-17-1-C-L25**

- SERIES
- CONNECTOR INTERFACE
- ANGLE
- SHELL SIZE (TABLE 1)
- MATERIAL
  - ALUMINIUM ALLOY
- FINISH (TABLE 2)
- LENGTH CODE IN MM
  - STRAIGHT ONLY

DRAWING NOT TO SCALE, DIMENSIONS IN MM

See pages 18-26 for complete list of available materials, finishes and Connector interfaces
(dimensions, form and O Ring subject to change depending on Backshell material and Connector interface)



THIS DRAWING IS THE PROPERTY OF POLAMCO LTD AND MUST NOT BE USED FOR COMMERCIAL PURPOSES WITHOUT WRITTEN CONSENT OF THE COMPANY

# DCF - Extender / Angle Adaptor

## Interface F - MIL-DTL-38999 SERIES II

Polamco

**Interconnect Solutions Worldwide**

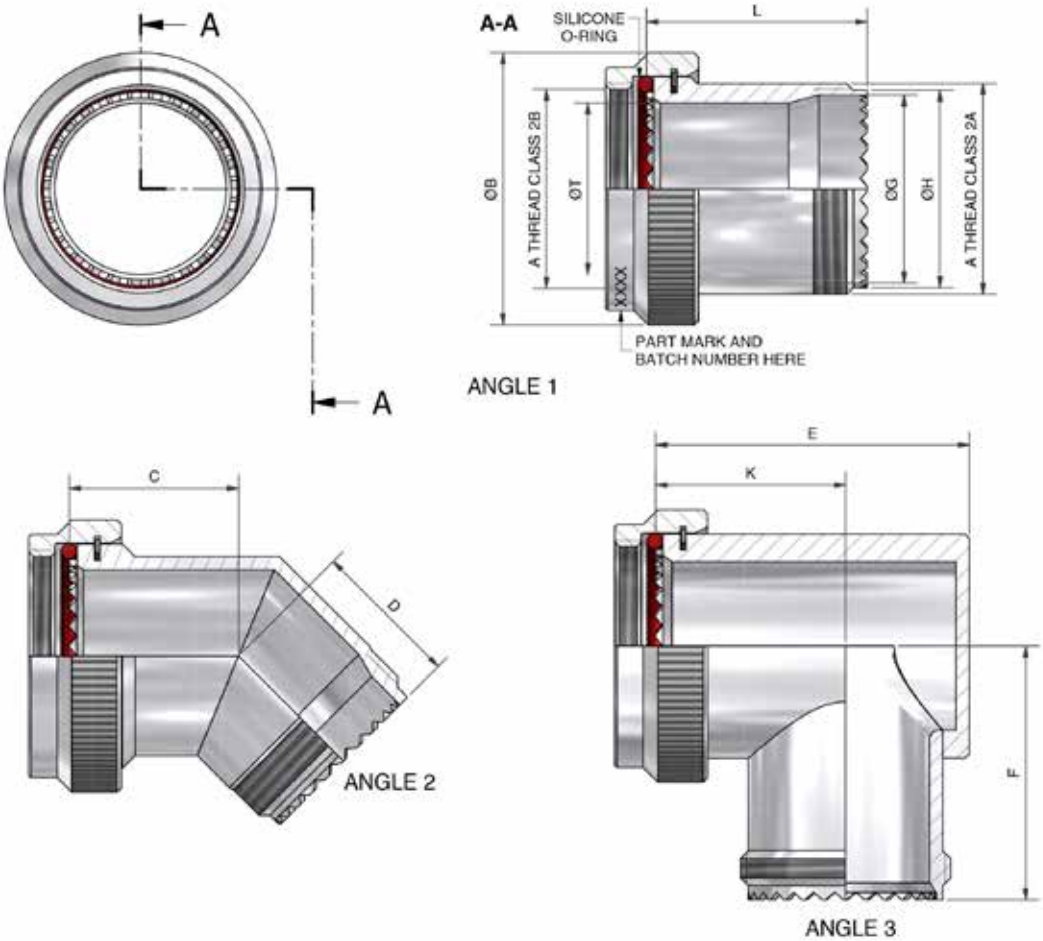


TABLE 1

| SHELL SIZE | A THREAD | ØB MAX | ØT MIN | C ± 0,5 | D MAX | E MAX | F MAX | K ±0,5 | ØG ±0,076 | ØH +0,02/-0,12 |
|---|---|---|---|---|---|---|---|---|---|---|
| 08 | 7/16-28UNEF | 18,3 | 6,6 | 16,4 | 15,3 | 22,7 | 21,5 | 15,0 | 8,74 | 9,83 |
| 10 | 9/16-24UNEF | 21,5 | 10,1 | 17,2 | 15,8 | 26,2 | 23,0 | 17,0 | 11,99 | 13,08 |
| 12 | 11/16-24UNEF | 24,5 | 12,9 | 17,6 | 16,8 | 29,2 | 24,5 | 18,0 | 14,88 | 15,95 |
| 14 | 13/16-20UNEF | 27,8 | 16,1 | 18,5 | 17,8 | 32,2 | 28,5 | 20,0 | 18,06 | 19,15 |
| 16 | 15/16-20UNEF | 30,8 | 19,3 | 19,2 | 18,3 | 35,7 | 30,0 | 21,5 | 21,23 | 22,33 |
| 18 | 1 1/16-18UNEF | 34,1 | 21,7 | 19,6 | 18,8 | 39,7 | 31,5 | 23,0 | 23,93 | 25,02 |
| 20 | 1 3/16-18UNEF | 37,3 | 24,9 | 20,4 | 19,3 | 42,2 | 33,0 | 25,0 | 27,10 | 28,19 |
| 22 | 1 5/16-18UNEF | 40,5 | 28,1 | 20,8 | 18,7 | 45,2 | 34,5 | 26,0 | 30,28 | 31,37 |
| 24 | 1 7/16-18UNEF | 43,7 | 31,3 | 21,7 | 20,5 | 48,2 | 36,0 | 28,0 | 33,45 | 34,54 |

TABLE 2

| CODE | FINISH |
|---|---|
| C | ELECTROLESS NICKEL |
| B | CADMIUM OLIVE DRAB OVER ELECTROLESS NICKEL |
| ZB | ZINC COBALT OLIVE DRAB OVER ELECTROLESS NICKEL |
| ZN | ZINC NICKEL BLACK PASSIVATE OVER ELECTROLESS NICKEL |

LIST NOT EXHAUSTIVE, SEE PLATING TABLE FOR OTHER OPTIONS

DCF1-16-1-C-L25

- SERIES
- CONNECTOR INTERFACE
- ANGLE
- SHELL SIZE (TABLE 1)
- MATERIAL
  - ALUMINIUM ALLOY
- FINISH (TABLE 2)
- LENGTH CODE IN MM
  - STRAIGHT ONLY

DRAWING NOT TO SCALE, DIMENSIONS IN MM

See pages 18-26 for complete list of available materials, finishes and Connector interfaces
(dimensions, form and O Ring subject to change depending on Backshell material and Connector interface)

THIS DRAWING IS THE PROPERTY OF POLAMCO LTD AND MUST NOT BE USED FOR COMMERCIAL PURPOSES WITHOUT WRITTEN CONSENT OF THE COMPANY

# DCH - Extender / Angle Adaptor

## Interface H - MIL-DTL-38999 SERIES III & IV

Polamco

**Interconnect Solutions Worldwide**

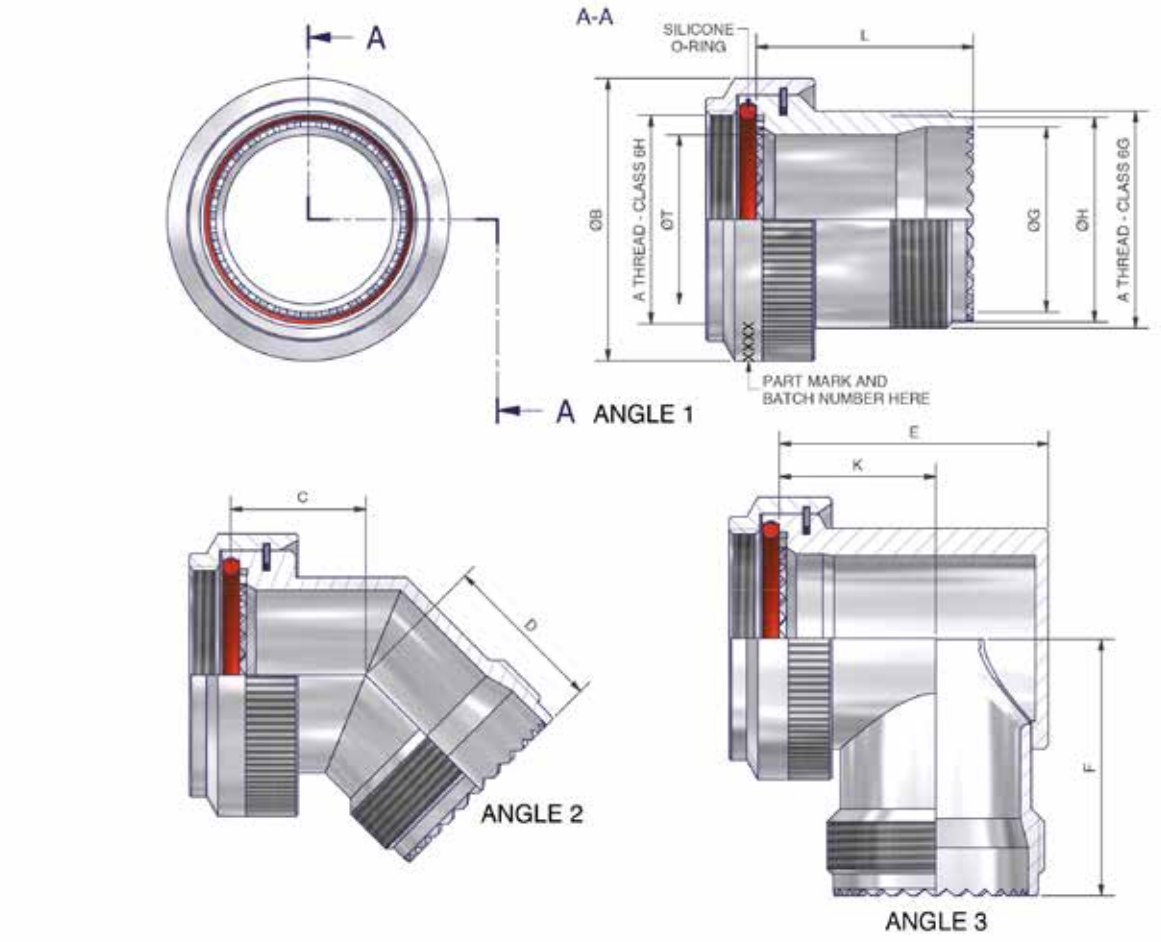


TABLE 1

| SHELL SIZE | A THREAD | ØB MAX | ØT | ØG +0/-0.15 | ØH MAX | L MAX | C MAX | D MAX | E MAX | F MAX | K ± 0,5 |
|---|---|---|---|---|---|---|---|---|---|---|---|
| 09 | M12 x 1.0 | 18,0 | 6,8 | 10,57 | 8,80 | 50 | 12,5 | 15,3 | 20,0 | 21,5 | 15,5 |
| 11 | M15 x 1.0 | 21,0 | 10,3 | 13,56 | 12,07 | 65 | 13,0 | 15,8 | 23,0 | 23,0 | 16,5 |
| 13 | M18 x 1.0 | 24,5 | 13,6 | 16,58 | 14,96 | 80 | 13,6 | 16,8 | 27,0 | 24,5 | 19,0 |
| 15 | M22 x 1.0 | 29,0 | 16,3 | 20,57 | 18,14 | 100 | 14,0 | 17,8 | 28,0 | 28,5 | 18,5 |
| 17 | M25 x 1.0 | 32,5 | 19,5 | 23,57 | 21,31 | 125 | 15,0 | 18,3 | 31,0 | 30,0 | 20,0 |
| 19 | M28 x 1.0 | 35,5 | 21,9 | 26,57 | 24,00 | 125 | 16,0 | 18,8 | 36,0 | 31,5 | 23,0 |
| 21 | M31 x 1.0 | 37,0 | 25,2 | 29,57 | 27,18 | 125 | 16,6 | 19,3 | 39,0 | 33,0 | 24,0 |
| 23 | M34 x 1.0 | 40,0 | 28,3 | 32,56 | 30,35 | 125 | 17,0 | 18,7 | 41,0 | 34,5 | 25,0 |
| 25 | M37 x 1.0 | 43,5 | 31,5 | 35,56 | 33,53 | 125 | 17,4 | 20,5 | 47,0 | 36,0 | 29,5 |

TABLE 2

| CODE | FINISH |
|---|---|
| C | ELECTROLESS NICKEL |
| B | CADMIUM OLIVE DRAB OVER ELECTROLESS NICKEL |
| ZB | ZINC COBALT OLIVE DRAB OVER ELECTROLESS NICKEL |
| ZN | ZINC NICKEL BLACK PASSIVATE OVER ELECTROLESS NICKEL |

LIST NOT EXHAUSTIVE, SEE MATERIAL AND PLATING TABLE FOR FULL LIST

DCH1-17-1-B-L25

- SERIES
- CONNECTOR INTERFACE
- ANGLE
- SHELL SIZE (TABLE 1)
- MATERIAL
  - ALUMINIUM ALLOY
- FINISH (TABLE 2)
- LENGTH CODE IN MM
  - STRAIGHT ONLY

DRAWING NOT TO SCALE, DIMENSIONS IN MM

See pages 18-26 for complete list of available materials, finishes and Connector interfaces
(dimensions, form and O Ring subject to change depending on Backshell material and Connector interface)



THIS DRAWING IS THE PROPERTY OF POLAMCO LTD AND MUST NOT BE USED FOR COMMERCIAL PURPOSES WITHOUT WRITTEN CONSENT OF THE COMPANY

# DCH1-F - Fixed Extender Adaptor

## Interface H - MIL-DTL-38999 SERIES III & IV

Polamco

**Interconnect Solutions Worldwide**

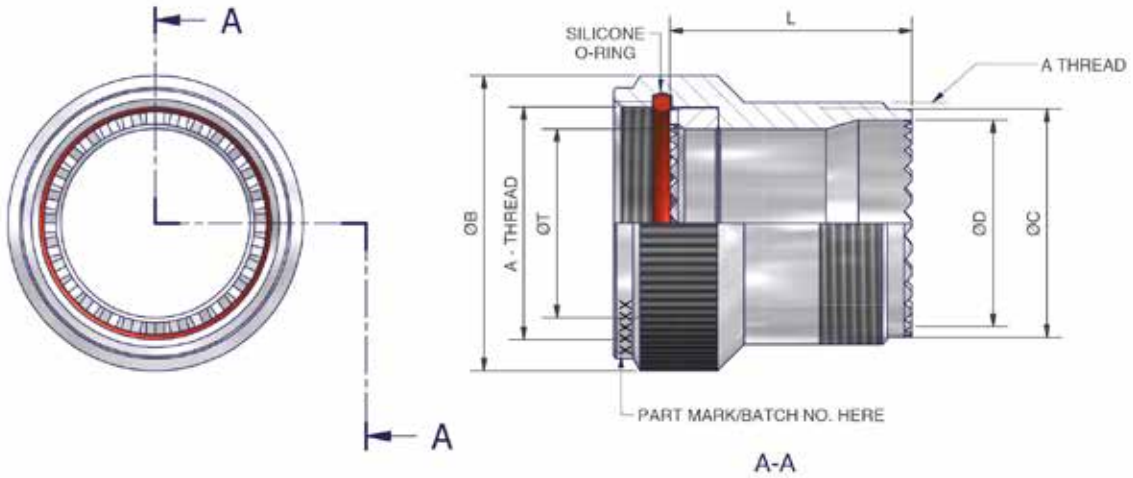


NOTES:
1. LENGTH L -
MINIMUM LENGTH ON ALL SHELL SIZES - 20.0mm
LENGTH INCREMENT OF 5,0mm TO MAXIMUM
LENGTH SHOWN IN TABLE 1

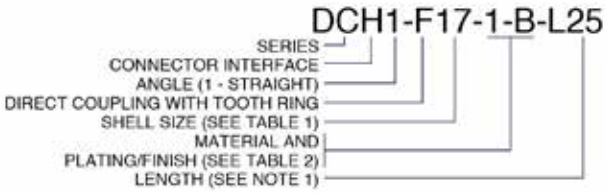


TABLE 1

| SHELL SIZE | A THREAD | B MAX | C +0/-0,15 | D MAX | L MAX | T |
|---|---|---|---|---|---|---|
| 09 | M12 x 1.0 | 17,0 | 10.57 | 8,80 | 50 | 6.8 |
| 11 | M15 x 1.0 | 20,0 | 13.56 | 12.07 | 65 | 10.3 |
| 13 | M18 x 1.0 | 23,0 | 16.58 | 14.96 | 80 | 13.6 |
| 15 | M22 x 1.0 | 27,5 | 20.57 | 18.14 | 100 | 16.3 |
| 17 | M25 x 1.0 | 30,5 | 23.57 | 21.31 | 125 | 19.5 |
| 19 | M28 x 1.0 | 34,0 | 26.57 | 24,00 | 125 | 21.9 |
| 21 | M31 x 1.0 | 36,0 | 29.57 | 27.18 | 125 | 25.2 |
| 23 | M34 x 1.0 | 39,0 | 32.56 | 30.35 | 125 | 28.3 |
| 25 | M37 x 1.0 | 42,0 | 35.56 | 33.53 | 125 | 31.5 |

TABLE 2

| CODE | MATERIAL / PLATING |
|---|---|
| 1-C | ALUMINIUM / ELECTROLESS NICKEL |
| 1-B | ALUMINIUM / CADMIUM OLIVE DRAB OVER ELECTROLESS NICKEL |
| 1-ZB | ALUMINIUM / ZINC COBALT OLIVE DRAB OVER ELECTROLESS NICKEL |
| 1-ZN | ALUMINIUM / ZINC NICKEL BLACK PASSIVATE OVER ELECTROLESS NICKEL |
| 4-J | STAINLESS STEEL / PASSIVATE |
| 2-Z | NICKEL ALUMNIUM BRONZE / SHOT BLAST |

LIST NOT EXHAUSTIVE - FOR COMPREHENSIVE LIST AND SPECS SEE WEBSITE

DRAWING NOT TO SCALE, DIMENSIONS IN MM

See pages 18-26 for complete list of available materials, finishes and Connector interfaces
(dimensions, form and O Ring subject to change depending on Backshell material and Connector interface)

THIS DRAWING IS THE PROPERTY OF POLAMCO LTD AND MUST NOT BE USED FOR COMMERCIAL PURPOSES WITHOUT WRITTEN CONSENT OF THE COMPANY

# Associated Products

## Screen Termination Bands, Screenbraid, Adhesives and Hellermann Tyton® Heat Shrink Boots

### Screen Termination Band

Termination bands for Polamco Banding Backshells

### Screenbraid

EMC/RFI screen braided product supplied on a plastic former in order to ease cable harness assembly.

#### PE90 & PE93

- Minimum 90% or 93% coverage
- Cable diameter range of 2mm to 60mm
- Tin and nickel-plated copper

#### PBS90 & PBS95

- Minimum 90% or 95% coverage
- Cable diameter range of 2mm to 60mm
- Stainless Steel

### Adhesives

A flexible, two-part, room temperature curing adhesive with shear and peel strengths. Although excellent for bonding a wide variety of substrates, the adhesive has been specifically designed for use in the manufacturing of high performance, cable harness assemblies. The adhesive is available in:

- 50ml duo-syringes, part no. POL125-DS050
- Conductive adhesive, part no. POL183-DS050

### Heat Shrink Boots

Hellermann Tyton® Heat Shrink boots are available for the complete range of electrical and electronic harnessing applications.

- Easy installation
- High dielectric strength
- Mechanical toughness
- Superior chemical and environmental resistance
- Up to 5:1 shrink ratio
- Made from Polyolefin and Viton
- Temperature range: -55 degrees to +200 degrees
- Adhesives: WM250 +80°C. W8 +105°C, W24 +200°C

# Screen Termination Band

Polamco

## Interconnect Solutions Worldwide

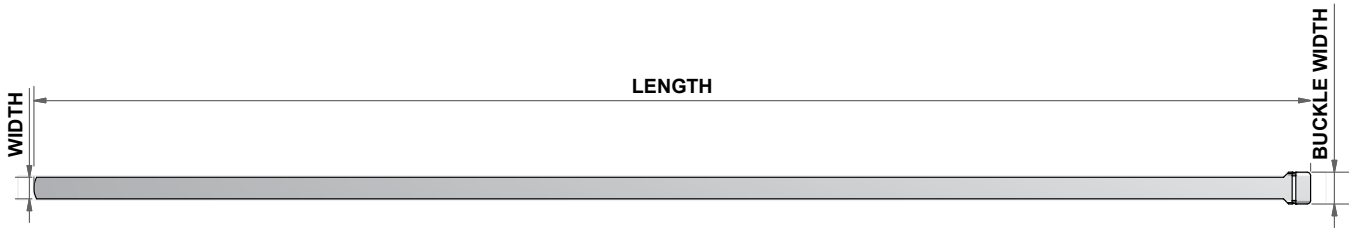

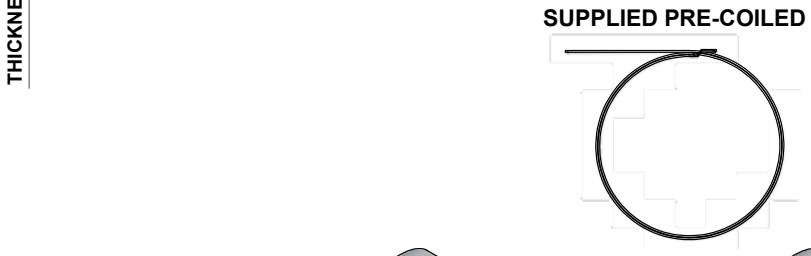


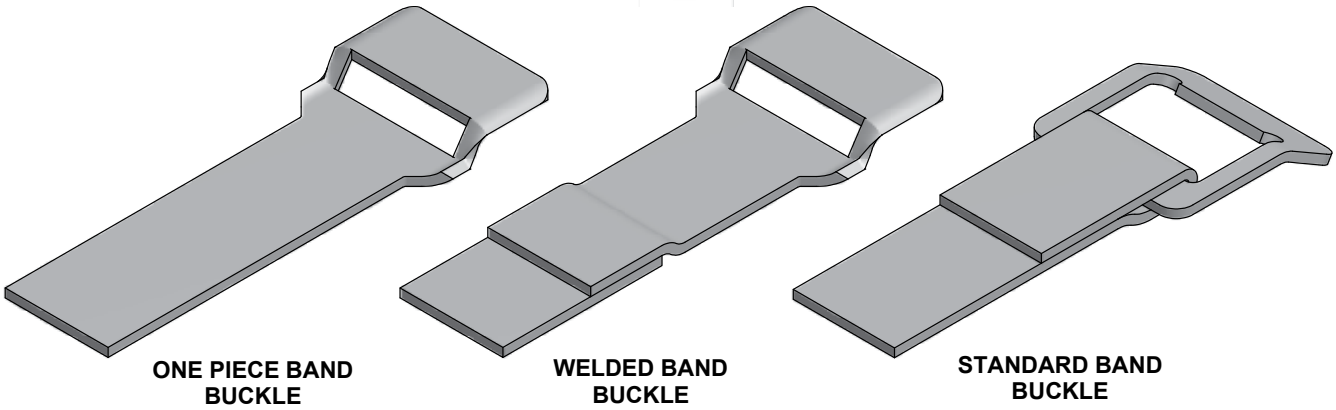


| PART NUMBER | DESCRIPTION | BUCKLE STYLE | SUPPLY CONDITION | WIDTH | LENGTH | THICKNESS | BUCKLE WIDTH | MATERIAL |
|---|---|---|---|---|---|---|---|---|
| AXCL05 | STANDARD BAND | STANDARD | PRE-COILED | 5,9 | 325 | 0,50 | 9,0 | 316L |
| AE1009 | WELDED BAND | WELDED | FLAT | 6,1 | 377 | 0,51 | 9,0 | 304 |
| A10089 | ONE PIECE BAND | ONE PIECE | FLAT | 6,1 | 362 | 0,51 | 9,0 | 304 |
| A10088 | PRE-COILED ONE PIECE BAND | ONE PIECE | PRE-COILED | 6,1 | 362 | 0,51 | 9,0 | 304 |
| A11089 | LONG BAND | ONE PIECE | FLAT | 6,1 | 457 | 0,51 | 9,0 | 304 |
| AXCL03 | MICROBAND | STANDARD | PRE-COILED | 3,0 | 200 | 0,35 | 5,2 | 316L |
| A31189 | ONE PIECE MICROBAND | ONE PIECE | FLAT | 3,0 | 207 | 0,38 | 5,2 | 304 |
| A31188 | PRE-COILED ONE PIECE MICROBAND | ONE PIECE | PRE-COILED | 3,0 | 207 | 0,38 | 5,2 | 304 |
| A31089 | LONG MICROBAND | ONE PIECE | FLAT | 3,0 | 362 | 0,38 | 5,2 | 304 |

DRAWING NOT TO SCALE, DIMENSIONS IN MM

THIS DRAWING IS THE PROPERTY OF POLAMCO LTD AND MUST NOT BE USED FOR COMMERCIAL PURPOSES WITHOUT WRITTEN CONSENT OF THE COMPANY

# Screenbraid

## PE90 & PE93 - Tinned Copper & Nickel Plated Copper

Polamco

**Interconnect Solutions Worldwide**

Screenbraid is an electrical EMC/RFI screen braided product which is supplied on a plastic former in order to ease cable harness assembly. The wire bundle is threaded through the tube and then withdrawn to leave the Screenbraid neatly over the wire bundles. Screenbraid can then be terminated to the connector by using a Polamco shielded adaptor in typical use.

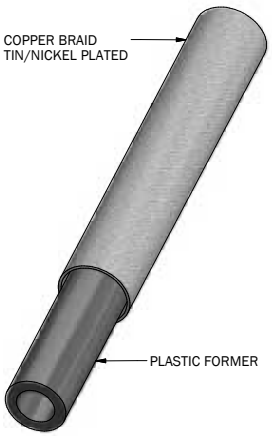


**PE90**

This has a minimum 90% coverage and covers a cable diameter range of 2mm to 40mm.

Both products are offered in tin-plated copper as well as nickel-plated copper for high temperature applications.

**PE93**

This has a minimum 93% coverage and is more flexible than the Screenbraid 90 and also has a higher expansion ratio. It covers a cable diameter range of 2mm to 60mm.

| EXAMPLE PART NUMBERING PE93-10.0-T-D | |
|---|---|
| PE = | SERIES |
| 93 = | MIN COVERAGE |
| 10.0 = | SIZE |
| T = | (N-NICKEL PLATED COPPER WIRE TO BS4109 AND ASTMB355) (T-TINNED PLATED COPPER WIRE TP BS4109) |
| D = | DOUBLE BRAID OPTION (OMIT FOR SINGLE BRAID) |

| PART NUMBER | DIAMETER OF FORMER (mm) | NO. OF CARRIERS | NO. OF ENDS PER CARRIER | INDIVIDUAL STRAND SIZE AWG/(MM) | MIN COVERAGE % | CABLE BUNDLE TOLERANCE (MIN-MAX) | APPROX. MASS EXC FORMER (KG/KM) |
|---|---|---|---|---|---|---|---|
| PE90-3,0-* | 3,0 | 16 | 5 | 36 / 0,13 | 90 | 2.0 - 3.5 | 10,0 |
| PE90-4,0-* | 4,0 | 16 | 7 | 36 / 0,13 | 90 | 3.0 - 5.0 | 14,5 |
| PE90-5,0-* | 5,0 | 24 | 6 | 36 / 0,13 | 90 | 4.0 - 6.0 | 19,0 |
| PE90-6,0-* | 6,0 | 24 | 7 | 36 / 0,13 | 90 | 5.0 - 8.0 | 22,0 |
| PE90 10,0-* | 10,0 | 24 | 9 | 34 / 0,16 | 90 | 7.0 - 12.0 | 44,0 |
| PE90-12,5-* | 12,5 | 24 | 10 | 34 / 0,16 | 90 | 11.0 - 14.0 | 48,0 |
| PE90-15,0-* | 15,0 | 24 | 11 | 32 / 0,20 | 90 | 13.0 - 18.0 | 83,0 |
| PE90-20,0-* | 20,0 | 48 | 11 | 36 / 0,13 | 90 | 17.0 - 23.0 | 100,0 |
| PE90-25,0-* | 25,0 | 36 | 9 | 30 / 0,25 | 90 | 22.0 - 28.0 | 112,5 |
| PE90-30,0-* | 30,0 | 36 | 9 | 28 / 0,31 | 90 | 27.0 - 40.0 | 193,0 |
| PE93-2,0-* | 2,0 | 16 | 10 | 38/0.10 | 93 | 2.0 - 3.0 | 10 |
| PE93-3,0-* | 3,0 | 16 | 10 | 38 / 0,10 | 93 | 2.5 - 5.0 | 12,5 |
| PE93-4,0-* | 4,0 | 24 | 7 | 36 / 0,13 | 93 | 3.7 - 9.0 | 22,0 |
| PE93-6,0-* | 6,0 | 24 | 9 | 36 / 0,13 | 93 | 4.6 - 13.5 | 28,0 |
| PE93-7,5-* | 7,5 | 24 | 14 | 36 / 0,13 | 93 | 7.5 - 16.0 | 44,0 |
| PE93-10,0-* | 10,0 | 48 | 8 | 36 / 0,13 | 93 | 9.0 - 22.5 | 50,0 |
| PE93-12,5-* | 12,5 | 48 | 11 | 36 / 0,13 | 93 | 11.0 - 24.0 | 75,0 |
| PE93-15,0-* | 15,0 | 48 | 11 | 36 / 0,13 | 93 | 10.0 - 25.0 | 75,0 |
| PE93-20,0-* | 20,0 | 48 | 16 | 36 / 0,13 | 93 | 17.0 - 32.0 | 100,0 |
| PE93-25,0-* | 25,0 | 48 | 18 | 36 / 0,13 | 93 | 15.0 - 40.0 | 112,5 |
| PE93-30,0-* | 30,0 | 48 | 20 | 36 / 0,16 | 93 | 30.0 - 60.0 | 193,0 |

SUPPLIED IN 50m APPROX. MULTIPLES - PRICE AND DELIVERY AVAILABLE ON REQUEST

DRAWING NOT TO SCALE, DIMENSIONS IN MM

See pages 18-26 for complete list of available materials, finishes and Connector interfaces
(dimensions, form and O Ring subject to change depending on Backshell material and Connector interface)



THIS DRAWING IS THE PROPERTY OF POLAMCO LTD AND MUST NOT BE USED FOR COMMERCIAL PURPOSES WITHOUT WRITTEN CONSENT OF THE COMPANY

# Screenbraid

## PBS90 & PBS95 - Stainless Steel

Polamco

**Interconnect Solutions Worldwide**

PBS90 and PBS95 and Stainless Steel versions of Polamco Screenbraid. These Screenbraids have excellent corrosion resisting characteristics and can be used for high temperature applications.

**PBS90**

This has a minimum 90% coverage and covers a cable diameter range of 2mm to 23mm.

**PBS95**

This has a minimum 95% coverage and is more flexible than the Screenbraid 90 and also has a higher expansion ratio. It covers a cable diameter range of 2.5 mm to 60mm.

| EXAMPLE PART NUMBERING PBS90-3.0-S | |
|---|---|
| PBS = | SERIES |
| 90 = | MIN COVERAGE |
| 3.0 = | SIZE |
| S = | STAINLESS STEEL |

| PART NUMBER | DIAMETER OF FORMER (mm) | TOTAL NO. OF WIRES | INDIVIDUAL STRAND SIZE (mm) | MIN COVERAGE % | CABLE BUNDLE TOLERANCE (MIN-MAX) |
|---|---|---|---|---|---|
| PBS90-3.0-S | 3 | 64 | 0.15 | 90 | 2.0 - 3.5 |
| PBS90-6.0-S | 6 | 168 | 0.122 | 90 | 5.0 - 7.0 |
| PBS90-10.0-S | 10 | 256 | 0.122 | 90 | 7.0 - 12.0 |
| PBS90-12.5-S | 12.5 | 384 | 0.122 | 90 | 11.0 - 13.0 |
| PBS90-20.0-S | 20 | 528 | 0.122 | 90 | 17.0 - 23.0 |
| PBS95-3.0-S | 3 | 96 | 0.15 | 95 | 2.5 - 5.0 |
| PBS95-4.0-S | 4 | 168 | 0.122 | 95 | 3.5 - 7.5 |
| PBS95-6.0-S | 6 | 168 | 0.15 | 95 | 4.5 - 9.5 |
| PBS95-7.5-S | 7.5 | 264 | 0.15 | 95 | 7.0 - 14.0 |
| PBS95-10-S | 10 | 336 | 0.15 | 95 | 8.0 - 22.0 |
| PBS95-12.5-S | 12.5 | 384 | 0.15 | 95 | 11.0 - 24.0 |
| PBS95-15.0-S | 15 | 528 | 0.15 | 95 | 13.0 - 18.0 |
| PBS95-20.0-S | 20 | 672 | 0.15 | 95 | 16.0 - 38.0 |
| PBS95-25.0-S | 25 | 672 | 0.15 | 95 | 22.0 - 38.0 |
| PBS95-30.0-S | 30 | 960 | 0.15 | 95 | 27.0 - 40.0 |
| PBS95-40.0-S | 40 | 960 | 0.15 | 95 | 35.0 - 60.0 |

DRAWING NOT TO SCALE, DIMENSIONS IN MM

See pages 18-26 for complete list of available materials, finishes and Connector interfaces
(dimensions, form and O Ring subject to change depending on Backshell material and Connector interface)

THIS DRAWING IS THE PROPERTY OF POLAMCO LTD AND MUST NOT BE USED FOR COMMERCIAL PURPOSES WITHOUT WRITTEN CONSENT OF THE COMPANY

### POL125 - FLEXIBLE HIGH PERFROMANCE EPOXY ADHESIVE

A flexible, two-part, room temperature curing adhesive with shear and peel strengths. Although excellent for bonding a wide variety of substrates, POL125 has been specifically designed for use in the manufacturing of high performance, cable harness assemblies.

- Excellent flexibility giving high shear and peel strengths
- Outstanding chemical and fluid resistance
- Operates up to 150°C
- Bonds metals, glass, wood, rubbers and many plastics
- Supplied in DuoSyringe for easy application
- Standard size is 50ml

| POL125 TYPICAL CURING PROPERTIES | |
|---|---|
| Work life at 23°C | 90 minutes |
| Time to handling at 23°C | 24 hours |
| Time to full cure at 23°C | 7 days |
| Time to full cure at 85°C | 2 hours |

| POL125 TYPICAL PERFORMANCE (Measurements at 23°C) | |
|---|---|
| Lap Shear (Al/ Al) | 20MPa |
| Peel Strength (XLPE/XLPE) | 370 N/ 25mm |
| Peel Strength after Thermal Shock (4hrs@215°C) | 370 N/ 25mm |
| Dynamic Shear (Backshell/boot/cable. Shell size 22) | 520 N |
| Operating temperature range | -75°C to 150°C |

### POL183 - ELECTRICALLY CONDUCTIVE EPOXY ADHESIVE

POL183 is specifically designed for shield and connector termination in EMC applications.

- Easy to use medium viscosity adhesive
- Room temperature or elevated temperature cure
- Easy to apply using the DuoSyringe system
- Standard size is 25ml (50g), with associated mixing nozzles and dispenser guns

| POL183 TYPICAL CURING PROPERTIES | |
|---|---|
| Work life at 23°C | 60 minutes |
| Time to handling at 23°C | 8 hours |
| Cure time at 23°C | 24 hours |
| Cure time at 80°C | 1 hour |
| Cure time at 100°C | 30 minutes |

| POL183 TYPICAL PERFORMANCE (cured for 30 minutes at 100°C) | |
|---|---|
| Lap Shear (Al / Al @ 23°C) | 8 MPa |
| Resistivity (@ 23°C) | <0.01 ohm-cm |
| Lap Shear (Al / Al, after 172hrs @ 150°C) | 8 MPa |
| Resistivity (after 172hrs @ 150°C) | <0.01 ohm-cm |
| Lap Shear (Al / Al, after 172hrs @ 40°C in water) | 6 MPa |
| Resistivity (after 172hrs @ 40°C in water) | <0.01 ohm-cm |
| Operating temperature range | -55°C to 150°C |

DRAWING NOT TO SCALE, DIMENSIONS IN MM

See pages 18-26 for complete list of available materials, finishes and Connector interfaces
(dimensions, form and O Ring subject to change depending on Backshell material and Connector interface)



THIS DRAWING IS THE PROPERTY OF POLAMCO LTD AND MUST NOT BE USED FOR COMMERCIAL PURPOSES WITHOUT WRITTEN CONSENT OF THE COMPANY

### HOW TO ORDER

| | POL125 | POL183 |
|---|---|---|
| DuoSyringe | POL125-DS050 | POL183-DS050 |
| Applicator Gun | POL125-AG | POL125-AG |
| Mixing Nozzle (10pcs) | POL125-MN | POL125-MN |

DRAWING NOT TO SCALE, DIMENSIONS IN MM

See pages 18-26 for complete list of available materials, finishes and Connector interfaces
(dimensions, form and O Ring subject to change depending on Backshell material and Connector interface)

THIS DRAWING IS THE PROPERTY OF POLAMCO LTD AND MUST NOT BE USED FOR COMMERCIAL PURPOSES WITHOUT WRITTEN CONSENT OF THE COMPANY

# 150 Series

## Heat Shrink Boots - Straight with Rib-VG Style

Polamco

**Interconnect Solutions Worldwide**

THIS STYLE IS USED IN CONJUNCTION WITH A CIRCULAR GROOVED BACKSHELL, PROVIDING STRAIN RELIEF AND ENVIROMENTAL SEALING.

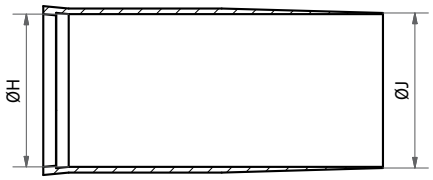


EXPANDED FORM (AS SUPPLIED)

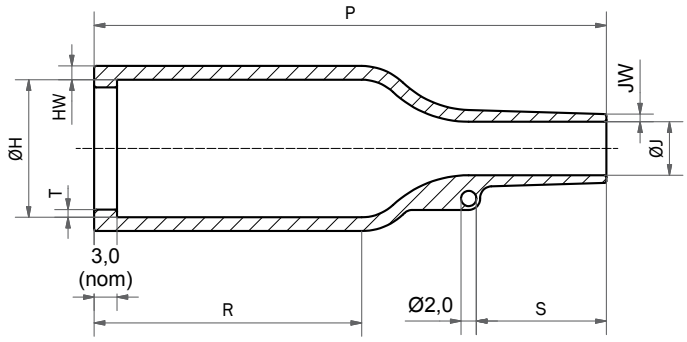


FULLY RECOVERED FORM (AFTER HEATING)

HEATSHRINK BOOT SELECTION TABLE

| HEATSHRINK BOOT SHAPE | FITS ENTRY SIZES | RECOMMENDED ENTRY SIZES | MINIMUM CABLE JACKET DIAMETER | MAXIMUM CABLE JACKET DIAMETER | RECOVERED BOOT LENGTH +/-10% | COMMENTS |
|---|---|---|---|---|---|---|
| 120-41 | 03-05 | 03-04 | 3,0 | 10,7 | 38,0 | |
| 152-42 | 03-10 | 05 | 6,0 | 24,0 | 38,0 | IDEAL WHEN 154-42 IS TOO LONG |
| 153-42 | 03-10 | 05-10 | 3,5 | 9,0 | 55,0 | IDEAL WHEN CABLE JACKET DIAMETER IS MUCH SMALLER THAN THE ADAPTOR ENTRY SIZE |
| 154-42 | 03-14 | 05-06 | 6,0 | 30,0 | 55,0 | |
| 155-42 | 07-14 | 07-09 | 7,0 | 31,0 | 67,0 | |
| 156-42 | 10-17 | 10-12 | 8,5 | 36,0 | 80,0 | |
| 157-43 | 13-22 | 13-17 | 10,0 | 43,0 | 99,0 | |
| 158-43 | 18-24 | 18-24 | 16,0 | 60,0 | 130,0 | |

DIMENSIONS APPLY TO ALL MATERIALS UNLESS OTHERWISE INDICATED AND ARE IN MM

| | | EXPANDED (MIN) | | | | RECOVERED (MAX) | | RECOVERED DIMENSIONS FULLY SHRUNK | | | | | |
|---|---|---|---|---|---|---|---|---|---|---|---|---|---|
| VG PART NO. | HELLERMANN PART NO. | H | H -H MATL | J | J-H MATL | H | J | P ±10% | R ±10% | S NOM | T ±20% | HW ±20% | JW ±20% |
| VG 95343 T 06 B 001 A | *152-42 | 24,0 | 24,0 | 24,0 | 24,0 | 10,5 | 6,0 | 38,0 | 21,0 | 10,0 | 1,0 | 1,6 | 0,5 |
| VG 95343 T 06 B 002 A | *153-42 | 25,0 | 25,0 | 9,0 | 9,0 | 14,0 | 3,5 | 55,0 | 28,0 | 16,0 | 1,0 | 1,8 | 0,5 |
| VG 95343 T 06 B 003 A | *154-42 | 30,0 | 30,0 | 30,0 | 30,0 | 14,0 | 6,0 | 55,0 | 32,0 | 13,0 | 1,0 | 1,8 | 1,0 |
| VG 95343 T 06 B 004 A | *155-42 | 31,0 | 31,0 | 31,0 | 31,0 | 18,0 | 7,0 | 67,0 | 35,0 | 18,0 | 1,0 | 1,8 | 1,0 |
| VG 95343 T 06 B 005 A | *156-42 | 36,0 | 36,0 | 36,0 | 36,0 | 22,5 | 8,5 | 80,0 | 42,0 | 20,0 | 1,0 | 2,0 | 1,0 |
| VG 95343 T 06 C 001 A | *157-43 | 43,0 | 43,0 | 43,0 | 43,0 | 28,0 | 10,0 | 99,0 | 61,0 | 20,0 | 1,7 | 2,2 | 1,0 |
| VG 95343 T 06 C 002 A | *158-43 | 60,0 | 60,0 | 60,0 | 60,0 | 35,0 | 16,0 | 130,0 | 72,0 | 38,0 | 1,7 | 3,2 | 1,5 |
| VG 95343 T 06 C 003 A | *159-43 | 66,0 | 66,0 | 51,0 | 51,0 | 45,0 | 17,0 | 171,0 | 90,0 | 50,0 | 2,0 | 3,8 | 2,0 |
| VG 95343 T 06 C 004 A | 160-43 | 82,0 | 81,0 | 82,0 | 81,0 | 58,0 | 27,0 | 213,0 | 113,0 | 62,0 | 2,0 | 3,8 | 3,8 |
| NON-STANDARD PRODUCTS WITH REDUCED OVERALL LENGTHS | | | | | | | | | | | | | |
| VG 95343 T 06 A 001 A | 152-41 | 24,0 | 24,0 | 24,0 | 24,0 | 10,5 | 6,0 | 26,0 | 9,0 | 10,0 | 1,0 | 1,6 | 0,5 |
| VG 95343 T 06 A 002 A | 153-41 | 25,0 | 25,0 | 9,0 | 9,0 | 14,0 | 3,5 | 40,0 | 13,0 | 16,0 | 1,0 | 1,8 | 0,5 |
| VG 95343 T 06 A 003 A | 154-41 | 30,0 | 30,0 | 30,0 | 30,0 | 14,0 | 6,0 | 43,0 | 20,0 | 13,0 | 1,0 | 1,8 | 1,0 |
| VG 95343 T 06 A 004 A | 155-41 | 31,0 | 31,0 | 31,0 | 31,0 | 18,0 | 7,0 | 47,0 | 15,0 | 18,0 | 1,0 | 1,8 | 1,0 |
| VG 95343 T 06 A 005 A | 156-41 | 36,0 | 36,0 | 36,0 | 36,0 | 22,5 | 8,5 | 60,0 | 22,0 | 20,0 | 1,0 | 2,0 | 1,0 |
| VG 95343 T 06 A 006 A | 157-41 | 43,0 | 43,0 | 43,0 | 43,0 | 28,0 | 10,0 | 60,0 | 21,0 | 20,0 | 1,7 | 2,2 | 1,0 |
| VG 95343 T 06 B 006 A | 157-42 | 43,0 | 43,0 | 43,0 | 43,0 | 28,0 | 10,0 | 79,0 | 41,0 | 20,0 | 1,7 | 2,2 | 1,0 |
| VG 95343 T 06 A 007 A | 158-41 | 60,0 | 60,0 | 60,0 | 60,0 | 35,0 | 16,0 | 90,0 | 32,0 | 38,0 | 1,7 | 3,2 | 1,5 |
| VG 95343 T 06 B 007 A | 158-42 | 60,0 | 60,0 | 60,0 | 60,0 | 35,0 | 16,0 | 111,0 | 52,0 | 38,0 | 1,7 | 3,2 | 1,5 |
| VG 95343 T 06 A 008 A | 159-41 | 66,0 | 66,0 | 66,0 | 51,0 | 45,0 | 17,0 | 130,0 | 50,0 | 50,0 | 2,0 | 3,8 | 2,0 |
| VG 95343 T 06 B 008 A | 159-42 | 66,0 | 66,0 | 51,0 | 51,0 | 45,0 | 17,0 | 150,0 | 70,0 | 50,0 | 2,0 | 3,8 | 2,0 |
| VG 95343 T 06 A 009 A | 160-41 | 82,0 | 81,0 | 82,0 | 81,0 | 58,0 | 27,0 | 137,0 | 37,0 | 62,0 | 2,0 | 3,8 | 3,8 |
| VG 95343 T 06 B 009 A | 160-42 | 82,0 | 81,0 | 82,0 | 81,0 | 58,0 | 27,0 | 158,0 | 58,0 | 62,0 | 2,0 | 3,8 | 3,8 |

| ADHESIVE COATING OPTIONS | | |
|---|---|---|
| REFERENCE | DEF-STAN REF | DESCRIPTION |
| WM250 | WL | GENERAL PURPOSE HOT MELT +80°C |
| W8 | WH | HIGH PERFORMANCE HOT MELT +105°C |
| W24 | U | HIGH PERFORMANCE PRE-COAT EPOXY +200°C |

| MATERIALS AVAILABLE | | | |
|---|---|---|---|
| REFERENCE | | DEF-STAN REF | DESCRIPTION |
| B7 | * | DA | SEMI-RIGID FLAME RETARDED POLYOLEFIN |
| G | * | DE | FLUID RESISTANT ELASTOMER |
| J | | DB | FLEXIBLE POLYOLEFIN |
| H | * | DF | FLEXIBLE LIMITED FIRE HAZARD MATERIAL |

*STANDARD PRODUCTS AND MATERIALS

DRAWING NOT TO SCALE, DIMENSIONS IN MM

See pages 18-26 for complete list of available materials, finishes and Connector interfaces
(dimensions, form and O Ring subject to change depending on Backshell material and Connector interface)



THIS DRAWING IS THE PROPERTY OF POLAMCO LTD AND MUST NOT BE USED FOR COMMERCIAL PURPOSES WITHOUT WRITTEN CONSENT OF THE COMPANY

# 1100 Series

## Heat Shrink Boots - Right-Angle with Rib-VG Style

Polamco

**Interconnect Solutions Worldwide**

THIS STYLE IS USED IN CONJUNCTION WITH A CIRCULAR GROOVED BACKSHELL, PROVIDING STRAIN RELIEF AND ENVIROMENTAL SEALING.

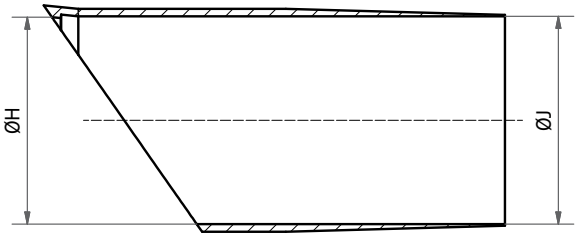


EXPANDED FORM (AS SUPPLIED)

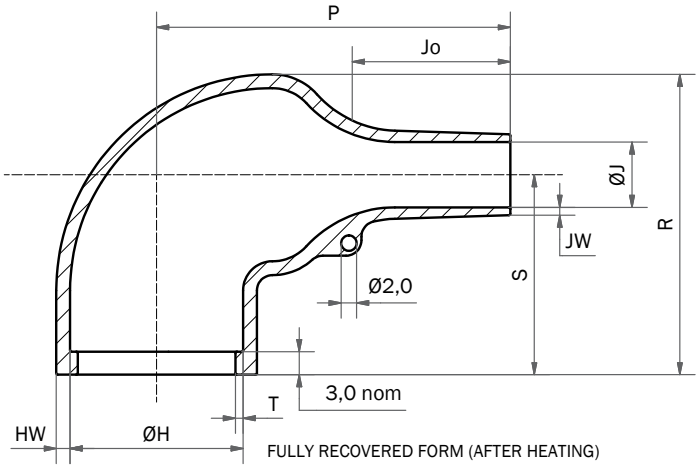


FULLY RECOVERED FORM (AFTER HEATING)

HEATSHRINK BOOT SELECTION TABLE

| HEATSHRINK BOOT SHAPE | FITS ENTRY SIZES | RECOMMENDED ENTRY SIZES | MINIMUM CABLE JACKET DIAMETER | MAXIMUM CABLE JACKET DIAMETER |
|---|---|---|---|---|
| 1152-4 | 03-10 | 05 | 6,0 | 24,0 |
| 1154-4 | 03-14 | 06 | 6,0 | 30,0 |
| 1155-4 | 07-14 | 07-09 | 7,0 | 31,0 |
| 1156-4 | 10-17 | 10-12 | 8,5 | 36,0 |
| 1157-4 | 13-22 | 13-17 | 10,0 | 43,0 |
| 1158-4 | 18-24 | 18-24 | 16,0 | 60,0 |

| DIMENSIONS IN MM | | EXPANDED (MIN) | | RECOVERED (MAX) | | RECOVERED DIMENSIONS FULLY SHRUNK | | | | | | | |
|---|---|---|---|---|---|---|---|---|---|---|---|---|---|
| VG PART NO. | HELLERMANN PART NO. | H | J | H | J | P ±10% | R ±10% | S ±10% | Jo ±10% | HW ±20% | JW ±20% | T ±10% | |
| VG95343 T 06E001 A | * 1152-4 | 24.0 | 24.0 | 10.5 | 6.0 | 26.0 | 25.0 | 19.0 | 10.0 | 1.3 | 0.5 | 1.0 | ** |
| VG95343 T 06E002 A | * 1154-4 | 30.0 | 30.0 | 15.5 | 6.0 | 32.0 | 27.0 | 20.0 | 12.0 | 1.5 | 0.8 | 1.0 | ** |
| VG95343 T 06E003 A | * 1155-4 | 31.0 | 31.0 | 18.0 | 7.0 | 40.0 | 31.0 | 21.0 | 15.0 | 1.8 | 1.0 | 1.0 | ** |
| VG95343 T 06E004 A | * 1156-4 | 36.0 | 36.0 | 22.5 | 8.5 | 46.0 | 38.0 | 26.0 | 15.0 | 1.8 | 1.0 | 1.0 | ** |
| VG95343 T 06E005 A | * 1157-4 | 43.0 | 43.0 | 28.5 | 10.0 | 55.0 | 45.0 | 30.0 | 16.0 | 2.0 | 1.0 | 1.7 | |
| VG95343 T 06E006 A | * 1158-4 | 60.0 | 60.0 | 35.0 | 16.0 | 80.0 | 54.0 | 35.0 | 30.0 | 3.3 | 1.5 | 1.7 | |
| VG95343 T 06E007 A | * 1159-4 | 66.0 | 66.0 | 45.0 | 17.0 | 108.0 | 68.0 | 42.0 | 51.0 | 3.8 | 2.0 | 2.0 | |
| VG95343 T 06E008 A | 1160-4 | 82.0 | 82.0 | 61.0 | 25.0 | 118.0 | 84.0 | 52.0 | 39.0 | 4.0 | 4.0 | 2.0 | |

DIMENSIONS APPLY TO ALL MATERIALS UNLESS OTHERWISE INDICATED AND ARE IN MM

** NOT RECOMMENDED WITH BT OR 91 SERIES

| MATERIALS AVAILABLE | | | |
|---|---|---|---|
| REFERENCE | | DEF-STAN REF | DESCRIPTION |
| B7 | * | DA | SEMI-RIGID FLAME RETARDED POLYOLEFIN |
| G | * | DE | FLUID RESISTANT ELASTOMER |
| J | | DB | FLEXIBLE POLYOLEFIN |
| H | * | DF | FLEXIBLE LIMITED FIRE HAZARD MATERIAL |

*STANDARD PRODUCTS AND MATERIALS

| ADHESIVE COATING OPTIONS | | |
|---|---|---|
| REFERENCE | DEF-STAN REF | DESCRIPTION |
| WM250 | WL | GENERAL PURPOSE HOT MELT +80°C |
| W8 | WH | HIGH PERFORMANCE HOT MELT +105°C |
| W24 | U | HIGH PERFORMANCE PRE-COAT EPOXY +200°C |

DRAWING NOT TO SCALE, DIMENSIONS IN MM

See pages 18-26 for complete list of available materials, finishes and Connector interfaces
(dimensions, form and O Ring subject to change depending on Backshell material and Connector interface)

THIS DRAWING IS THE PROPERTY OF POLAMCO LTD AND MUST NOT BE USED FOR COMMERCIAL PURPOSES WITHOUT WRITTEN CONSENT OF THE COMPANY

Polamco

Interconnect Solutions Worldwide

## BAND

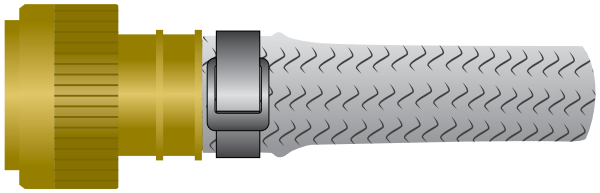

BAND CLAMPED WITH CALIBRATED TOOL

## SPRING

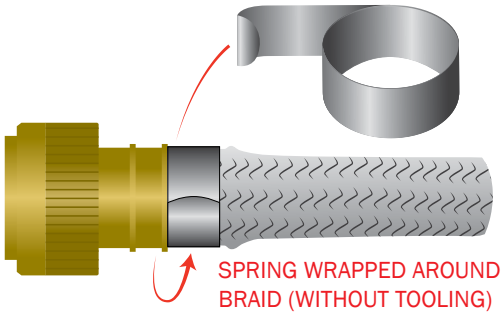

SPRING WRAPPED AROUND BRAID (WITHOUT TOOLING)

## MEMORY RING

MEMORY RING SHRUNK BY APPLICATION OF HEAT

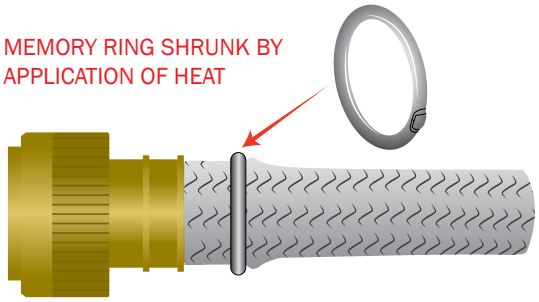

## BRAID TRAP

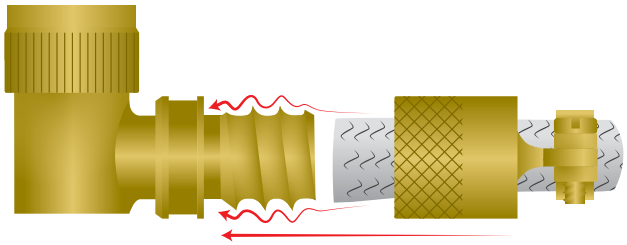

BRAID TRAPPED IN LOOSE FITTING THREAD

## BRAID TAIL

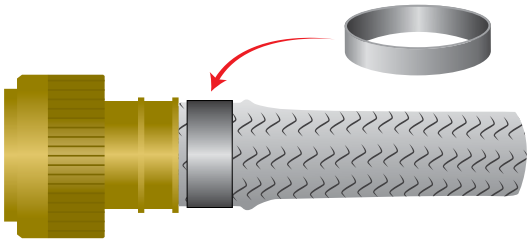

PRODUCT SUPPLIED WITH PRE-TERMINATED BRAID TAIL

## MESH TAPE

BACKSHELL WRAPS MESH TAPE AROUND INDIVIDUAL SCREENS TO ELIMINATE EMC WINDOWS

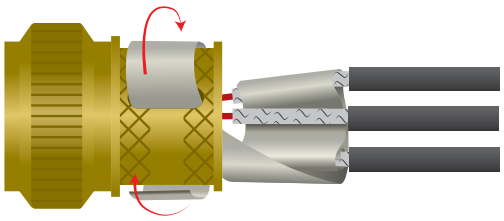

## CONE

BRAID / PIGTAILS CLAMPED BETWEEN CONES

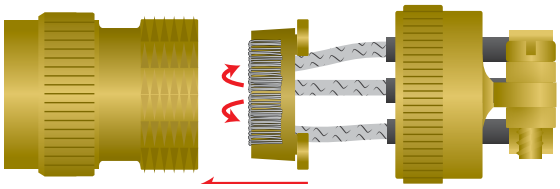

## TAK

BACKSHELL WITH PRE-INSTALLED HEAT SHRINK BOOT. INSTALLED ON CABLE WITH HEAT GUN

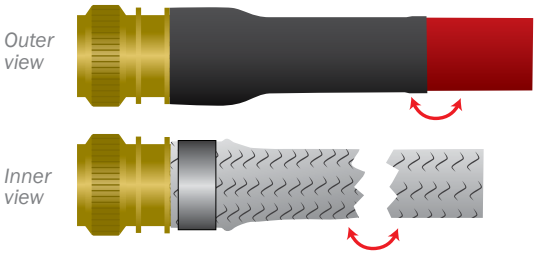

**Adhesives**
Specially-designed adhesives for strain-relief and environmental sealing or screen termination.

**Anti-decoupling**
**(Also known as Self Locking)**
Anti-decoupling backshells incorporate a ratchet in the nut to reduce the possibility of the backshell decoupling from the connector due to extreme vibration and shock.

**Arctic grip**
A deep square-form grip, alternative to a knurled grip, particularly on protective covers.

**Backshell**
Any accessory fitted to the rear thread of a connector, providing strain relief, screen termination and/or cable sealing.

**Blanking Cover**
Provides environmental protection and EMC shielding to circuitry or shorting loops at the rear of a connector that is to be used as a stand-alone device.

**Cobra Head**
Low profile split 90° adaptor.

**Conduit**
Flexible corrugated tubing that provides environmental protection for wiring. Can be used in conjunction with screenbraid and Polamco conduit adaptor backshells to provide a fully screened and sealed system

**Connector**
Device for electrically connecting wires to each other or to electrical equipment.

**D38999**
Refers to military connector standard MIL-DTL-38999 series III.

**Direct-coupling**
Direct-coupling backshells do not have a distinct nut, i.e. the entire backshell rotates when the backshell is screwed into place.

**Dummy Receptacle**
Provides stowage, environmental protection, and EMC shielding for an unmated plug.

**EMC**
Electromagnetic Compatibility assures the avoidance of interference effects resulting from the unintentional generation, propagation and reception of electromagnetic energy. This can be achieved by properly grounded shielding (screening) or by electronically filtering signals (Filter Connector).

**Entry size**
Two digits describe the diameter of the hole through which the cable enters into the backshell. Check the series datasheet for details – note that some series such as boot adaptors ('97' series) and cable clamps ('96' series) do not require the entry size to be stated.

**Follower**
Refers to the main body of a spin-coupling backshell.

**Grommet**
Can refer to the connector grommet, which is a piece of rubber on the rear of the connector, which provides a seal around each individual wire. Polamco D38999 spin-coupling backshells provide an internal chamfer to compress the connector grommet and thus improve the seal.

Or can refer to a cable sealing grommet, which features in 35, 36, 37 & 39 series, which seals on the cable jacket offering excellent immersion capability.

**Heat shrink boot**
Moulded sleeve that joins the cable jacket to a suitable backshell, for purposes of strain-relief and environmental protection. Heat-shrink boots shrink to fit and are installed by use of a specialised hot air gun. Adhesive-lined boots and a variety of materials are available.

**Heat shrink kit**
Backshell with pre-installed heat-shrink boot and optional (internal) overall screen. Enables easy installation whereby boot and 360° screen termination are achieved in one operation by use of hot air gun.

**Individual screen**
EMC shield (e.g. screenbraid) encompassing an individual wire in a bundle.

**Insert Arrangement**
The number, spacing and arrangement of contacts in a connector.

**IP rating**
The International Protection Rating classifies the degrees of protection provided against the intrusion of solid objects, dust, accidental contact, and water in electrical enclosures.
IP68 means that the installed component shall allow no ingress of dust and is suitable for continuous immersion in water beyond 1 metre, under conditions specified by the manufacturer. Where stated within this catalogue, the conditions are 1 metre submersion for 1 hour.

**Lacing Tape**
Lacing cord used as a binding medium to indicate an EMC classification of an open wiring harness.

**Nomex High Temperature Sleeving**
Flexible, abrasion resistant cable-sleeving capable of withstanding temperatures up to 245°C.

**Overall screen**
EMC shield (e.g. screenbraid) encompassing entire wire bundle.

**Protective Cover**
Provides environmental protection and EMC shielding on the front (mating end) of an unmated connector.

**RoHS**
The RoHS Directive bans the placing on the EU market of new electrical and electronic equipment containing more than agreed levels of lead, cadmium, mercury, hexavalent chromium, polybrominated biphenyl (PBB) and polybrominated diphenyl ether (PBDE) flame retardants.

**Screenbraid**
Flexible EMC shield in expanding sleeve form for covering cable.

**Shell size**
Two numerical digits state the size of the connector.

In D38999 there are nine shell sizes, which Polamco refers to as “09” to “25” in increments of 2. In D38999 these translate to shell sizes “A” to “J” (not including “I”).

**Shield**
See EMC

**Spin-coupling**
Spin-coupling backshells have a coupling nut that rotates freely on the backshell body.

**Square flange receptacle**
Connector held to a panel by four screws, one in each corner of the flange. Mates with plug.

**Step-up**
Refers to a backshell where the entry size ØG exceeds the throat diameter ØT.

**Strain relief**
Any method of relieving the strain on the individual wires, should the cable be put under tension. Common methods are cable clamps, heatshrink boots, tie posts.

**Style II assembly**
When the entry size ØG exceeds the throat diameter ØT (determined by the shell size), a style II assembly can be specified as a non-standard option. In a style II assembly, an additional low-profile spin-coupling front adaptor is supplied to effectively increase the shell size of the connector, so that the main (now called secondary) adaptor has a throat diameter larger than the entry size. This may be an advantage if the main adaptor needs to be slid back along the cable somewhat to give access to the connector grommet during installation. In 35, 36, 37 and 39 series, style II is supplied as standard whenever ØG exceeds ØT

**Torque differential**
Torque-differential backshells have an advanced anti-decoupling feature which favours tightening over decoupling with at least a 2:1 torque ratio.

# Index

Polamco

Interconnect Solutions Worldwide

*SERIES INDEX*


35 Series (Cone) ..... 220
36 Series (Cone) ..... 232
37 Series (Strain Relief) ..... 290
39 Series (Cone) ..... 244
60 Series (Memory Ring) ..... 126
63 Series (Conduit Backshell) ..... 324
64 Series (Cone) ..... 200
70 Series (Braid Tail) ..... 156
76 Series (Heat Shrink Boot) ..... 316
77 Series (Strain Relief) ..... 286
86 Series (Strain Relief) ..... 296
88 Series (Band) ..... 66
89 Series (Band) ..... 78
91 Series (Spring) ..... 106
95 Series (Braid Trap) ..... 144
96 Series (Strain Relief) ..... 276
97 Series (Heat Shrink Boot) ..... 300
98 Series (Grommet Compression Nut) ..... 320
100P2589 Series (Non-Metallic Conduit) ..... 330
150 Series (Heat Shrink Boot) ..... 354
308 Series (Cone) ..... 186
318 Series (Cone) ..... 194
1100 Series (Heat Shrink Boot) ..... 355
AP Series (Band) ..... 90
BT Series (Band) ..... 30
CS64 Series (Cone) ..... 256
DB Series (Band) ..... 60
DC Series (Extender/Angle Adaptor) ..... 344
DS Series (Band) ..... 94
KMA Series* (Mesh Tape) ..... 166
KMCC Series* (Mesh Tape) ..... 178
MB Series (Band) ..... 54
NP Series (Thread Adaptor) ..... 334
PBS90 (Screenbraid) ..... 351
PBS95 (Screenbraid) ..... 351
PE90 (Screenbraid) ..... 350
PE93 (Screenbraid) ..... 350
PG Series (Thread Adaptor) ..... 334
TAK Series (TAK) ..... 264
TM Series (Thread Adaptor) ..... 334
TU Series (Thread Adaptor) ..... 334
VG Series (Band) ..... 84
VG Series (Cone) ..... 198
VG Series (Heat Shrink Boot) ..... 318


*GENERAL INDEX*


Adhesives ..... 352
Associated Products ..... 348
Band Backshells ..... 30
Braid Tail Backshells ..... 156
Braid Trap Backshells ..... 144
Calculating Wire Bundle Diameter ..... 17
Conduit Backshells & Conduit ..... 323
Cone Backshells ..... 186
Connector Interface Table ..... 22
Grommet Compression Nut Backshells ..... 320
Heat Shrink Boot Backshells ..... 300
Heat Shrink Boots ..... 354
Material & Plating ..... 18
Memory Ring Backshells ..... 126
Mesh Tape Backshells ..... 166
Non-Screened Backshell Product Finder ..... 14
Non-Screened Backshells ..... 275
Part Numbering System ..... 16
POL125 (Adhesive) ..... 352
POL183 (Conductive Adhesive) ..... 352
RoHS Statement ..... 27
Screen Termination Band ..... 349
Screenbraid ..... 350
Screened Backshell Product Finder ..... 8
Screened Backshells ..... 29
Screened Termination Styles ..... 356
Spring Backshells ..... 106
Standard Derivatives: Modification Codes ..... 20
Standard Derivatives: Style T2 & T3 Adaptors ..... 21
Strain Relief Backshells ..... 276
TAK Backshells ..... 264
Thread Adaptors and Extenders ..... 333


* MANUFACTURED UNDER LICENCE 'AGUSTAWESTLAND HELICOPTERS UK PATENT 2239358'

Polamco

Interconnect Solutions Worldwide

Polamco

Interconnect Solutions Worldwide

# Mouser Electronics

Authorized Distributor

Click to View Pricing, Inventory, Delivery & Lifecycle Information:

TE Connectivity:

TAKH1-17-08-1-C-SB TAKH1-19-08-1-C-SB TAKH3-15-12-1-C-SB TAKA1-22-16-1-C-SB TAKD1-10-08-1-C-SB
TAKF1-16-05-1-C-SB TAKH1-21-16-1-C-SB TAKH2-09-05-1-C-SB TAKH2-21-10-1-C-UB TAKH3-13-05-1-C-SB
TAKF1-14-16-1-C-SB TAKF1-17-10-1-C-SB TAKF2-14-08-1-C-SB TAKH1-11-10-1-C-SB TAKH1-13-10-1-C-SB
TAKH1-17-20-1-C-SB TAKH3-21-10-1-C-UB TAKL1-16-05-1-C-SB TAKA1-14-05-1-C-SB TAKA1-16-05-1-C-SB
TAKA3-22-20-1-C-UB TAKD1-14-05-1-C-SB TAKH2-11-05-1-C-SB TAKH2-13-16-1-C-SB TAKH3-15-10-1-C-SB
TAKH3-15-10-1-C-UB TAKH3-17-08-1-C-SB TAKH3-17-12-1-C-UB TAKH1-13-05-1-C-SB TAKH1-13-05-1-C-UB
TAKH1-13-08-1-C-SB TAKH1-13-12-1-C-SB TAKH1-15-08-1-C-SB TAKH2-09-08-1-C-SB TAKA1-10-10-1-C-SB
TAKA2-22-20-1-C-UB TAKD1-14-16-1-C-SB TAKD1-16-12-1-C-SB TAKF1-14-05-1-C-SB TAKH1-11-16-1-C-SB
TAKH2-21-12-1-C-UB TAKH3-13-05-1-C-UB TAKH3-17-10-1-C-UB TAKH3-21-20-1-C-SB TAKA1-08-05-1-C-SB
TAKA1-10-05-1-C-SB TAKH1-17-05-1-C-SB TAKH1-21-12-1-C-UB TAKH1-21-16-1-C-UB TAKH2-11-12-1-C-SB
TAKH2-11-16-1-C-SB TAKH2-13-10-1-C-SB TAKF1-17-16-1-C-SB TAKH1-09-05-1-C-SB TAKH1-09-08-1-C-SB
TAKH1-09-08-1-C-UB TAKH1-11-05-1-C-SB TAKH1-11-12-1-C-SB TAKD1-12-05-1-C-SB TAKD1-12-08-1-C-SB
TAKD1-16-05-1-C-SB TAKF1-09-05-1-C-SB TAKF1-13-05-1-C-SB TAKF1-16-16-1-C-SB TAKH2-13-10-1-C-UB
TAKH2-13-12-1-C-SB TAKH2-15-12-1-C-SB TAKH2-15-16-1-C-SB TAKH3-09-05-1-C-SB TAKD1-08-05-1-C-SB
TAKH1-25-16-1-C-SB TAKH2-09-12-1-C-SB TAKH2-11-10-1-C-SB TAKH2-11-12-1-C-UB TAKH2-13-05-1-C-SB
TAKH2-13-05-1-C-UB TAKH1-13-16-1-C-SB TAKH1-13-20-1-C-SB TAKH1-15-05-1-C-SB TAKH1-15-12-1-C-SB
TAKH1-17-16-1-C-SB TAKH1-19-16-1-C-SB TAKF1-12-08-1-C-SB TAKF1-13-05-1-C-UB TAKF1-16-10-1-C-SB
TAKF2-10-10-1-C-SB TAKH1-09-16-1-C-SB TAKH1-11-08-1-C-SB TAKD1-08-10-1-C-UB TAKD1-14-08-1-C-SB
TAKD1-14-10-1-C-SB TAKF1-08-05-1-C-SB TAKF1-08-10-1-C-SB TAKF1-10-10-1-C-SB TAKH1-23-16-1-C-SB
TAKH2-09-10-1-C-SB TAKH2-11-08-1-C-SB TAKH2-13-08-1-C-SB TAKH2-15-10-1-C-SB TAKA1-12-05-1-C-SB