THIS DRAWING IS UNPUBLISHED. RELEASED FOR PUBLICATION 20
© COPYRIGHT 20 BY TYCO ELECTRONICS CORPORATION. ALL RIGHTS RESERVED.

PART NUMBER	REV	FIRST USED	POWER UNIT	FEED TYPE	DESCRIPTION
1852390-1	B	122500-1	LEADMAKER	POST FEED	CONT. CARRIER
1852390-2	B	565435-5	BENCH MODEL K	PRE FEED	CONT. CARRIER
1852390-3	B	354500-1	BENCH MODEL G	PRE FEED	CONT. CARRIER
7-1852390-7	B	-	-	-	SPARE PARTS

1. RECOMMENDED SPARE PARTS
2. GREASE LIGHTLY
3. GUARD MUST BE IN PLACE WHEN OPERATING APPLICATOR IN A BENCH MACHINE

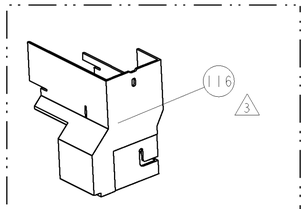

AMP-O-LECTRIC TERM GUARD

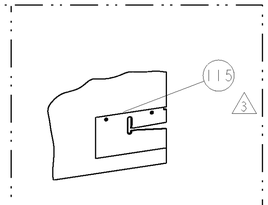

G TERMINATOR GUARD

TERMINAL NAME: MICRO QUADLOK SYSTEM

SOCKET	PIN
1827855-4	-
-	-
-	-
-	-
-	-
-	-
-	-
-	-
-	-
WIRE STRIP LENGTH 3.07-3.45	TERM APPL SPEC 114-5379

AMP TERMINAL - AMP CRIMP SPECS

PAD LTR	CRIMP HEIGHT	WIRE SIZE
A	0.64±0.05mm[.025±.002]	0.22mm
B	0.57±0.05mm[.022±.002]	0.13mm
C	-	-
D	-	-

CRIMP	SIZE	TYPE	RANGE
WIRE	0.99mm [.039]	F	0.13-0.22mm
INSUL	1.07mm [.042]	O	0.85-1.05mm

FEED	APPLICATOR INSTRUCTIONS	SET UP GAGE
6.98	408-8040	458637-1

LOC	DIST
A	66

REVISIONS

P	LTR	DESCRIPTION	DATE	DWN	APVD
	A	PRODUCT RELEASE	03JAN2007	CMR	GB
	B	ECR-07-008459	10JUL2007	BH	BH

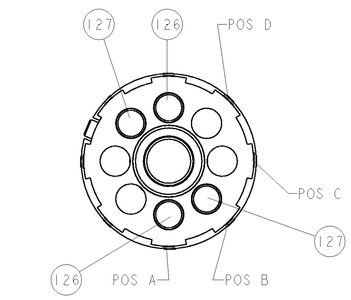

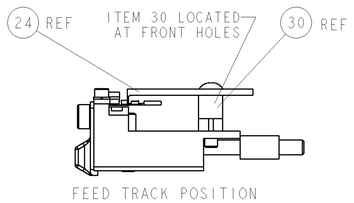

FEED TRACK POSITION

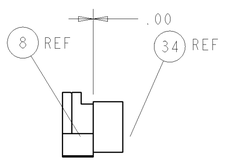

TERMINAL SUPPORT LOCATION

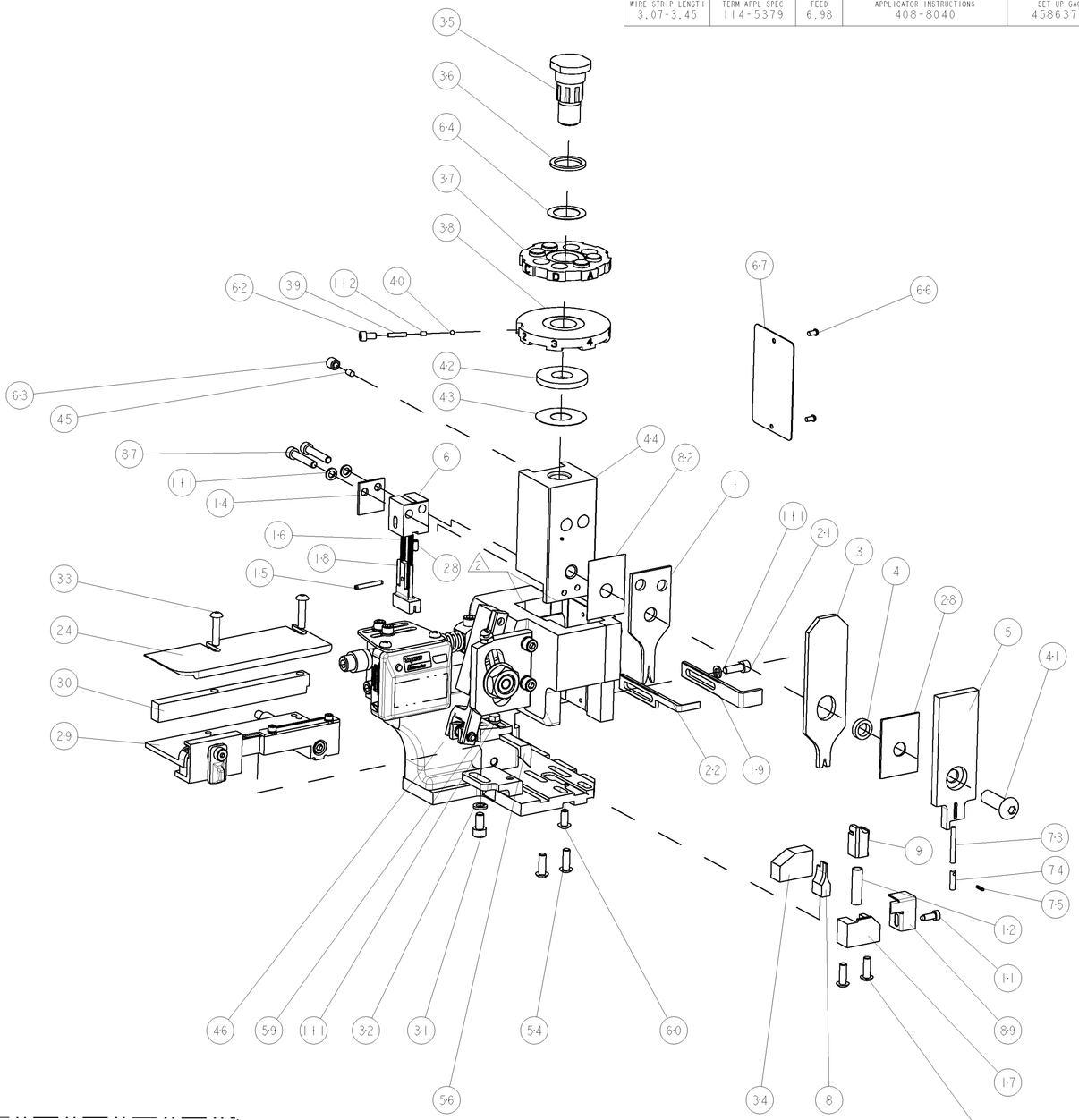

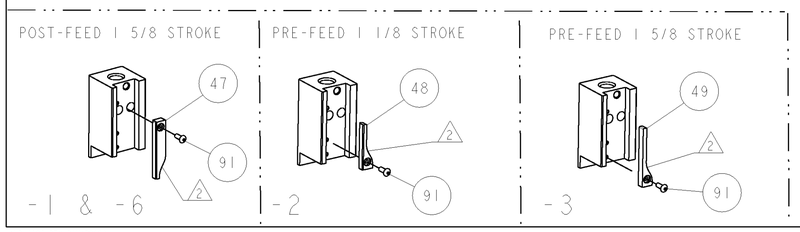

-	1	1	1	-	2-21008-1	SCR, SET, SELF LOCKING 1/4-20 X .250	128
-	2	2	2	-	4-354779-4	PIN, WIRE DISC, .3210	127
-	2	2	2	-	3-354779-6	PIN, WIRE DISC, .3170	126
3	-	REF	-	..	455749-1	GUARD WINDOW	116
3	REF	-	-	..	679532-1	INSERT, GUARD	115
-	1	1	1	-	690603-1	SPRING ASSIST AMP-O-MATOR APPLICATOR	112
-	4	4	4	-	21024-4	WASHER, SPRG LOCK, REG NO 8	111
-	1	1	1	-	1-21002-7	SCR, BTN SKT HD CAP 6-32 X .375	91
-	1	1	1	-	318563-1	GUARD, FRONT CHIP	89
-	2	2	2	-	3-21000-0	SCR, SKT HD CAP 8-32 X .875	87
-	1	1	1	-	455888-2	SPACER, CRIMPER	82
-	1	1	1	-	21028-2	PIN, SLOTTED SPRING .062 X .250	75
-	1	1	1	-	854769-4	HOLDER, INS	74
-	1	1	1	-	5-547505-2	SPRING, COMPRESSION	73
-	1	1	1	-	4088040	SF APPL INST 408-8040	72
-	1	1	1	-	217238-1	GENERAL INSTRUCTION PKG	71
-	1	1	1	-	461264-1	PLATE, IDENTIFICATION	67
-	2	2	2	-	21017-2	SCREW, DRIVE	66
-	1	1	1	-	986950-1	WASHER, FLAT PRECISION	64
-	1	1	1	-	21009-2	SCR, SET, SELF LOCKING 1/4-20 X .250	63
-	1	1	1	-	23030-1	SCR, SKT HD CAP 6-32 x .25	62
-	1	1	1	-	22733-8	SCR, BHSC, SELF-LOCKING, 8-32 X .375	60
-	1	1	1	-	2-22603-0	SCR, HEX HD CAP 8-32 X .312	59
-	1	1	1	-	458537-2	PAWL, FEED	56
-	4	4	4	-	2-21002-2	SCR, BTN SKT HD CAP 8-32 X .500	54
-	1	-	-	..	690602-6	CAM, PRE FEED, 1 5/8	49
-	-	1	-	..	690602-5	CAM, PRE FEED, 1 1/8	48
-	-	-	1	-	690501-4	CAM, POST FEED, 1 5/8	47
-	1	1	1	-	459456-1	APPL. BASIC SUB ASSY (SIDE WISE MQCA)	46
-	1	1	1	-	690191-1	PLUG,NYLON	45
-	1	1	1	-	455673-1	RAM, SIDE FEED	44
-	1	1	1	-	690125-1	SHIM SUB-ASSY	43
-	1	1	1	-	690124-4	WASHER, RAM (.135)	42
-	1	1	1	-	7-21002-9	SCR, BTN SKT HD CAP 5/16-24 X 1.00	41
-	1	1	1	-	23241-6	BALL, STEEL	40
-	1	1	1	-	690170-1	SPRING, COMPRESSION	39
-	1	1	1	-	690142-6	DISC, INSULATION	38
-	1	1	1	-	354777-1	WIRE DISC, ASSEMBLY	37
-	1	1	1	-	22480-5	SPRING, COMPRESSION	36
-	1	1	1	-	690212-1	POST, RAM	35
-	1	1	1	-	690786-7	TERMINAL SUPPORT	34
-	2	2	2	-	2-21002-4	SCR, BTN SKT HD CAP 8-32 X .750	33
-	1	1	1	-	21024-5	WASHER, SPRG LOCK, REG NO 10	32
-	1	1	1	-	3-21000-4	SCR, SKT HD CAP 10-32 X .375	31
-	1	1	1	-	1-1320908-7	SPACER, STRIP GUIDE	30
-	1	1	1	-	1633091-1	ASSEMBLY, STRIP GUIDE	29
-	1	1	1	-	1-455888-0	SPACER, CRIMPER	28
-	1	1	1	-	1320928-3	PLATE, STRIP GUIDE	24
-	-	-	1	-	1-690472-4	STRIPPER	22
-	1	1	1	-	2-21000-7	SCR, SKT HD CAP 8-32 X .500	21
-	1	1	-	-	690472-9	STRIPPER	19
-	1	1	1	.	1762987-5	TERMINAL HOLDER	18
1	1	1	1	-	679625-1	SHEAR HOLDER, FRONT (NO CUT)	17
-	2	2	2	-	4-22278-6	SPRING, COMPRESSION	16
-	1	1	1	-	4-21028-0	PIN, SLOTTED SPRING .094 X .750	15
-	1	1	1	-	455053-1	PLATE, RETAINING	14
-	1	1	1	-	3-22280-3	SPRING, COMPRESSION	12
-	1	1	1	-	690461-1	STOP, SHEAR	11
1	1	1	1	-	409284-2	SHEAR, FLOAT (FRONT)	9
1	1	1	1	-	1633105-8	ANVIL, COMBINATION .042	8
-	1	1	1	-	455052-1	CARRIER, HOLD DOWN	6
-	1	1	1	-	854772-9	DEPRESSOR, SHEAR	5
-	1	1	1	-	3-238011-8	BLOCK, CRIMPER SPACER	4
1	1	1	1	-	1596888-4	CRIMPER, INSULATION	3
1	1	1	1	-	1333281-9	CRIMPER, WIRE PREMIUM	1
-77	-3	-2	-1	U/M	PART NO	DESCRIPTION	ITEM NO

THIS DRAWING IS A CONTROLLED DOCUMENT FOR TYCO ELECTRONICS CORPORATION. IT IS SUBJECT TO CHANGE AND THE CONTROLLING ENGINEERING ORGANIZATION SHOULD BE CONTACTED FOR THE LATEST REVISION.

DIMENSIONS: INCHES

TOLERANCES UNLESS OTHERWISE SPECIFIED:
0 PLC ±
1 PLC ±0.1
2 PLC ±0.01
3 PLC ±0.001
4 PLC ±0.0001
ANGLES ±

MATERIAL - -
FINISH - -

DWN 8DEC2006 C. REICHELDERFER
CHK 8DEC2006 T. ELBIN
APVD 8DEC2006 T. BENCHOFF
PRODUCT SPEC - - -
APPLICATION SPEC -
WEIGHT -

tyco Electronics
Tyco Electronics
Harrisburg, PA 17105-3608

NAME SIDE FEED HDM APPLICATOR

SIZE	CAGE CODE	DRAWING NO	RESTRICTED TO
A1	00779	C-1852390	-

CUSTOMER DRAWING SCALE 3:5 SHEET 1 OF 1 REV B

CUSTOMER VIEWABLE ASSEMBLY

Mouser Electronics

Authorized Distributor

Click to View Pricing, Inventory, Delivery & Lifecycle Information:

TE Connectivity:

1852390-1