THIS DRAWING IS UNPUBLISHED. RELEASED FOR PUBLICATION 20

© COPYRIGHT 20 BY TYCO ELECTRONICS CORPORATION. ALL RIGHTS RESERVED.

PART NUMBER	REV	FIRST USED	POWER UNIT	FEED TYPE
1852005-1	A	122500-1	LEADMAKER	POST FEED
1852005-2	A	565435-5	BENCH MODEL K	PRE FEED
1852005-3	A	354500-1	BENCH MODEL G	PRE FEED

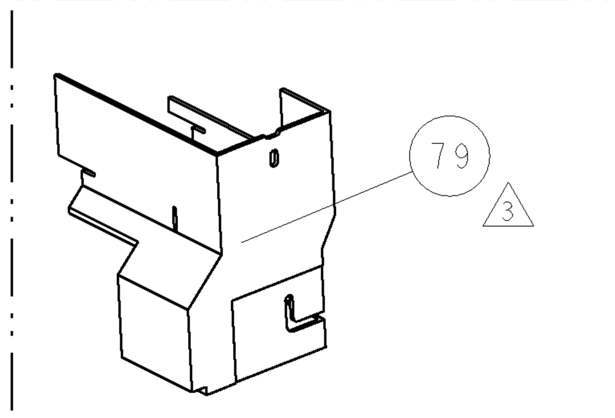

AMP-O-LECTRIC TERM GUARD

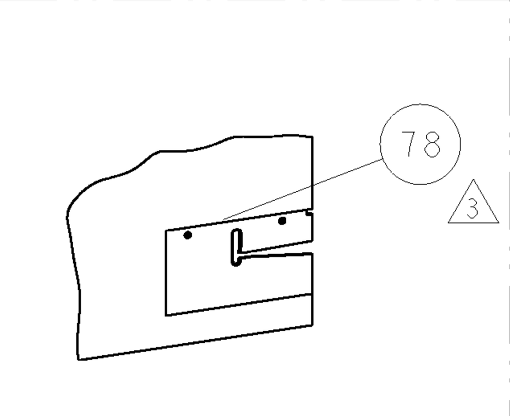

G TERMINATOR GUARD

LOC	DIST
A	66

REVISIONS

P	LTR	DESCRIPTION	DATE	DWN	APVD
	A	RELEASED	22MAR2005	LG	TE

TERMINAL NAME: HE090 TYPE MALE TERMINAL S

TYCO PN	MANF PN	SUMATOMO TERMIANL AND CRIMP SPECS			
1642725-2	8100-1571				
-	-	PAD LTR	CRIMP HEIGHT		WIRE SIZE
-	-	A	1.15±0.05mm[.045±.002]		0.5mm2
-	-	B	1.05±0.05mm[.041±.002]		0.3mm2
-	-	C	-		-
-	-	D	-		-
-	-	CRIMP	SIZE	TYPE	RANGE
-	-	WIRE	1.78mm[.070]	F	0.5-0.3mm2
-	-	INSUL	2.54mm[.100]	F	Ø1.4-2.1mm

WIRE STRIP LENGTH	TERM APPL SPEC	FEED	APPL INSTRUCTIONS	SET UP GAGE
3.76-4.14mm	NONE	10.058	408-8040	458637-1

1 RECOMMENDED SPARE PARTS
2 GREASE LIGHTLY
3 GUARD MUST BE IN PLACE WHEN OPERATING APPLICATOR IN A BENCH MACHINE

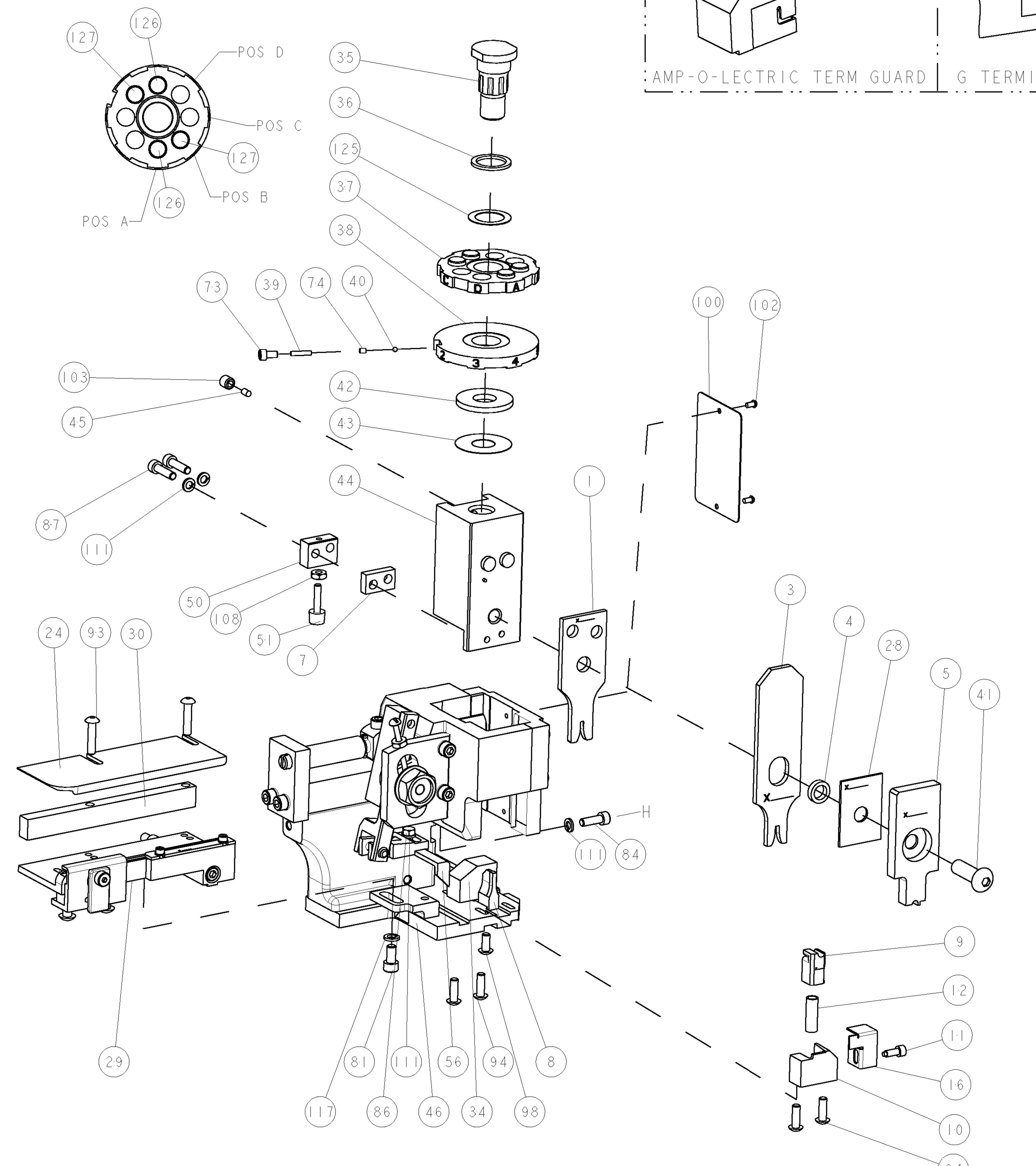

POST-FEED 1 5/8 STROKE | PRE-FEED 1 1/8 STROKE | PRE-FEED 1 5/8 STROKE

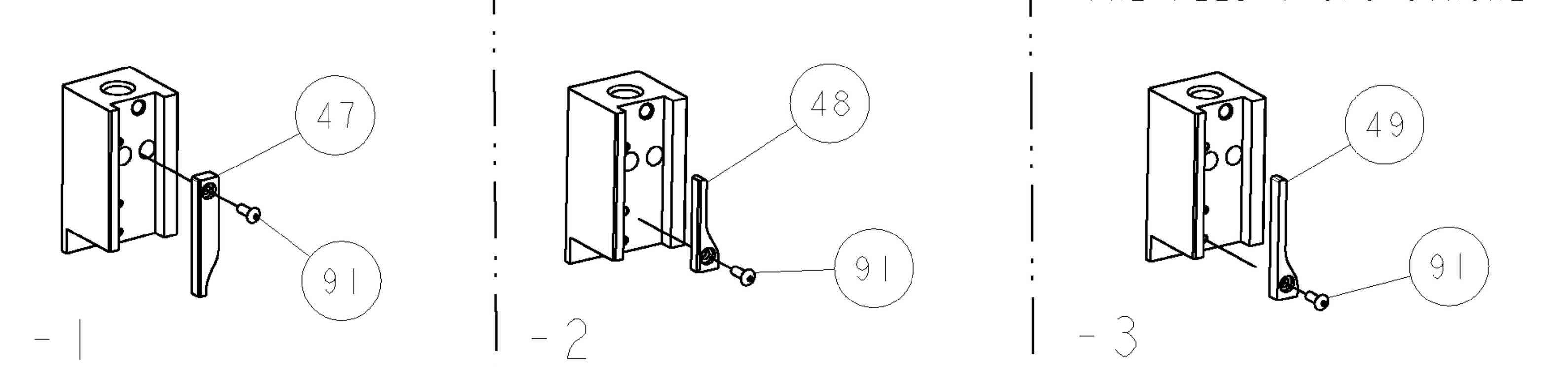

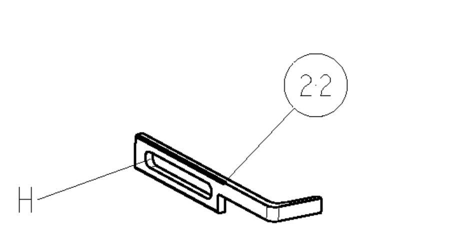

LEADMAKER

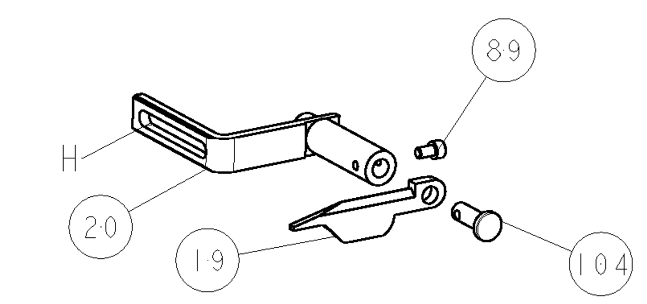

BENCH MACHINE

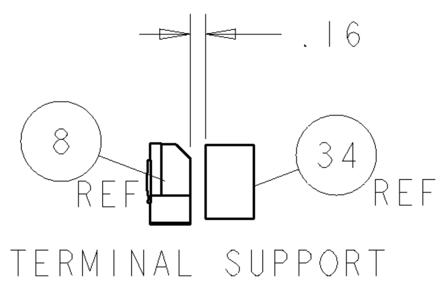

TERMINAL SUPPORT LOCATION

ITEM 30 LOCATED AT REAR HOLES

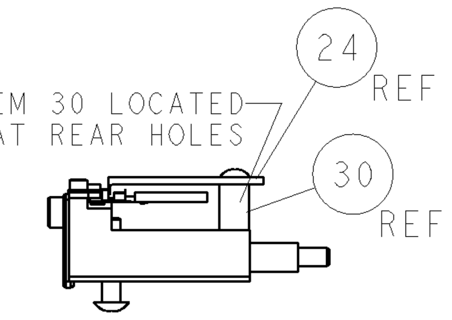

FEED TRACK POSITION

NOTE	-3	-2	-1	U/M	PART NO	DESCRIPTION	ITEM NO
	-	-	-	..	-	-	129
	-	-	-	..	-	-	128
	2	2	2	-	5-354779-3	PIN, WIRE DISC, .3255	127
	2	2	2	-	4-354779-4	PIN, WIRE DISC, .3210	126
	1	1	1	-	986950-1	WASHER, FLAT PRECISION	125
	1	1	1	-	217238-1	GENERAL INSTRUCTION PKG	124
	1	1	1	-	4088040	SF APPL INST 408-8040	123
	-	-	-	..	-	-	122
	-	-	-	..	-	-	121
	-	-	-	..	-	-	120
	-	-	-	..	-	-	119
	-	-	-	..	-	-	118
	1	1	1	-	21024-5	WASHER, SPRG LOCK, REG NO 10	117
	-	-	-	..	-	-	116
	-	-	-	..	-	-	115
	-	-	-	..	-	-	114
	-	-	-	..	-	-	113
	-	-	-	..	-	-	112
	4	4	4	-	21024-4	WASHER, SPRG LOCK, REG NO 8	111
	-	-	-	..	-	-	110
	-	-	-	..	-	-	109
	1	1	1	-	21018-5	NUT, HEX, REG 6-32	108
	-	-	-	..	-	-	107
	-	-	-	..	-	-	106
	-	-	-	..	-	-	105
	1	1	-	..	992031-1	PIN, CLEVIS	104
	1	1	1	-	21009-2	SCR, SET, SELF LOCKING 1/4-20 X .250	103
	2	2	2	-	21017-2	SCREW, DRIVE	102
	-	-	-	..	-	-	101
	1	1	1	-	461264-1	PLATE, IDENTIFICATION	100
	-	-	-	..	-	-	99
	1	1	1	-	22733-8	SCR, BHSC, SELF-LOCKING, 8-32 X .375	98
	-	-	-	..	-	-	97
	-	-	-	..	-	-	96
	-	-	-	..	-	-	95
	4	4	4	-	2-21002-2	SCR, BTN SKT HD CAP 8-32 X .500	94
	2	2	2	-	2-21002-4	SCR, BTN SKT HD CAP 8-32 X .750	93
	-	-	-	..	-	-	92
	1	1	1	-	1-21002-7	SCR, BTN SKT HD CAP 6-32 X .375	91
	-	-	-	..	-	-	90
	1	1	-	..	7-21000-9	SCR, SKT HD CAP 4-40 X .188	89
	-	-	-	..	-	-	88
	2	2	2	-	2-21000-8	SCR, SKT HD CAP 8-32 X .625	87
	1	1	1	-	2-22603-0	SCR, HEX HD CAP 8-32 X .312	86
	-	-	-	..	-	-	85
	1	1	1	-	2-21000-7	SCR, SKT HD CAP 8-32 X .500	84
	-	-	-	..	-	-	83
	-	-	-	..	-	-	82
	1	1	1	-	3-21000-4	SCR, SKT HD CAP 10-32 X .375	81
	-	-	-	..	-	-	80
3	-	REF	-	..	455749-1	GUARD WINDOW	79
3	REF	-	-	..	679532-1	INSERT, GUARD	78
	-	-	-	..	-	-	77
	-	-	-	..	-	-	76
	-	-	-	..	-	-	75
	1	1	1	-	690603-1	SPRING ASSIST AMP-O-MATOR APPLICATOR	74

NOTE	-3	-2	-1	U/M	PART NO	DESCRIPTION	ITEM NO
	1	1	1	-	23030-1	SCR, SKT HD CAP 6-32 x .25	73
	-	-	-	..	-	-	72
	-	-	-	..	-	-	71
	-	-	-	..	-	-	70
	-	-	-	..	-	-	69
	-	-	-	..	-	-	68
	-	-	-	..	-	-	67
	-	-	-	..	-	-	66
	-	-	-	..	-	-	65
	-	-	-	..	-	-	64
	-	-	-	..	-	-	63
	-	-	-	..	-	-	62
	-	-	-	..	-	-	61
	-	-	-	..	-	-	60
	-	-	-	..	-	-	59
	-	-	-	..	-	-	58
	-	-	-	..	-	-	57
	1	1	1	-	458537-2	PAWL, FEED	56
	-	-	-	..	-	-	55
	-	-	-	..	-	-	54
	-	-	-	..	-	-	53
	-	-	-	..	-	-	52
	1	1	1	-	811242-2	BUMPER, HOLD DOWN	51
	1	1	1	-	690753-1	SPACER, TONKER	50
	1	-	-	..	690602-6	CAM, PRE FEED, 1 5/8	49
	-	1	-	..	690602-5	CAM, PRE FEED, 1 1/8	48
	-	-	1	-	690501-4	CAM, POST FEED, 1 5/8	47
	1	1	1	-	459456-1	APPL. BASIC SUB ASSEMBLY	46
	1	1	1	-	690191-1	PLUG,NYLON	45
	1	1	1	-	455673-1	RAM	44
	1	1	1	-	690125-1	SHIM SUB-ASSY	43
	1	1	1	-	690124-1	WASHER, RAM (.115)	42
	1	1	1	-	7-21002-9	SCR, BTN SKT HD CAP 5/16-24 X 1.00	41
	1	1	1	-	23241-6	BALL, STEEL	40
	1	1	1	-	690170-1	SPRING, COMPRESSION	39
	1	1	1	-	690142-3	DISC, INSULATION	38
	1	1	1	-	354777-1	WIRE DISC, PLASTIC	37
	1	1	1	-	22480-5	SPRING, COMPRESSION	36
	1	1	1	-	690212-1	POST, RAM	35
	1	1	1	-	690786-3	TERMINAL SUPPORT	34
	-	-	-	..	-	-	33
	-	-	-	..	-	-	32
	-	-	-	..	-	-	31
	1	1	1	-	1320908-4	SPACER, STRIP GUIDE	30
	1	1	1	-	1633091-1	SUB-ASSEMBLY, FEEDTRACK	29
	1	1	1	-	1-455888-0	SPACER, CRIMPER	28
	-	-	-	..	-	-	27
	-	-	-	..	-	-	26
	-	-	-	..	-	-	25
	1	1	1	-	1320928-3	PLATE, STRIP GUIDE	24
	-	-	-	..	-	-	23
	-	-	1	-	690472-2	STRIPPER	22
	-	-	-	..	-	-	21
	1	1	-	..	679218-1	STRIPPER/ WIRE STOP ASSY	20
	1	1	-	..	458949-1	STRIPPER, SIDE	19
	-	-	-	..	-	-	18
	-	-	-	..	-	-	17
	1	1	1	-	318563-1	GUARD, FRONT CHIP	16
	-	-	-	..	-	-	15
	-	-	-	..	-	-	14
1	-	-	-	..	-	-	13
	1	1	1	-	5-22280-0	SPRING, COMPRESSION	12
	1	1	1	-	690461-1	STOP, SHEAR	11
	1	1	1	-	690459-1	SHEAR HOLDER, FRONT	10
1	1	1	1	-	462006-1	FLOATING SHEAR, FRONT	9
1	1	1	1	-	1-1633117-2	ANVIL, COMBINATION	8
	1	1	1	-	240641-3	SPACER	7
	-	-	-	..	-	-	6
	1	1	1	-	2-455889-0	DEPRESSOR, SHEAR	5
	1	1	1	-	238011-2	BLOCK, CRIMPER SPACER	4
1	1	1	1	-	4-456134-0	CRIMPER, INSULATION F PREMIUM	3
	-	-	-	..	-	-	2
1	1	1	1	-	2-568176-3	CRIMPER, WIRE	1

THIS DRAWING IS A CONTROLLED DOCUMENT FOR TYCO ELECTRONICS CORPORATION. IT IS SUBJECT TO CHANGE AND THE CONTROLLING ENGINEERING ORGANIZATION SHOULD BE CONTACTED FOR THE LATEST REVISION.

DIMENSIONS: INCHES

TOLERANCES UNLESS OTHERWISE SPECIFIED:
0 PLC ±-
1 PLC ±0.1
2 PLC ±0.01
3 PLC ±0.001
4 PLC ±0.0001
ANGLES ±-

MATERIAL - FINISH -

DWN L.GROSS 21FEB2005
CHK R.KNEPPER 21FEB2005
APVD T.ELBIN 21FEB2005
PRODUCT SPEC -
APPLICATION SPEC -
WEIGHT -

tyco Electronics — Tyco Electronics, Harrisburg, PA 17105-3608

NAME: SIDE FEED HDM APPLICATOR

SIZE	CAGE CODE	DRAWING NO	RESTRICTED TO
A1	00779	C-1852005	-

CUSTOMER DRAWING — SCALE 3:5 — SHEET 1 OF 1 — REV A

CUSTOMER VIEWABLE ASSEMBLY

AMP 4805 REV 31MAR2000

Pro/ENGINEER DRAWING

Mouser Electronics

Authorized Distributor

Click to View Pricing, Inventory, Delivery & Lifecycle Information:

TE Connectivity:

1852005-2