THIS DRAWING IS UNPUBLISHED. RELEASED FOR PUBLICATION 20
© COPYRIGHT 20 BY TYCO ELECTRONICS CORPORATION. ALL RIGHTS RESERVED.

PART NUMBER	REV	TERMINATOR	FEED TYPE	DESCRIPTION
1531034-1	B	BENCH & LEADMAKER	MECH POST FEED	HDI APPLICATOR
7-1531034-1	B	BENCH & LEADMAKER	MECH POST FEED	-1 AND SPARE PARTS
7-1531034-7	A	-	-	SPARE PARTS KIT

SET UP GAGE 458638-3

LOC	DIST
A	66

REVISIONS

P	LTR	DESCRIPTION	DATE	DWN	APVD
	A	RELEASED	24MAR2009	BH	BH
	B	ECR-09-013158	11JUN2009	BH	BH

CRIMP DATA	YAZAKI TERMINAL		TE CRIMP SPECS
TERMINAL NAME: -			
CRIMP	SIZE	TYPE	RANGE
WIRE	2.29 [.090 IN]	F	0.50mm2-1.25mm2
INSUL	3.30 [.130 IN]	F	Ø2.6mm MAX
WIRE STRIP LENGTH 2.00-3.00 [.078-.118 IN]			APPL INSTRUCTIONS 408-8323 & 408-8490
TERMINAL APPL SPEC	TE -		FEED 19.89 [.783 IN]

TERMINALS APPLIED

TE PN	YAZAKI PN	-	-
1949926-1	7116-2437-02	-	-
-	-	-	-
-	-	-	-
-	-	-	-

WIRE SIZE	CRIMP HEIGHT *	REF SETTING *
1.25mm² or 16AWG	1.35 ±0.05 [.053 ±.002 IN]	B5
1.00mm²	1.26 ±0.05 [.050 ±.002 IN]	C1
0.80mm² or 18AWG	1.19 ±0.05 [.047 ±.002 IN]	C7
0.50mm² or 20AWG	1.08 ±0.05 [.042 ±.002 IN]	D6
-	-	-
-	-	-
-	-	-
-	-	-
-	-	-
-	-	-
-	-	-
-	-	-
-	-	-

1. RECOMMENDED SPARE PARTS

2. GREASE RAM, CAM, CAM FOLLOWER AND FEED ROD LIGHTLY.

3. CERTAIN TERMINALS REQUIRE LUBRICATION. REFER TO THE APPLICATOR INSTRUCTION SHEET FOR MORE INFORMATION.

4. LUBRICATE DAILY PER THE APPLICATOR INSTRUCTION SHEET SUPPLIED WITH THE APPLICATOR.

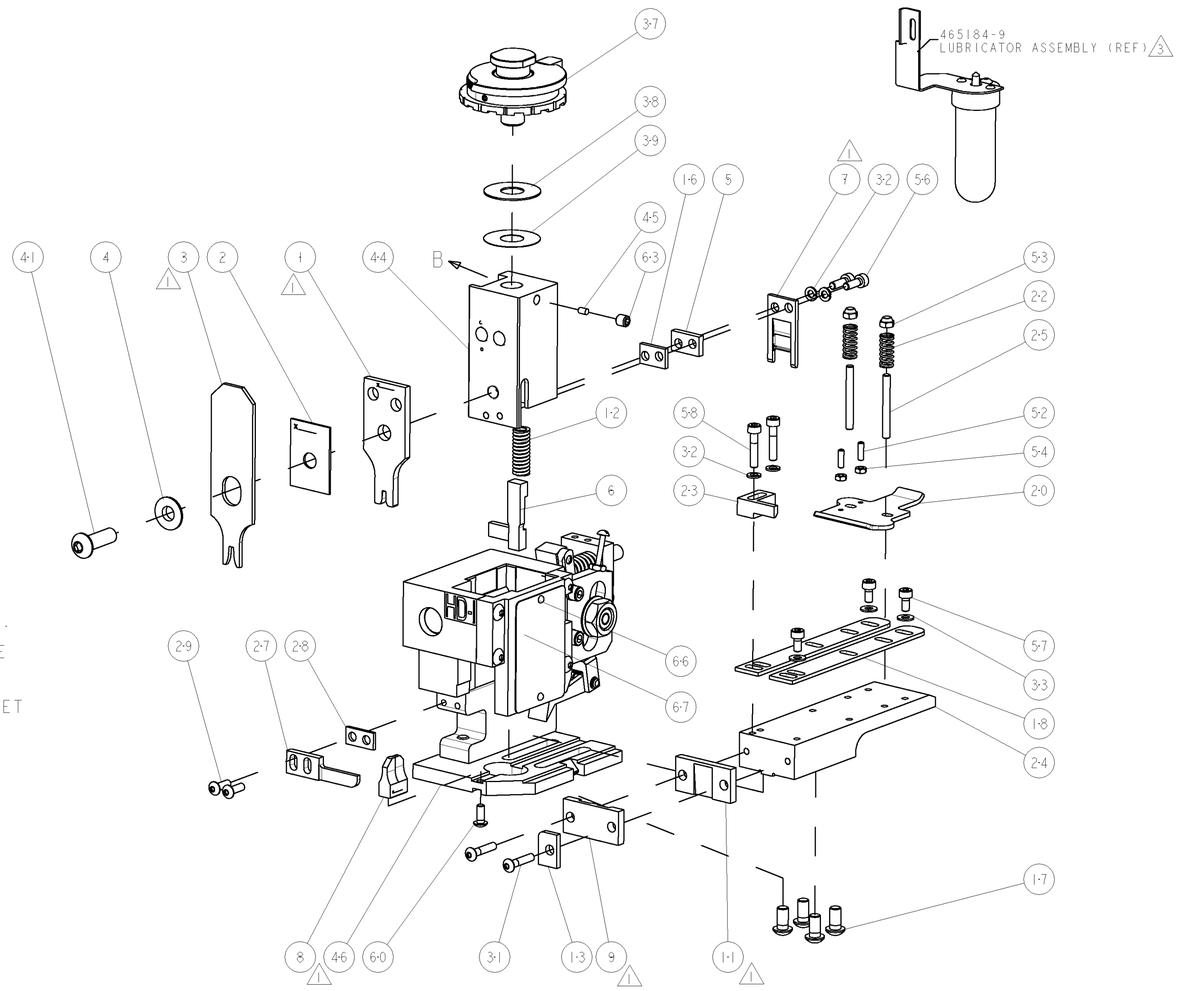

-	1	1	1338705-4	DOCUMENTATION PACKAGE	71
-	1	1	461264-5	PLATE, IDENTIFICATION	67
-	2	2	21017-2	SCREW, DRIVE	66
-	1	1	3-18031-0	SCR, SET, CUP POINT M6 X 6.0	63
-	1	1	18024-7	SCR, BTN SKT HD CAP (M4 X 10.0)	60
-	2	2	1-18023-4	SCR, SKT HD CAP M4 X 20.0	58
-	3	3	1-18023-0	SCR, SKT HD CAP M4 X 8.0	57
-	2	2	1-18023-2	SCR, SKT HD CAP M4 X 12.0	56
-	2	2	18029-1	NUT, HEX, REG M3	54
-	2	2	986965-1	NUT, LOCK, HEX, TORQUE (M4)	53
-	2	2	2-18032-2	SCR, SET, FLT POINT M3 X 10.0	52
-	1	1	18024-3	SCR, BTN SKT HD CAP (M3 X 10.0)	49
-	1	1	1338676-1	CAM, UNIVERSAL POST-FEED	47
-	1	1	1338662-1	SUB ASSY, APPLICATOR FRAME	46
-	1	1	690191-1	PLUG,NYLON	45
-	1	1	1320998-1	RAM	44
-	1	1	2-18024-6	SCR, BTN SKT HD CAP (M8 X 25.0)	41
-	1	1	690125-1	SHIM SUB-ASSY	39
-	1	1	469367-8	SHIM	38
-	1	1	879103-3	FINE ADJUST HEAD ASSEMBLY	37
-	3	3	18027-2	WASHER, FLAT, REG M4	33
-	4	4	18025-2	WASHER, SPRG LOCK, REG M4	32
-	2	2	1-18024-0	SCR, BTN SKT HD CAP (M4 X 20.0)	31
-	2	2	18024-8	SCR, BTN SKT HD CAP (M4 X 12.0)	29
-	1	1	3-690451-2	SPACER, STRIPPER	28
-	1	1	240639-1	STRIPPER (MACHINING)	27
-	2	2	1320906-1	STUD, THREADED	25
-	1	1	1320995-1	PLATE, STRIP GUIDE	24
-	1	1	240825-1	PLATE, STRIP HOLD DOWN	23
-	2	2	4-22281-1	SPRING, DRAG	22
-	1	1	1338665-1	DRAG	20
-	2	2	1338663-4	GUIDE, LOWER STRIP	18
-	4	4	1-18024-8	SCR, BTN SKT HD CAP (M6 X 12.0)	17
-	1	1	1338708-1	SPACER, SLUG BLADE	16
-	1	1	690481-5	SPACER, HOLD DOWN	13
-	1	1	23846-1	SPRING, DIE	12
-	1	1	240644-1	PLATE, REAR SHEAR	11
-	-	-	-	-	10
-	1	1	690482-5	PLATE, FRONT SHEAR	9
1	1	1	1-1338673-0	ANVIL, COMBINATION	8
-	1	1	690474-5	BLADE, SLUG	7
-	1	1	2-455892-1	HOLD DOWN, TERMINAL	6
-	1	1	240641-1	SPACER	5
-	1	1	238009-8	BLOCK, FL CRIMPER SPACER	4
1	1	1	4-456134-4	CRIMPER, INSULATION F PREMIUM	3
-	1	1	455888-9	SPACER, CRIMPER	2
1	1	1	4-456406-5	CRIMPER, WIRE PREMIUM	1
-77	-71	-1	PART NO	DESCRIPTION	ITEM NO

VIEW B ROTATED 180°

POST-FEED 40mm STROKE

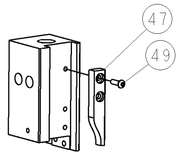

POST-FEED 30mm STROKE

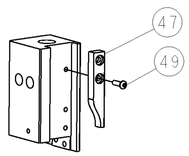

* WARNING

ON INSTALLATION, SET WIRE DISC TO LARGEST WIRE SIZE SETTING. USE OF SETTINGS BELOW MIN. REQUIRED CRIMP HEIGHT SETTING WILL CAUSE DAMAGE TO CRIMP TOOLING.

THIS DRAWING IS A CONTROLLED DOCUMENT OF TYCO ELECTRONICS CORPORATION. IT IS SUBJECT TO CHANGE. ANY QUESTIONS REGARDING THIS DRAWING OR ORGANIZATION SHOULD BE CONTACTED FOR THE LATEST REVISION.

DIMENSIONS: INCHES

TOLERANCES UNLESS OTHERWISE SPECIFIED:
0 PLC ±-
1 PLC ±0.1
2 PLC ±0.01
3 PLC ±0.001
4 PLC ±0.0001
ANGLES ±-

MATERIAL - -
FINISH - -

DWN	B HIGMAN	09MAR2009
CHK	T ELBIN	09MAR2009
APVD	N DEMING	09MAR2009
PRODUCT SPEC	-	
APPLICATION SPEC	-	
WEIGHT	-	

Tyco Electronics
Tyco Electronics
Harrisburg, PA 17105-3608

NAME: FINE ADJUST END FEED HDI APPLICATOR -

SIZE	CAGE CODE	DRAWING NO	RESTRICTED TO
A1	00779	C-1531034	-

CUSTOMER DRAWING | SCALE 3:5 | SHEET 1 OF 1 | REV B

CUSTOMER VIEWABLE ASSEMBLY

Mouser Electronics

Authorized Distributor

Click to View Pricing, Inventory, Delivery & Lifecycle Information:

TE Connectivity:

1531034-1