THIS DRAWING IS UNPUBLISHED. RELEASED FOR PUBLICATION 20
© COPYRIGHT 20 BY TYCO ELECTRONICS CORPORATION ALL RIGHTS RESERVED

PART NUMBER	REV	TERMINATOR	FEED TYPE	DESCRIPTION
1530095-1	A	LEADMAKER	MECH POST FEED	CUTS CARRIER
1530095-2	A	BENCH	MECH PRE FEED	CUTS CARRIER
1530095-6	A	LEADMAKER	MECH POST FEED	CONTINUOUS CARRIER
7-1530095-1	A	LEADMAKER	MECH POST FEED	-1 AND SPARE PARTS
7-1530095-2	A	BENCH	MECH PRE FEED	-2 AND SPARE PARTS
7-1530095-6	A	LEADMAKER	MECH POST FEED	-6 AND SPARE PARTS
7-1530095-7	A	-	-	SPARE PARTS KIT

SET UP GAGE 458637-3

LOC	DIST
A	66

REVISIONS

F	LTR	DESCRIPTION	DATE	DWN	APVD
	A	RELEASED	26MAR2009	KH	ND

CRIMP DATA	FORD TERMINAL		TE CRIMP SPECS
TERMINAL NAME: TERMINAL			
CRIMP	SIZE	TYPE	RANGE
WIRE	2.29 [.090 IN]	F	20-18 AWG
INSUL	2.79 [.110 IN]	F	Ø2.1[.083 IN] MAX
WIRE STRIP LENGTH 4.00-5.50 [.157-.217 IN]			APPL INSTRUCTIONS 408-8322 & 408-8490
TERMINAL APPL SPEC	NONE - -		FEED 24.00 [.945 IN]

TERMINALS APPLIED

TE PN	MFR PN	-	-
1949919-1	F65B-14474-EA	-	-
1949920-1	F2AB-14474-CA	-	-
-	-	-	-
-	-	-	-

WIRE SIZE	CRIMP HEIGHT *	REF SETTING *
18 AWG	1.60 ±0.05 [.063 ±.002 IN]	B8
20 AWG	1.48 ±0.05 [.058 ±.002 IN]	D1
-	-	-
-	-	-
-	-	-
-	-	-
-	-	-
-	-	-
-	-	-
-	-	-
-	-	-
-	-	-

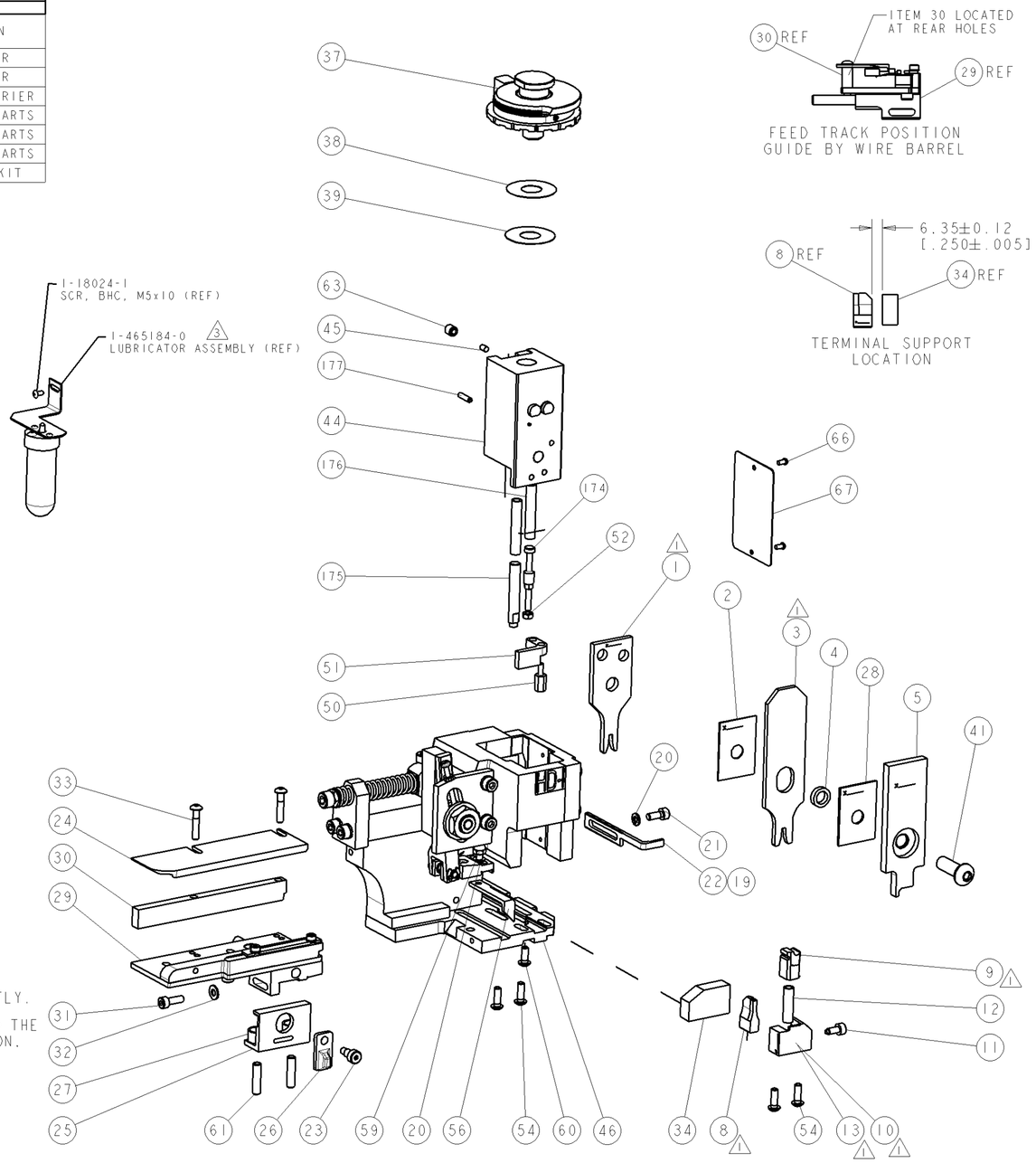

1. RECOMMENDED SPARE PARTS.
2. GREASE RAM, CAM, CAM FOLLOWER AND FEED ROD LIGHTLY.
3. CERTAIN TERMINALS REQUIRE LUBRICATION. REFER TO THE APPLICATOR INSTRUCTION SHEET FOR MORE INFORMATION.
4. LUBRICATE DAILY PER THE APPLICATOR INSTRUCTION SHEET SUPPLIED WITH THE APPLICATOR.

* WARNING
ON INSTALLATION, SET WIRE DISC TO LARGEST WIRE SIZE SETTING. USE OF SETTINGS BELOW MIN. REQUIRED CRIMP HEIGHT SETTING WILL CAUSE DAMAGE TO CRIMP TOOLING.

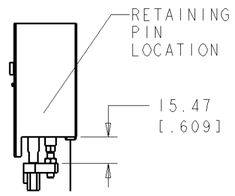

HOLDDOWN SET-UP

VIEW B ROTATED 180°

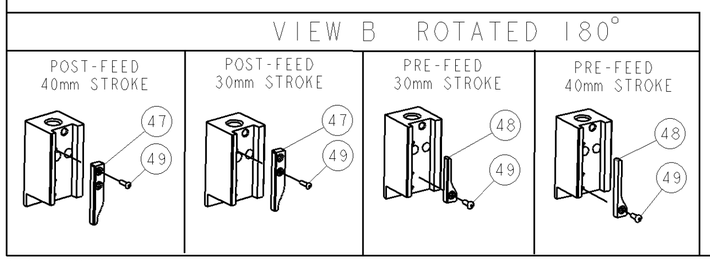

							PART NO	DESCRIPTION	ITEM NO
-	1	1	1	1	1	1	993111-8	PIN, SLOTTED SPRING 3.0 X 12.0	177
-	2	2	2	2	2	2	3-22280-7	SPRING, COMPRESSION	176
-	1	1	1	1	1	1	1752353-1	GUIDE PIN,HOLDDOWN	175
-	1	1	1	1	1	1	1901680-1	GUIDE PIN,HOLDDOWN	174
-	1	1	1	1	1	1	1338705-3	DOCUMENTATION PACKAGE	71
-	1	1	1	1	1	1	461264-5	PLATE, IDENTIFICATION	67
-	2	2	2	2	2	2	21017-2	SCREW, DRIVE	66
-	1	1	1	1	1	1	3-18031-0	SCR, SET, CUP POINT M6 X 6.0	63
-	2	2	2	2	2	2	2-18032-5	SCR, SET, FLT POINT M5 X 20.0	61
-	1	1	1	1	1	1	18024-7	SCR, BTN SKT HD CAP (M4 X 10.0)	60
-	1	1	1	1	1	1	5-18022-2	SCR, HEX HD CAP M4 X 8.0	59
-	1	1	1	1	1	1	1338685-1	PAWL, FEED	56
-	4	4	4	4	4	4	18024-8	SCR, BTN SKT HD CAP (M4 X 12.0)	54
-	1	1	1	1	1	1	1-18030-0	NUT, HEX, REG M3.5	52
-	1	1	1	1	1	1	1901681-1	HOLDDOWN, TERMINAL	51
-	1	1	1	1	1	1	2-1752354-4	STANDOFF,HOLD-DOWN	50
-	1	1	1	1	1	1	18024-3	SCR, BTN SKT HD CAP (M3 X 10.0)	49
-	-	1	-	-	1	-	1338675-1	CAM, UNIVERSAL PRE-FEED	48
-	1	-	1	1	-	1	1338676-1	CAM, UNIVERSAL POST-FEED	47
-	1	1	1	1	1	1	1320999-3	APPLICATOR SUBASSEMBLY, HDI	46
-	1	1	1	1	1	1	690191-1	PLUG,NYLON	45
-	1	1	1	1	1	1	1633724-1	RAM, (SIDE FEED)	44
-	1	1	1	1	1	1	2-18024-6	SCR, BTN SKT HD CAP (M8 X 25.0)	41
-	1	1	1	1	1	1	690125-1	SHIM SUB-ASSY	39
-	1	1	1	1	1	1	469367-1	SHIM	38
-	1	1	1	1	1	1	879103-3	FINE ADJUST HEAD ASSEMBLY	37
-	1	1	1	1	1	1	1-1752356-3	SUPPORT, TERMINAL	34
-	2	2	2	2	2	2	1-18024-0	SCR, BTN SKT HD CAP (M4 X 20.0)	33
-	1	1	1	1	1	1	18027-2	WASHER, FLAT, REG M4	32
-	1	1	1	1	1	1	1-18023-2	SCR, SKT HD CAP M4 X 12.0	31
-	1	1	1	1	1	1	1320908-1	SPACER, STRIP GUIDE	30
-	1	1	1	1	1	1	1633073-1	STRIP GUIDE ASSEMBLY	29
-	1	1	1	1	1	1	1-455888-0	SPACER, CRIMPER	28
-	2	2	2	2	2	2	1-22284-0	SPRING, COMPRESSION	27
-	1	1	1	1	1	1	356835-1	LEVER, DRAG RELEASE	26
-	1	1	1	1	1	1	240792-1	DRAG, TERMINAL	25
-	1	1	1	1	1	1	1320928-1	PLATE, STRIP GUIDE	24
-	1	1	1	1	1	1	980371-4	SCR, SKT HD SHLDR 5.0 DIA X 6.0	23
-	1	-	1	1	-	1	690472-2	STRIPPER	22
-	1	1	1	1	1	1	1-18023-1	SCR, SKT HD CAP M4 X 10.0	21
-	2	2	2	2	2	2	18025-2	WASHER, SPRG LOCK, REG M4	20
-	-	1	-	-	1	-	690472-1	STRIPPER	19
-	1	1	1	1	1	1	1338684-1	SHEAR HOLDER, FRONT	13
-	1	1	1	1	1	1	3-22280-3	SPRING, COMPRESSION	12
-	1	1	1	1	1	1	356885-4	STOP, SHEAR	11
-	-	1	1	-	1	1	1320921-1	SHEAR HOLDER, FRONT, CUT	10
-	1	1	1	1	1	1	462006-1	FLOATING SHEAR, FRONT	9
1	2	2	2	1	1	1	8-1333205-0	ANVIL, COMBINATION	8
-	-	-	-	-	-	-	-	-	7
-	-	-	-	-	-	-	-	-	6
-	1	1	1	1	1	1	2-455889-0	DEPRESSOR, SHEAR	5
-	1	1	1	1	1	1	238011-2	BLOCK, CRIMPER SPACER	4
1	2	2	2	1	1	1	1-456134-5	CRIMPER, INSULATION F PREMIUM	3
-	1	1	1	1	1	1	455888-5	SPACER, CRIMPER	2
1	2	2	2	1	1	1	4-456406-4	CRIMPER, WIRE PREMIUM	1
-77	-76	-72	-71	-6	-2	-1			

THIS DRAWING IS A CONTROLLED DOCUMENT FOR TYCO ELECTRONICS CORPORATION. IT IS SUBJECT TO CHANGE AND THE CONTROLLING ENGINEERING ORGANIZATION SHOULD BE CONTACTED FOR THE LATEST REVISION.

DIMENSIONS: mm [IN]

TOLERANCES UNLESS OTHERWISE SPECIFIED:
0 PLC ±-
1 PLC ±-
2 PLC ±-
3 PLC ±-
4 PLC ±-
ANGLES ±-

MATERIAL - -
FINISH - -

DWN	K.HUANG	16MAR2009
CHK	M.HERR	16MAR2009
APVD	N.DEMING	16MAR2009

PRODUCT SPEC -
APPLICATION SPEC See Table
WEIGHT -

Tyco Electronics
Tyco Electronics
Harrisburg, PA 17105-3608

NAME: FINE ADJUST SIDE FEED HDI APPLICATOR -

SIZE	CAGE CODE	DRAWING NO	RESTRICTED TO
A1	00779	C-1530095	-

CUSTOMER DRAWING
SCALE 3:5 SHEET 1 OF 1 REV A

Mouser Electronics

Authorized Distributor

Click to View Pricing, Inventory, Delivery & Lifecycle Information:

TE Connectivity:

1530095-2