THIS DRAWING IS UNPUBLISHED. RELEASED FOR PUBLICATION 20
© COPYRIGHT 20 BY TYCO ELECTRONICS CORPORATION. ALL RIGHTS RESERVED.

LOC	DIST
FX	00

REVISIONS

P	LTR	DESCRIPTION	DATE	DWN	APVD
	A11	REVISED PER ECO-10-020914	22NOV2010	DLD	DCM

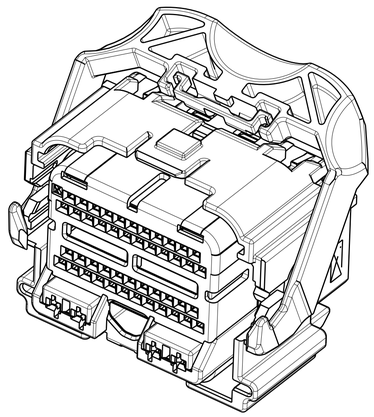

PART NUMBER:
1438693-1
SHOWN WITH SPACER
IN SEATED POSITION
SCALE 2:1

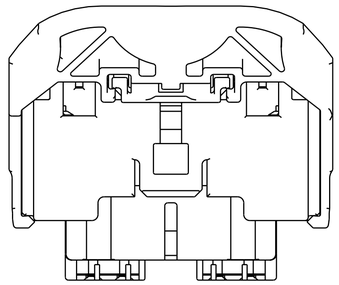

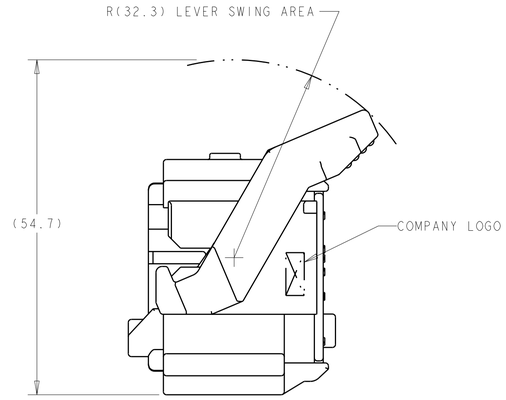

SHOWN WITH SPACER IN SEATED POSITION

1. PRINT TYCO ELECTRONICS PART NUMBER AND TRACEBILITY (YY : 2 DIGIT YEAR, JJJ = JULIAN DATE, HH = 2 DIGIT MILITARY HOUR CODE) IN THE LOCATION AT ASSEMBLY.

2. OPTIONAL WIRE SHIELD PART NUMBERS (SOLD SEPARATELY) 1438126, 1438180, 1488373, AND 1488572. CONTACT TYCO ELECTRONICS ENGINEER FOR MINIMUM FEED THRU CONDITION.

3. APPLICABLE TERMINAL PART NUMBERS (SOLD SEPARATELY)
FOR TIN APPLICATIONS: 1393367 AND 1393366.
FOR GOLD APPLICATIONS: 1393365 AND 1393364
FOR TERMINATION AND REELING OPTIONS SEE DRAWINGS 1393367. 1393366, 1393365, AND 1393364.

4. APPLICABLE MOLEX (1.5) POWER TERMINAL PART NUMBERS:
33012-0002 TIN 0.50-1.50mm^2

5. CAM LEVER AND SPACER ARE SHIPPED IN THEIR PRE-SEASSEMBLED POSITIONS.

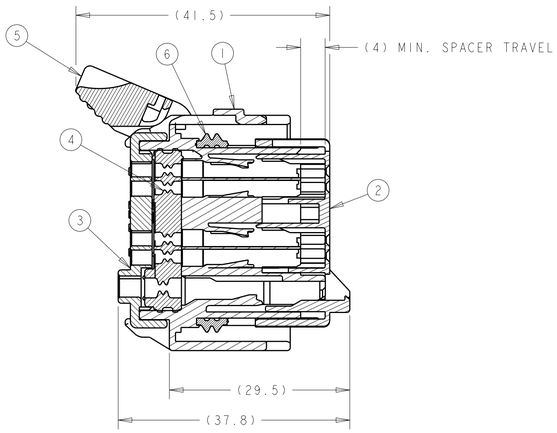

SECTION A-A
SPACER AND LEVER IN
PRE-SEATED POSITION
(DELIVERY CONDITION)

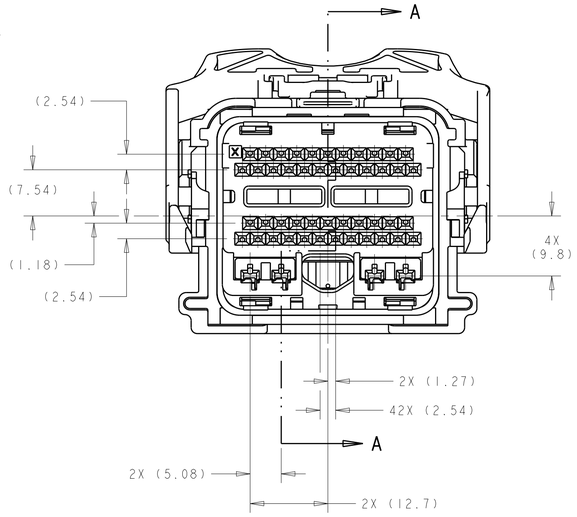

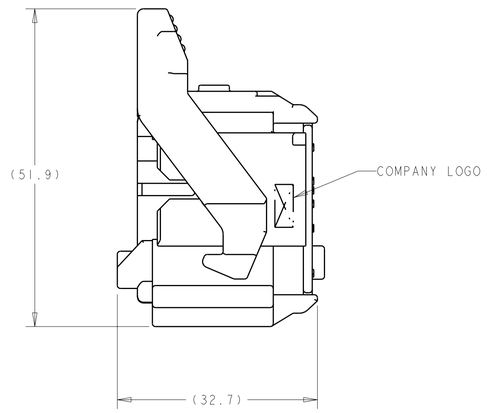

SHOWN WITH CAM
LEVER AND SPACER
IN LOADED POSITION

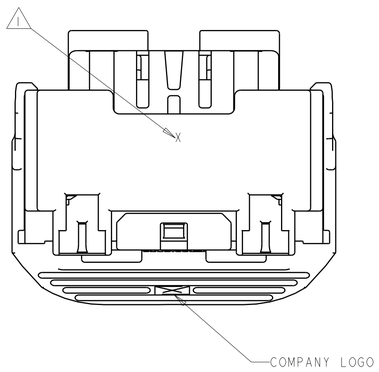

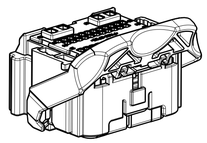

SCALE 1:1

PART COLOR	DESCRIPTION	ITEM NO.
GREEN	PERIMETER SEAL	6
GRAY	LEVER	5
BROWN	GROMMET SEAL	4
BLACK	COVER	3
NATURAL	SPACER	2
BLACK	HARNESS, KEY "C"	1

THIS DRAWING IS A CONTROLLED DOCUMENT FOR TYCO ELECTRONICS CORPORATION. IT IS SUBJECT TO CHANGE AND THE CONTROLLING ENGINEERING ORGANIZATION SHOULD BE CONTACTED FOR THE LATEST REVISION.

DIMENSIONS: mm

TOLERANCES UNLESS OTHERWISE SPECIFIED:
0 PLC ±-
1 PLC ±0.3
2 PLC ±0.10
3 PLC ±-
4 PLC ±-
ANGLES ±1°

MATERIAL -
FINISH -

DWN 21JUL2004 B. CRISAMORE
CHK 21JUL2004 M. HITCHCOCK
APVD 21JUL2004 C. MARTIN
PRODUCT SPEC -
APPLICATION SPEC -
WEIGHT -

Tyco Electronics
Tyco Electronics
Harrisburg, PA 17105-3608

NAME
PCM
50-WAY HARNESS ASSEMBLY
KEY C

SIZE	CAGE CODE	DRAWING NO	RESTRICTED TO
A1	00779	C-1438693	-

CUSTOMER DRAWING | SCALE 2:1 | SHEET 1 OF 4 | REV A11

THIS DRAWING IS UNPUBLISHED. RELEASED FOR PUBLICATION 20
© COPYRIGHT 20 BY TYCO ELECTRONICS CORPORATION. ALL RIGHTS RESERVED.

APPLICABLE HEADER INTERFACE SPECIFICATION

SHOWN WITHOUT KEYING OPTIONS

LOC	DIST
FX	00

REVISIONS

P	LTR	DESCRIPTION	DATE	DWN	APVD
	-	SEE SHEET 1	-	-	-

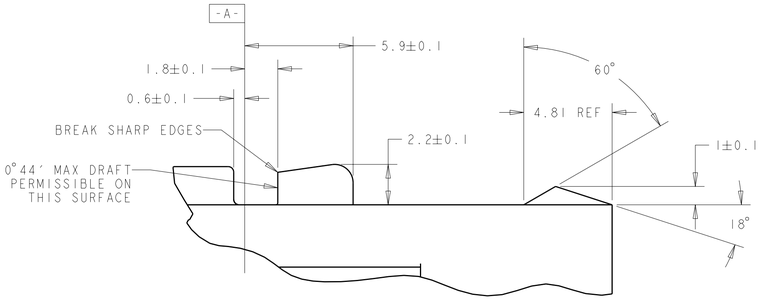

DETAIL F
SCALE 6:1

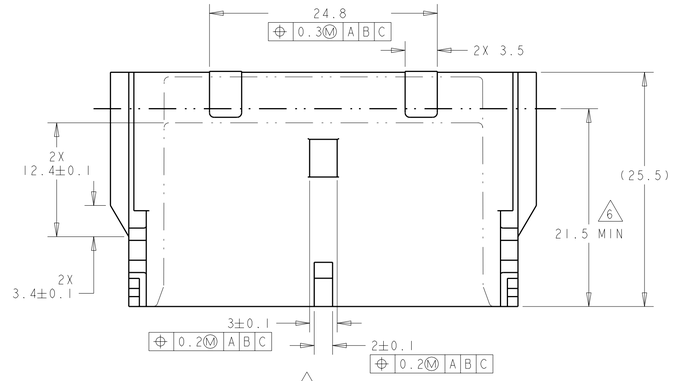

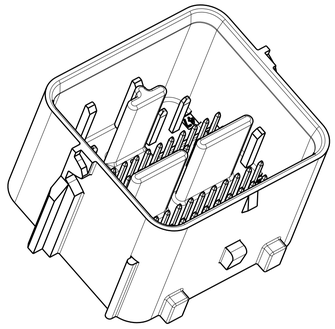

SCALE 2:1

NOTES: UNLESS OTHERWISE SPECIFIED

1. GENERAL TOLERANCE:
   ±0.3 ALL ONE PLACE DIMENSIONS
   ±0.10 ALL TWO PLACE DIMENSIONS
   ±1°00′ ALL ANGULAR DIMENSIONS
2. DRAFT ANGLE PERMISSIBLE ONLY WITHIN DRAWING TOLERANCE.
3. SEALING SURFACE, NO WITNESS LINES OR DAMAGE PERMITTED.
4. ALL UNMARKED RADII TO BE 0.5 MAX., UNLESS OTHERWISE SPECIFIED.
5. VENT HOLE SIZE AND LOCATION IS OPTIONAL.
6. THIS AREA TO REMAIN CLEAR FOR THE HARNESS ASSEMBLY.
7. TERMINAL POSITION IDENTIFICATION.

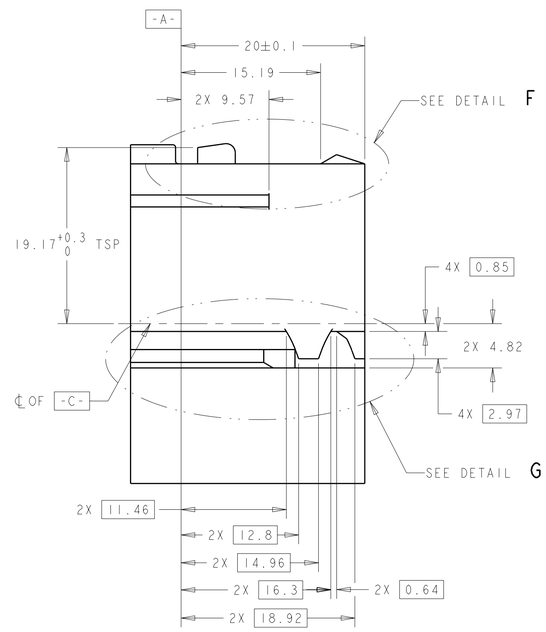

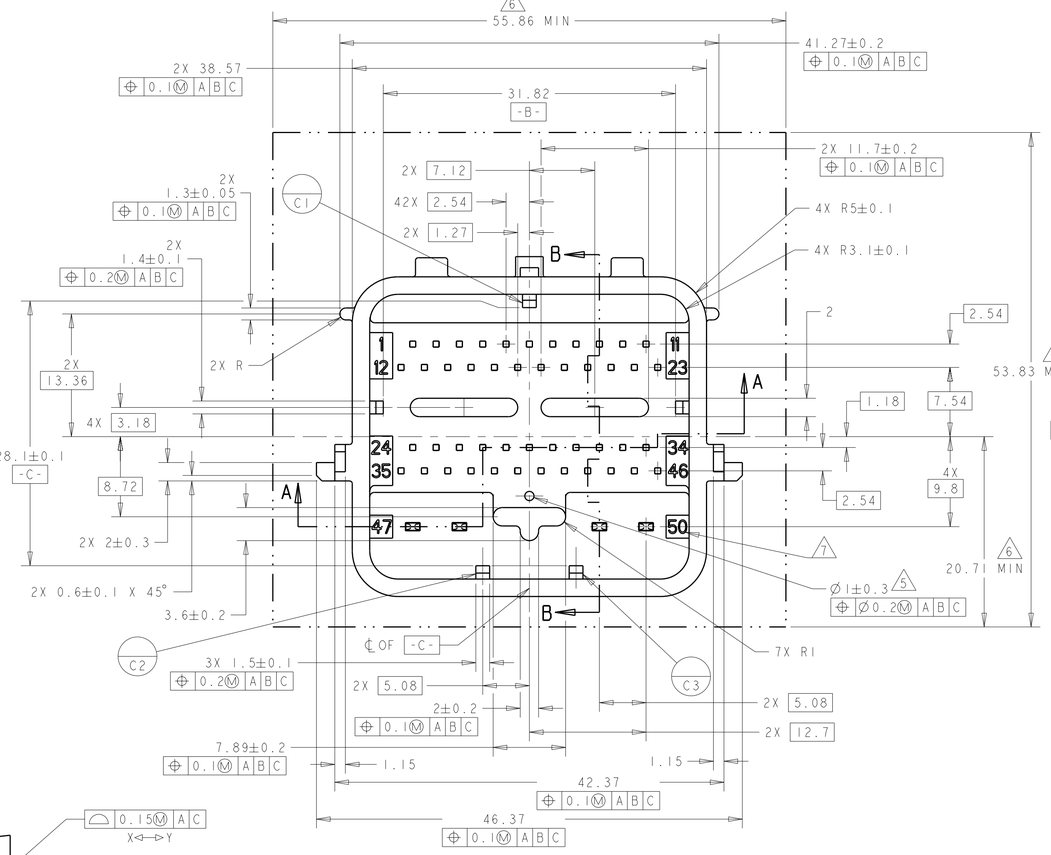

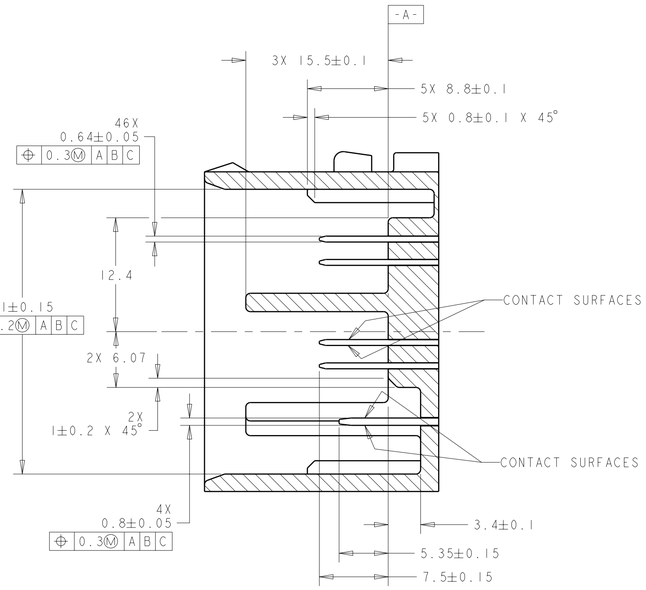

SECTION B-B

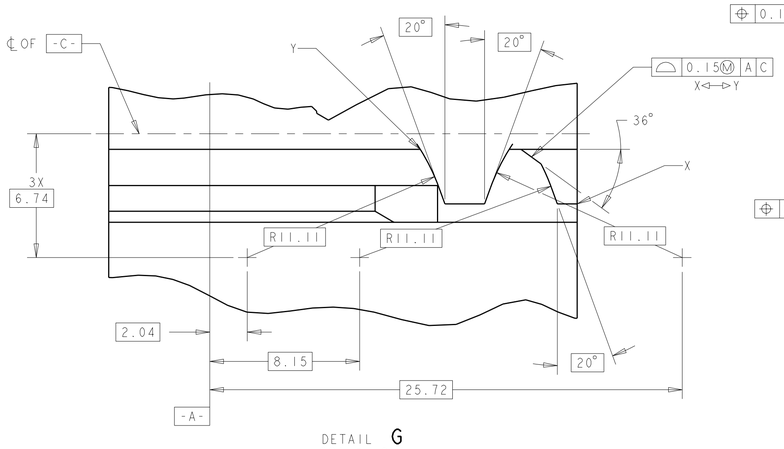

DETAIL G
SCALE 6:1
2 PLC

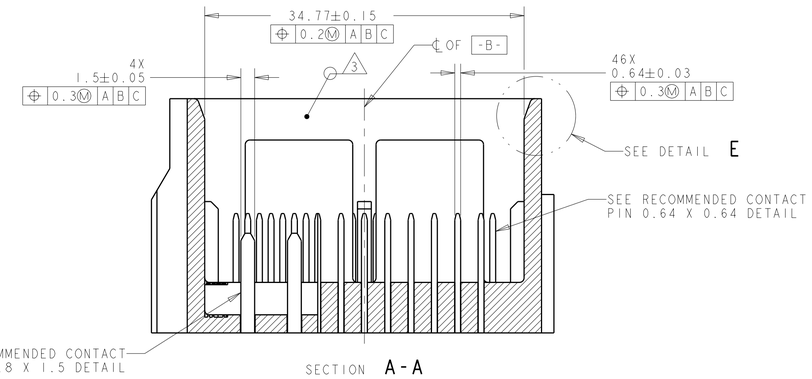

SECTION A-A

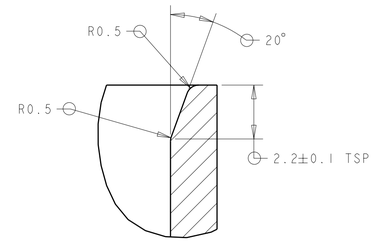

DETAIL E
SCALE 8:1

THIS DRAWING IS A CONTROLLED DOCUMENT FOR TYCO ELECTRONICS CORPORATION. IT IS SUBJECT TO CHANGE. CONTACT THE TYCO ELECTRONICS ORGANIZATION SHOULD BE CONTACTED FOR THE LATEST REVISION.

DIMENSIONS: mm

TOLERANCES UNLESS OTHERWISE SPECIFIED:
0 PLC ±-
1 PLC ±0.3
2 PLC ±0.10
3 PLC ±-
4 PLC ±-
ANGLES ±1°

MATERIAL -
FINISH -

DWN	B. CRISAMORE	21JUL2004
CHK	M. HITCHCOCK	21JUL2004
APVD	C. MARTIN	21JUL2004

PRODUCT SPEC -
APPLICATION SPEC -
WEIGHT -

Tyco Electronics
Tyco Electronics
Harrisburg, PA 17105-3608

NAME
PCM
50-WAY HARNESS ASSEMBLY
KEY C

SIZE	CAGE CODE	DRAWING NO	RESTRICTED TO
A1	00779	C-1438693	-

CUSTOMER DRAWING | SCALE 2:1 | SHEET 2 OF 4 | REV A1

KEYING OPTION C			48	47	46	45	44	43	42	41		39	38	37	36	35		33	32	31	30	29	28		26	25	24	23	22	21	20	19	18				14	13	12			9	8	7		5	4	3		1	3-1438693-2
			48			45	44	43	42	41		39	38	37	36	35		33	32	31	30	29	28		26	25	24	23	22	21	20	19	18				14	13	12			9	8	7		5	4	3		1	3-1438693-1
			48	47	46	45	44	43	42	41		39	38	37	36	35		33	32	31	30	29	28		26	25	24	23	22	21	20	19	18				14	13	12		10	9	8			5	4	3		1	3-1438693-0
			48	47	46	45	44	43		41		39	38	37	36	35		33	32	31	30	29			26				22	21	20	19	18				14	13	12		10	9				5	4			1	2-1438693-9
			48	47	46	45	44	43		41		39	38	37	36	35		33	32	31	30	29			26				22	21	20	19	18				14	13	12			9		7		5	4			1	2-1438693-8
			48	47	46	45	44	43	42	41		39	38	37	36	35		33	32	31	30	29			26				22	21	20	19	18				14	13	12			9	8			5	4	3		1	2-1438693-7
			48	47	46	45	44	43	42	41		39	38	37	36	35		33	32	31	30	29	28		26				22	21	20	19	18				14	13	12			9	8	7		5	4	3		1	2-1438693-6
		49	48			45	44	43	42	41		39	38	37	36	35		33	32	31	30	29	28		26				22	21	20	19	18				14	13	12		10	9	8			5	4	3		1	2-1438693-5
			48			45	44	43	42	41		39	38	37	36	35		33	32	31	30	29	28		26				22	21	20	19	18				14	13	12			9	8	7		5	4	3		1	2-1438693-4
			48	47	46	45	44	43	42	41		39	38	37	36	35		33	32	31	30	29	28		26				22	21	20	19	18				14	13	12		10	9	8	7		5	4	3		1	2-1438693-3
		49	48	47	46	45	44	43	42	41		39	38	37	36	35		33	32	31	30	29	28		26				22	21	20	19	18				14	13	12		10	9	8			5	4	3		1	2-1438693-2
			48	47	46	45	44	43				39	38	37	36	35		33	32	31	30	29			26	25	24	23	22	21	20	19	18				14	13	12		10	9				5				1	2-1438693-1
			48	47	46	45	44	43				39	38	37	36	35		33	32	31	30	29			26	25	24	23	22	21	20	19	18				14	13	12			9		7		5				1	2-1438693-0
			48	47	46	45	44	43	42	41		39	38	37	36	35		33	32	31	30	29			26	25	24	23	22	21	20	19	18				14	13	12		10	9	8			5	4			1	1-1438693-9
			48	47	46	45	44	43	42	41		39	38	37	36	35		33	32	31	30	29			26	25	24	23	22	21	20	19	18				14	13	12			9	8	7		5	4			1	1-1438693-8
			48	47	46	45	44	43				39	38	37	36	35		33	32	31	30	29			26				22	21	20	19	18				14	13	12		10	9				5				1	1-1438693-7
			48	47	46	45	44	43				39	38	37	36	35		33	32	31	30	29			26				22	21	20	19	18				14	13	12			9		7		5				1	1-1438693-6
			48	47	46	45	44	43	42	41		39	38	37	36	35		33	32	31	30	29			26				22	21	20	19	18				14	13	12		10	9	8			5	4			1	1-1438693-5
			48	47	46	45	44	43	42	41		39	38	37	36	35		33	32	31	30	29			26				22	21	20	19	18				14	13	12			9	8	7		5	4			1	1-1438693-4
			48	47	46	45	44	43	42	41		39	38	37	36	35		33	32	31	30	29			26		24	23	22	21	20	19	18				14	13	12			9	8	7	6	5	4	3		1	1-1438693-3
			48	47	46	45	44	43	42	41		39	38	37	36	35		33	32	31	30	29			26		24	23	22	21	20	19	18				14	13	12		10	9	8		6	5	4	3		1	1-1438693-2
			48	47	46	45	44	43	42	41		39	38	37	36	35		33	32	31	30	29			26				22	21	20	19	18				14	13	12		10	9	8	7		5	4	3		1	1-1438693-1
			48			45	44	43	42	41		39	38	37	36	35		33	32	31	30	29			26		24	23	22	21	20	19	18				14	13	12		10	9	8		6	5	4	3		1	1-1438693-0
			48	47	46	45	44	43	42	41		39	38	37	36	35		33	32	31	30	29			26	25	24	23	22	21	20	19	18				14	13	12			9	8	7		5	4	3		1	1438693-9
			48			45	44	43	42	41		39	38	37	36	35		33	32	31	30	29			26	25	24	23	22	21	20	19	18				14	13	12			9	8	7		5	4	3		1	1438693-8
			48			45	44	43	42	41		39	38	37	36	35		33	32	31	30	29			26	25	24	23	22	21	20	19	18				14	13	12		10	9	8			5	4	3		1	1438693-7
			48	47	46	45	44	43	42	41		39	38	37	36	35		33	32	31	30	29			26	25	24	23	22	21	20	19	18				14	13	12		10	9	8			5	4	3		1	1438693-6
		49	48			45	44	43	42	41		39	38	37	36	35		33	32	31	30	29			26				22	21	20	19	18				14	13	12		10	9	8			5	4	3		1	1438693-5
CAVITIES WITH A NUMERIC SYMBOL INDICATES CLOSED TERMINAL LOCATIONS			48			45	44	43	42	41		39	38	37	36	35		33	32	31	30	29			26				22	21	20	19	18				14	13	12			9	8	7		5	4	3		1	1438693-4
			48	47	46	45	44	43	42	41		39	38	37	36	35		33	32	31	30	29			26				22	21	20	19	18				14	13	12			9	8	7		5	4	3		1	1438693-3
BLANK CAVITIES INDICATES OPEN TERMINAL HOLE LOCATIONS		49	48	47	46	45	44	43	42	41		39	38	37	36	35		33	32	31	30	29			26				22	21	20	19	18				14	13	12		10	9	8			5	4	3		1	1438693-2
																																																			1438693-1
TERMINAL HOLE POSITION	50	49	48	47	46	45	44	43	42	41	40	39	38	37	36	35	34	33	32	31	30	29	28	27	26	25	24	23	22	21	20	19	18	17	16	15	14	13	12	11	10	9	8	7	6	5	4	3	2	1	ASSEMBLY PART NUMBER

PIN-OUT CHART

LOC	DIST
FX	00

REVISIONS					
P	LTR	DESCRIPTION	DATE	DWN	APVD
	-	SEE SHEET 1	-	-	-

DWN B. CRISAMORE 21JUL2004
CHK M. HITCHCOCK 21JUL2004
APVD C. MARTIN 21JUL2004

Tyco Electronics
Harrisburg, PA 17105-3608

NAME: PCM 50-WAY HARNESS ASSEMBLY KEY C

DIMENSIONS: mm

TOLERANCES UNLESS OTHERWISE SPECIFIED:
0 PLC ±-
1 PLC ±0.3
2 PLC ±0.10
3 PLC ±-
4 PLC ±-
ANGLES ±1°

MATERIAL: -
FINISH: -
PRODUCT SPEC: -
APPLICATION SPEC: -
WEIGHT: -

SIZE A1 | CAGE CODE 00779 | DRAWING NO C-1438693 | RESTRICTED TO -
SCALE 2:1 | SHEET 3 OF 4 | REV A11

CUSTOMER DRAWING

THIS DRAWING IS UNPUBLISHED. RELEASED FOR PUBLICATION 20
© COPYRIGHT 20 BY TYCO ELECTRONICS CORPORATION. ALL RIGHTS RESERVED.
THIS DRAWING IS A CONTROLLED DOCUMENT FOR TYCO ELECTRONICS CORPORATION. IT IS SUBJECT TO CHANGE AND THE CONTROLLING ENGINEERING ORGANIZATION SHOULD BE CONTACTED FOR THE LATEST REVISION.

8 7 6 5 4 3 2 1

THIS DRAWING IS UNPUBLISHED. RELEASED FOR PUBLICATION 20
© COPYRIGHT 20 BY TYCO ELECTRONICS CORPORATION. ALL RIGHTS RESERVED.

LOC	DIST
FX	00

REVISIONS					
P	LTR	DESCRIPTION	DATE	DWN	APVD
	-	SEE SHEET 1	-	-	-

KEYING OPTION C			48	47	46	45	44	43				39	38	37	36	35		33	32	31	30	29			26				22	21	20	19	18				14	13	12		10	9			6	5				1	4-1438693-6
			48	47	46	45	44	43				39	38	37	36	35		33	32	31	30	29			26				22	21	20	19	18				14	13	12			9		7	6	5				1	4-1438693-5
			48	47	46	45	44	43	42	41		39	38	37	36	35		33	32	31	30	29			26				22	21	20	19	18				14	13	12		10	9	8		6	5	4			1	4-1438693-4
			48	47	46	45	44	43	42	41		39	38	37	36	35		33	32	31	30	29			26				22	21	20	19	18				14	13	12			9	8	7	6	5	4			1	4-1438693-3
			48	47	46	45	44	43	42	41		39	38	37	36	35		33	32	31	30	29	28		26				22	21	20	19	18				14	13	12			9	8	7	6	5	4	3		1	4-1438693-2
			48	47	46	45	44	43	42	41		39	38	37	36	35		33	32	31	30	29			26				22	21	20	19	18				14	13	12			9	8	7	6	5	4	3		1	4-1438693-1
		49	48	47	46	45	44	43	42	41		39	38	37	36	35		33	32	31	30	29			26				22	21	20	19	18				14	13	12		10	9	8		6	5	4	3		1	4-1438693-0
		49	48	47	46	45	44	43	42	41		39	38	37	36	35		33	32	31	30	29	28		26				22	21	20	19	18				14	13	12		10	9	8		6	5	4	3		1	3-1438693-9
			48	47	46	45	44	43	42			39	38	37	36	35		33	32			29	28		26				22	21	20	19	18				14	13	12		10	9	8	7		5	4	3		1	3-1438693-8
			48	47	46	45	44	43	42			39	38	37	36	35		33	32			29	28		26	25	24	23	22	21	20	19	18				14	13	12		10	9	8	7		5	4	3		1	3-1438693-7
CAVITIES WITH A NUMERIC SYMBOL INDICATES CLOSED TERMINAL LOCATIONS			48	47	46	45	44	43	42			39	38	37	36	35		33	32			29	28		26	25	24	23	22	21	20	19	18				14	13	12			9	8	7		5	4	3		1	3-1438693-6
			48	47	46	45	44	43	42	41		39	38	37	36	35		33	32	31	30	29	28		26	25	24	23	22	21	20	19	18				14	13	12		10	9	8	7		5	4	3		1	3-1438693-5
BLANK CAVITIES INDICATES OPEN TERMINAL HOLE LOCATIONS			48		46	45	44		42		40	39	38	37	36	35	34	33	32	31	30	29	28	27	26	25	24	23		21	20	19	18			15	14			11		9		7	6	5	4	3		1	3-1438693-4
			48			45	44	43	42	41		39	38	37	36	35		33	32	31	30	29	28		26	25	24	23	22	21	20	19	18				14	13	12		10	9	8			5	4	3		1	3-1438693-3
TERMINAL HOLE POSITION	50	49	48	47	46	45	44	43	42	41	40	39	38	37	36	35	34	33	32	31	30	29	28	27	26	25	24	23	22	21	20	19	18	17	16	15	14	13	12	11	10	9	8	7	6	5	4	3	2	1	ASSEMBLY PART NUMBER

PIN-OUT CHART

THIS DRAWING IS A CONTROLLED DOCUMENT FOR TYCO ELECTRONICS CORPORATION
IT IS SUBJECT TO CHANGE AND THE CONTROLLING ENGINEERING ORGANIZATION SHOULD BE CONTACTED FOR THE LATEST REVISION.

DIMENSIONS: mm

TOLERANCES UNLESS OTHERWISE SPECIFIED:
0 PLC ±-
1 PLC ±0.3
2 PLC ±0.10
3 PLC ±-
4 PLC ±-
ANGLES ±1°

MATERIAL -
FINISH -

DWN B. CRISAMORE 21JUL2004
CHK M. HITCHCOCK 21JUL2004
APVD C. MARTIN 21JUL2004
PRODUCT SPEC -
APPLICATION SPEC -
WEIGHT -

Tyco Electronics
Tyco Electronics
Harrisburg, PA 17105-3608

NAME
PCM
50-WAY HARNESS ASSEMBLY
KEY C

SIZE A1 | CAGE CODE 00779 | DRAWING NO C-1438693 | RESTRICTED TO -

CUSTOMER DRAWING | SCALE 2:1 | SHEET 4 OF 4 | REV A11

Mouser Electronics

Authorized Distributor

Click to View Pricing, Inventory, Delivery & Lifecycle Information:

TE Connectivity:
1438693-3