Description	Material	Finish
Body	Brass	Nickel
Pin	BE CU	Gold
Insulation	PTFE	N/A
Heat Shrink	Polyolefin	Black

REVISIONS			
REV	DESCRIPTION	DATE	APPV
B	Revised RP-SMA connector	10/29/09	CJ
C	Added new title block	12-JUL-12	BPM

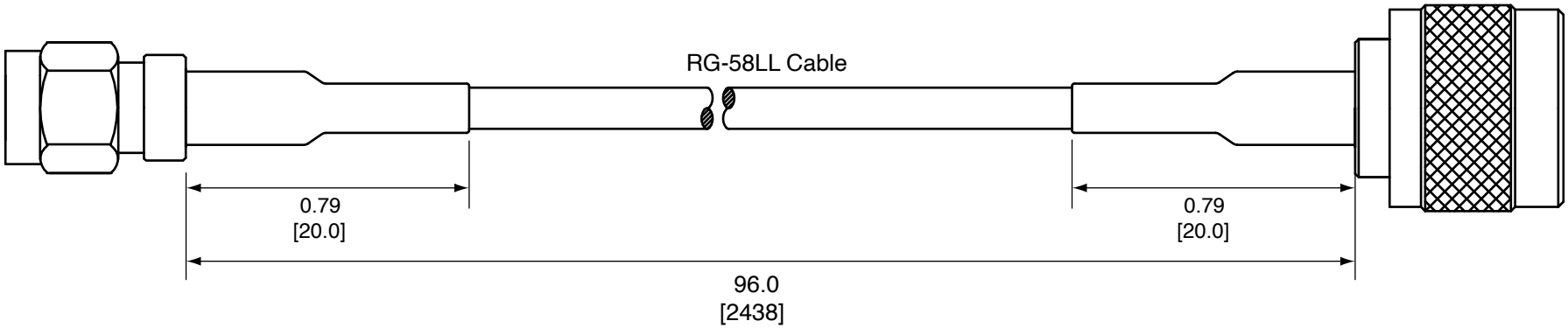

NOTES: (UNLESS OTHERWISE SPECIFIED)

1. ALL DIMENSIONS ARE IN INCHES [mm].
2. DIMENSIONS APPLY AFTER FINISHING.
3. MANUFACTURE TO BE COMPLIANT WITH EU RoHS DIRECTIVE.
4. SAFETY BREAK ALL SHARP CORNERS AND EDGES .02 MAXIMUM.

WARNING: THIS DRAWING CONTAINS PROPRIETARY INFORMATION THAT IS THE SOLE PROPERTY OF LINX TECHNOLOGIES, AND SHALL BE TREATED AS SUCH. NO DISCLOSURE OR REPRODUCTION OF THIS DOCUMENT IS PERMITTED, IN WHOLE OR IN PART, WITHOUT THE EXPRESS WRITTEN PERMISSION OF LINX TECHNOLOGIES OR ITS DESIGNATED AGENTS.

TE connectivity

TITLE:

RPSMA MALE TO N MALE
WITH 8' OF RG58 LOW LOSS CABLE

MATERIAL:

TOLERANCES:
.020 [0.50]-.200 [5.00]= ±.008 [0.20]
.200 [5.00]-1.200 [30.00]= ±.016 [0.40]
1.20 [30.0]-4.75 [120.0]= ±.024 [0.60]
4.75 [120.0]-12.40 [315.0]= ±.040 [1.0]

PROJECTION:

ANGLES: ±1°

FINISH:

DRAWN: CJ DT: 10/29/09

ENGR: DT:

SIZE A | DWG. NO. C58LL-RPSM-2438-NM | REV C

SCALE: 2:1 | DO NOT SCALE DRAWING | SHEET 1 OF 1

©2023 TE Connectivity. All Rights Reserved.

LDCFDLT_A

Mouser Electronics

Authorized Distributor

Click to View Pricing, Inventory, Delivery & Lifecycle Information:

TE Connectivity:
C58LL-RPSM-2438-NM