© – TE Connectivity. All Rights Reserved.

REVISIONS					
P	LTR	DESCRIPTION	DATE	DWN	APVD
	P1	REVISED PER ECN-23-220565	07JUL2023	RK	MF

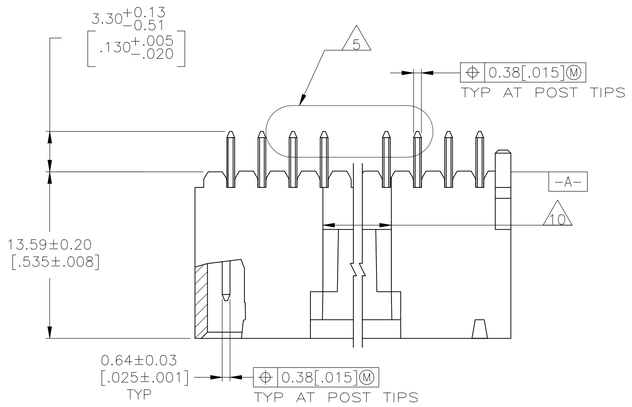

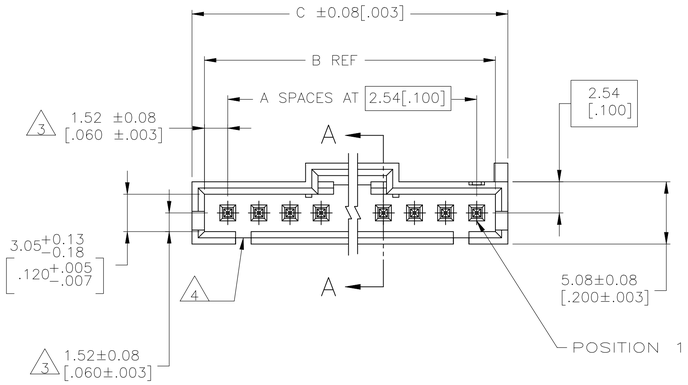

DETAIL Z
POST DETAIL TYP
2 POST MINIMUM

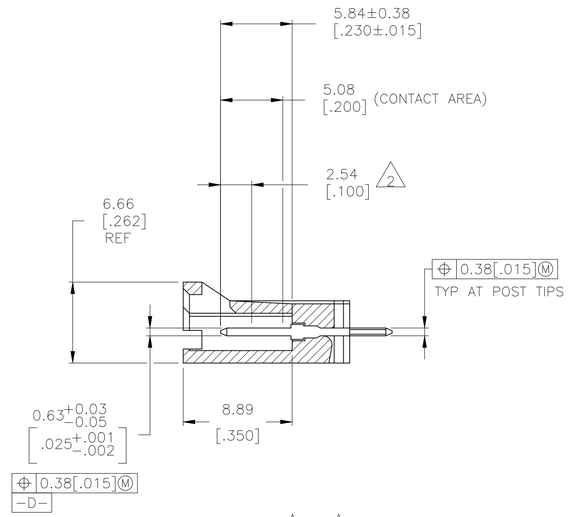

SECTION A–A

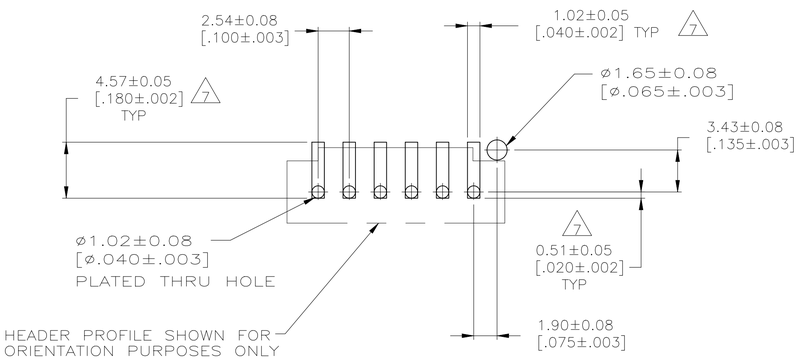

RECOMMENDED PC BOARD MOUNTING DIMENSIONS
RECOMMENDED STENCIL THICKNESS = 0.25[.010]

1. FINISH: .00038[.000015] GOLD IN THE CONTACT AREA, .00254[.000100] MATTE TIN–LEAD ON REMAINDER OF CONTACT, ALL OVER .00127[.000050] NICKEL.
2. POINT OF MEASUREMENT FOR PLATING THICKNESS.
3. THE NOTED DIMENSIONS APPLY FROM THE BASIC DIMENSION CENTER LINE (NOT THE POST CENTER LINE) TO THE SURFACE INDICATED.
4. ONE POLARIZATION SLOT FOR 2 AND 3 POSITION ASSEMBLIES ONLY.
5. SELECT POST TAILS FORMED TO PROVIDE CONNECTOR HOLD DOWN UNTIL SOLDERED, CONFIGURATION ACCEPTS 0.69[.027]–2.03[.080] THICK PRINTED CIRCUIT BOARD. (SEE DETAIL Z).
6. PARTS ARE PACKAGED IN GANG OF TUBES.
7. DIMENSIONS NOTED ARE FOR SOLDER STENCIL LAYOUT FOR USE WITH 1.58±0.20[.062±.008] THICK PRINTED CIRCUIT BOARDS.
8. MATERAIL– HOUSING: LCP, COLOR–BLACK.
   POSTS: BRASS.
9. FINISH: .00038[.000015] GOLD IN THE CONTACT AREA, .00254[.000100] MATTE TIN ON REMAINDER OF CONTACT, ALL OVER .00127[.000050] NICKEL.
10. 0.25 [.010] RECESS PERMISSIBLE IN THIS AREA FOR MOLD SHUT OFF

PLATING	C	B	A	NO. OF POSN	PART NO.
9	32.89 [1.295]	30.99 [1.220]	11	12	6–104809–1
9	30.35 [1.195]	28.45 [1.120]	10	11	6–104809–0
9	27.81 [1.095]	25.91 [1.020]	9	10	5–104809–9
9	25.27 [.995]	23.37 [.920]	8	9	5–104809–8
9	22.73 [.895]	20.83 [.820]	7	8	5–104809–7
9	20.19 [.795]	18.29 [.720]	6	7	5–104809–6
9	17.65 [.695]	15.75 [.620]	5	6	5–104809–5
9	15.11 [.595]	13.21 [.520]	4	5	5–104809–4
9	12.57 [.495]	10.67 [.420]	3	4	5–104809–3
9	10.03 [.395]	8.13 [.320]	2	3	5–104809–2
9	7.49 [.295]	5.59 [.220]	1	2	5–104809–1
1	32.89 [1.295]	30.99 [1.220]	11	12	1–104809–1
1	30.35 [1.195]	28.45 [1.120]	10	11	1–104809–0
1	27.81 [1.095]	25.91 [1.020]	9	10	104809–9
1	25.27 [.995]	23.37 [.920]	8	9	104809–8
1	22.73 [.895]	20.83 [.820]	7	8	104809–7
1	20.19 [.795]	18.29 [.720]	6	7	104809–6
1	17.65 [.695]	15.75 [.620]	5	6	104809–5
1	15.11 [.595]	13.21 [.520]	4	5	104809–4
1	12.57 [.495]	10.67 [.420]	3	4	104809–3
1	10.03 [.395]	8.13 [.320]	2	3	104809–2
1	7.49 [.295]	5.59 [.220]	1	2	104809–1

THIS DRAWING IS A CONTROLLED DOCUMENT.

DIMENSIONS: mm [INCHES]

TOLERANCES UNLESS OTHERWISE SPECIFIED:
0 PLC ± –
1 PLC ± –
2 PLC ± 0.13[.005]
3 PLC ± –
4 PLC ± –
ANGLES ± –

MATERIAL: SEE NOTE 8
FINISH: SEE TABLE

DWN R BROWN 09FEB01
CHK K WRIGHT 09FEB01
APVD K WRIGHT 09FEB01
PRODUCT SPEC —
APPLICATION SPEC —
WEIGHT 0.000000
CUSTOMER DRAWING

TE Connectivity

NAME: PLZD HDR ASSY, AMPMODU MTE, VERTICAL SINGLE ROW, 2.54[.100] CL, 0.64[.025] SQ POSTS, WITH LATCHING & HOLD DOWN

SIZE	CAGE CODE	DRAWING NO	RESTRICTED TO
A1	00779	C–104809	—

SCALE 4:1 | SHEET 1 OF 1 | REV P1

4805 (1/15)

Mouser Electronics

Authorized Distributor

Click to View Pricing, Inventory, Delivery & Lifecycle Information:

TE Connectivity:

1-104809-1