© 2019 TE Connectivity. All Rights Reserved.

POS. PER ROW 'N'	L	PART NUMBER	
2	5.08	829264-2	
3	7.62	-3	
4	10.16	-4	
5	12.70	-5	
6	15.24	-6	
7	17.78	-7	
8	20.32	-8	
9	22.86	-9	
10	25.40	1- -0	
11	27.94	1- -1	
12	30.48	1- -2	
13	33.02	1- -3	
14	35.56	1- -4	OBSOLETE
15	38.10	1- -5	
16	40.64	1- -6	
17	43.18	1- -7	
18	45.72	1- -8	
19	48.26	1- -9	
20	50.80	2- -0	OBSOLETE
21	53.34	2- -1	OBSOLETE 8
22	55.88	2- -2	
23	58.42	2- -3	
24	60.96	2- -4	OBSOLETE
25	63.50	2- -5	
26	66.04	2- -6	
27	68.58	2- -7	OBSOLETE 8
28	71.12	2- -8	OBSOLETE
29	73.66	2- -9	8
30	76.2	3- -0	
31	78.74	3- -1	OBSOLETE
32	81.28	3- -2	
33	83.82	3- -3	8
34	86.36	3- -4	
35	88.90	3- -5	OBSOLETE
36	91.44	3-829264-6	OBSOLETE

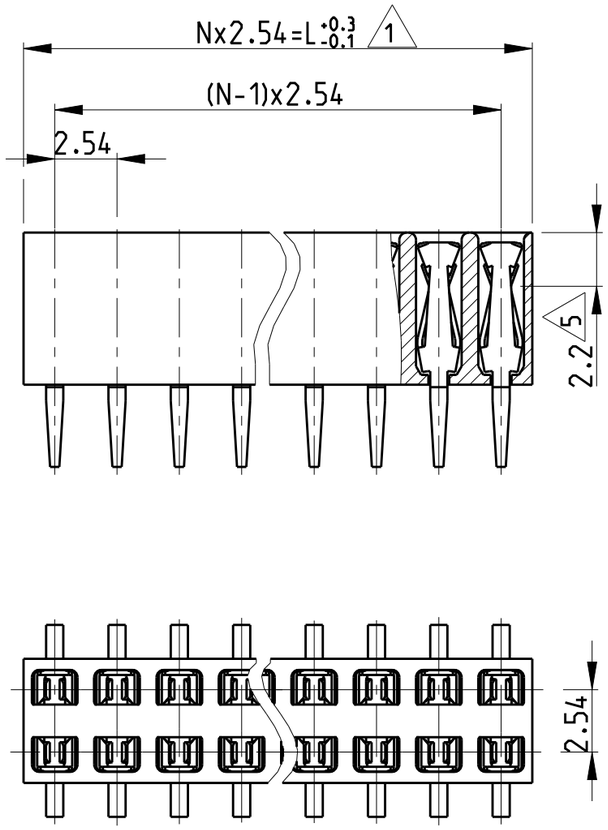

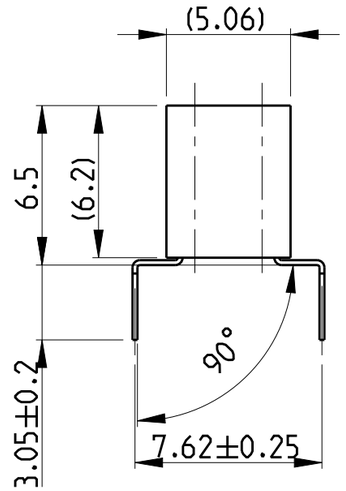

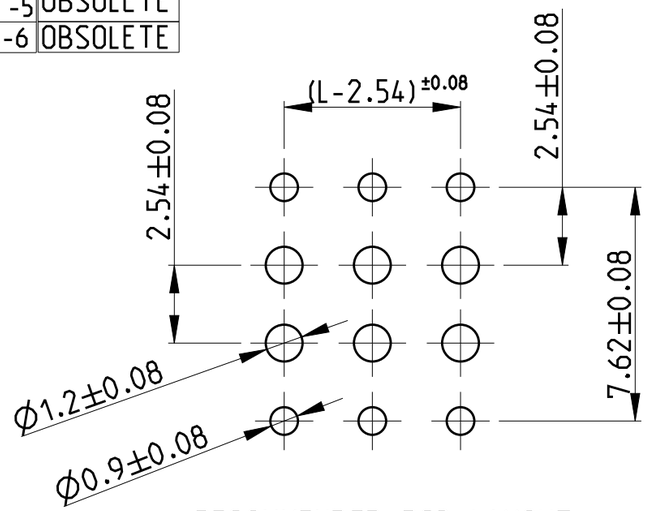

RECOMMENDED PCB LAYOUT

REVISIONS

P	LTR	DESCRIPTION	DATE	DWN	APVD
	E	PLASTIC MATERIAL SUPPLIER CHANGE	22MAR2019	SS	PS

NOTES:

1. TO DETERMINE DIMENSIONS TAKE 2xN = NR. OF POS.
   FOR EXAMPLE: 2x10 POS; N x 2.54= 25.4mm
   FOR ORDER NO: USE BASIC - NR. + NR. OF POS.
   FOR EXAMPLE: 2x2POS. = 829264-2 (SHORTEST VERSION)
   2x36POS. =3-829264-6 (LONGEST VERSION)
2. HOUSING MATERIAL: PBT GREEN GLASS FILLED, UL 94V-0
   CONTACT MATERIAL: PHOSPHOR BRONZE
3. PLATING: UNDER COATING: 1.3 µm Ni
   AT CONT. PLACE: 0.8 µm Au
   AT SOLDER-TYNES: 3.0-5.0 µm Sn
4. MATES WITH 0.63 SQUARE/ROUND MODU POSTS
5. CONTACT POINT
6. RECOMMENDED PC BOARD THICKNESS: 1.6mm
7. HV100 CONNECTOR PACKED IN ANTI-STATIC BLISTER TRAY
8. OBSOLETE PARTS: OBSOLEET CIS STREAMLINING PER D.RENAUD/D.SINISI

THIS DRAWING IS A CONTROLLED DOCUMENT.

DIMENSIONS: mm

TOLERANCES UNLESS OTHERWISE SPECIFIED: ±0.15
0 PLC ±-
1 PLC ±-
2 PLC ±-
3 PLC ±-
4 PLC ±-
ANGLES ±3°

MATERIAL 2

FINISH 3

DWN A.HO 26MAY1988
CHK M.SCHAARSCHMIDT 06DEC1990
APVD -
PRODUCT SPEC 108-19056
APPLICATION SPEC -
WEIGHT -

TE Connectivity

NAME HV100 CONNECTOR VERTICAL, 6.2mm TOP ENTRY, DUAL ROW, GOLD
-

SIZE	CAGE CODE	DRAWING NO	RESTRICTED TO
A3	00779	C-829264	

CUSTOMER DRAWING

SCALE 4:1 SHEET 1 OF 1 REV E

1470-19 (3/13)

Mouser Electronics

Authorized Distributor

Click to View Pricing, Inventory, Delivery & Lifecycle Information:

TE Connectivity:

829264-6