THIS DRAWING IS UNPUBLISHED. RELEASED FOR PUBLICATION 20
© COPYRIGHT 20 BY - ALL RIGHTS RESERVED.

REVISIONS

P	LTR	DESCRIPTION	DATE	DWN	APVD
	A	INITIAL RELEASE	18JAN2016	N.P	X.X
	A1	PER ECR-16-010253	21JUL2016	N.P	X.X
	A2	ECR-20-011067 TYPE MODIFY	05AUG2020	S.C	C.W

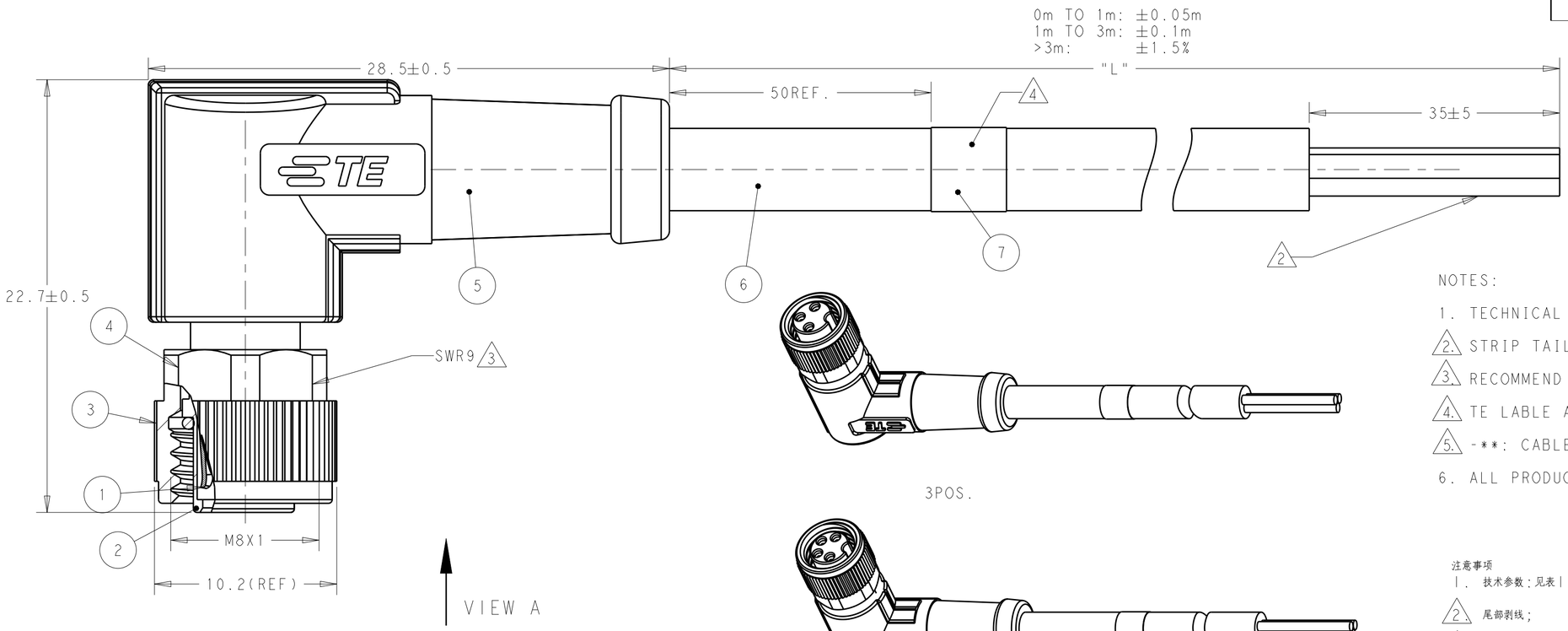

3POS.

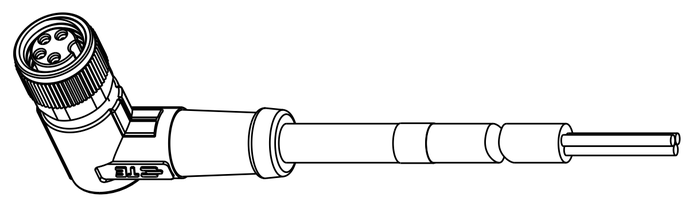

4POS.

NOTES:

1. TECHNICAL DATA: SEE TABLE 1
2. STRIP TAIL
3. RECOMMEND TORQUE 0.4Nm
4. TE LABLE AREA.
5. -**: CABLE LENGHT.-0.5:0.5m, -1.0:1.0m, -1.5:1.5m...
6. ALL PRODUCT MUST COMPLIANCE WITH ROHS AND REACH.

注意事项

1. 技术参数:见表1
2. 尾部剥线;
3. 推荐扭矩0.4Nm;
4. TE 标签位置;
5. -**线长:-0.5:0.5m,-1.0:1.0m,-1.5:1.5m
6. 产品必须符合ROHS与REACH.

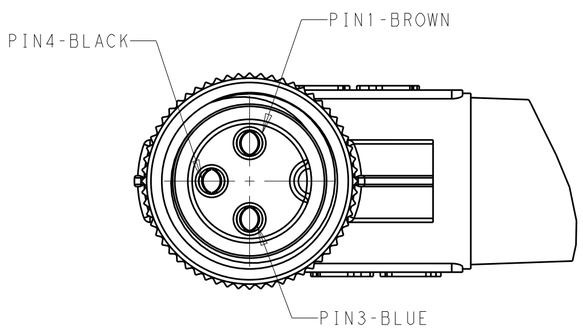

VIEW A
3POS.

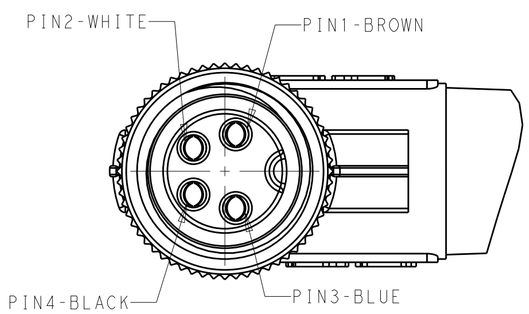

VIEW A
4POS.

-	-	TE LABLE	7
-	-	CABLE	6
BLUE COLOR	POLYURETHANE	OVER-MOLDING	5
-	COPPER ALLOY	COUPLING NUT	4
	RUBBER	O-RING	3
BALCK COLOR	PA66	HOUSING	2
GOLD FLASH	COPPER ALLOY	CONTACT	1
COMMENTS	MATERIAL	DESCRIPITON	ITEM

CABLE CHARACTERISTIC	LENGTH "L"	CABLE TEMP. RANGE	JACKET COLOR	JACKET MATERIAL	A2 TYPE	POS.	PART NUMBER
WIRES: 0.25mm² (24AWG)	STANDARD: -001: 0.5m -002: 1.0m -003: 1.5m -004: 3.0m -005: 5.0m -006: 7.0m -007: 10.0m CUSTOMIZATION: -**0:**.0m -**1:**.5m	FIXED: -40°C~80°C FLXIBLE: -25°C~80°C	GRAY	PUR (UL)	RPC-M8-FR-4CON-PUR-**5	4	T4051420004-00X
					RPC-M8-FR-3CON-PUR-**5	3	T4051420003-00X
		FIXED: -10°C~80°C FLXIBLE: -5°C~80°C	BLACK	PVC (UL)	RPC-M8-FR-4CON-PVC-**5	4	T4051410004-00X
					RPC-M8-FR-3CON-PVC-**5	3	T4051410003-00X

TABLE 1

TECHNICAL DATA	T40514X0003-00X	T40514X0004-00X
RATED VOLTAGE	60V	30V
RATED CURRENT	3A	
POLLETION DEGREE	3	
OVERVOLTAGE CATEGORY	II	
MATERIAL GROUP	II	
DEGREE OF PROTECTION	IP67	

THIS DRAWING IS A CONTROLLED DOCUMENT.

DIMENSIONS: mm

TOLERANCES UNLESS OTHERWISE SPECIFIED:
0 PLC ±-
1 PLC ±0.35
2 PLC ±0.25
3 PLC ±
4 PLC ±
ANGLES ±-

MATERIAL: TBD
FINISH: -

DWN 09DEC2015 Nick Pan
CHK 09DEC2015 Kobby Zhao
APVD 09DEC2015 Xiang Xu
PRODUCT SPEC 108-106140
APPLICATION SPEC -
WEIGHT -

TE Connectivity

NAME: M8 CABLE ASSEMBLY SINGLE ENDED FEMALE SIDE, UNSHIELDED
-

SIZE	CAGE CODE	DRAWING NO	RESTRICTED TO
A2	-	C-T40514X000X00X	-

CUSTOMER DRAWING | SCALE 1:1 | SHEET 1 OF 1 | REV A2

1471-9 (3/13)

Mouser Electronics

Authorized Distributor

Click to View Pricing, Inventory, Delivery & Lifecycle Information:

TE Connectivity:
T4051410004-004