THIS DRAWING IS UNPUBLISHED. RELEASED FOR PUBLICATION -,- .
© COPYRIGHT - By - ALL RIGHTS RESERVED.

REVISIONS

P	LTR	DESCRIPTION	DATE	DWN	APVD
	A1	ECR-14-015049	13OCT2014	GSK	BvH
	A2	ECR-15-000154	07JAN2015	GSK	BvH
	A3	ECR-16-003945	16MAR2016	GSK	BvH

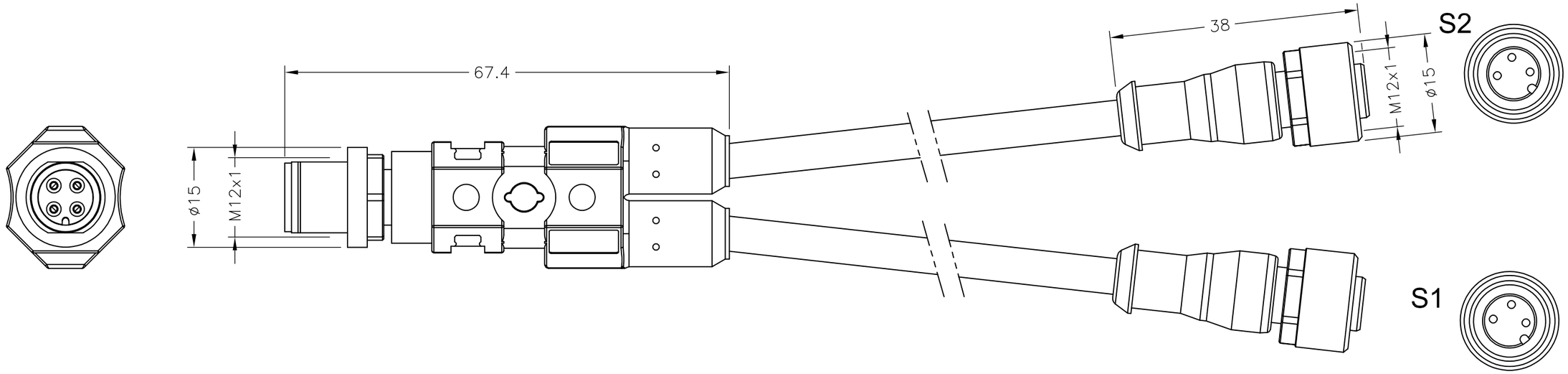

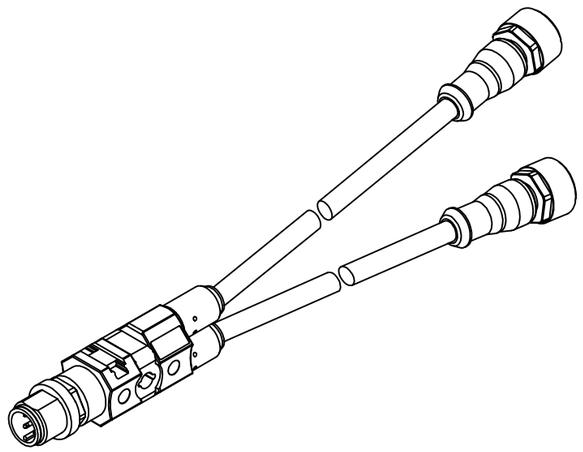

Contact Layout

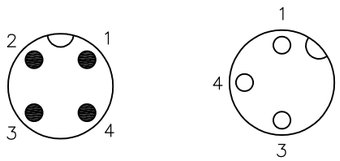

Schematic diagram

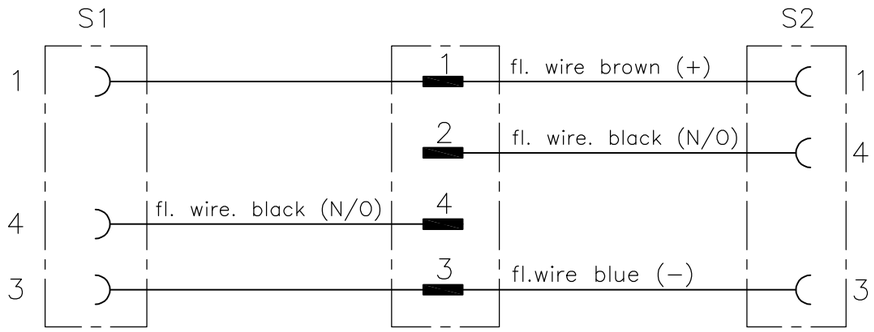

DESCRIPTION	TE PN
3 POS PVC 2,0M	1-2273107-5
3 POS PVC 1,5M	1-2273107-4
3 POS PVC 1,0M	1-2273107-3
3 POS PVC 0,6M	1-2273107-2
3 POS PVC 0,3M	1-2273107-1
3 POS PUR 2,0M	2273107-5
3 POS PUR 1,5M	2273107-4
3 POS PUR 1,0M	2273107-3
3 POS PUR 0,6M	2273107-2
3 POS PUR 0,3M	2273107-1

THIS DRAWING IS A CONTROLLED DOCUMENT.

DIMENSIONS: mm

TOLERANCES UNLESS OTHERWISE SPECIFIED:
0 PLC ± -
1 PLC ± -
2 PLC ± -
3 PLC ± -
4 PLC ± -
ANGLES ± -

MATERIAL -
FINISH -

DWN 23AUG2013 SATHISH KUMAR .G
CHK 23AUG2013 B.VELDHOVEN
APVD 23AUG2013 A.VAN ZANDVOORT
PRODUCT SPEC 108-19483
APPLICATION SPEC 114-32127
WEIGHT

TE Connectivity

NAME M12 Y CONN MALE TO 2XM12 FEMALE A

SIZE A3 | CAGE CODE 00779 | DRAWING NO C-2273107 | RESTRICTED TO —

CUSTOMER DRAWING | SCALE NTS | SHEET 1 OF 1 | REV A3

1470-19 (1/15)

Mouser Electronics

Authorized Distributor

Click to View Pricing, Inventory, Delivery & Lifecycle Information:

TE Connectivity:

2273107-5