THIS DRAWING IS UNPUBLISHED. RELEASED FOR PUBLICATION – ,– .
© COPYRIGHT – By – ALL RIGHTS RESERVED.

LOC	DIST
H	—

REVISIONS

P	LTR	DESCRIPTION	DATE	DWN	APVD
	A	INITIAL RELEASE	15NOV2013	YC	BvH
	A1	ECR–14–011671	16AUG2014	GSK	BvH

NOTES:
Tolerances cable lengths:
0m to 0.5m +30mm
0.5m to 1.0m +50mm
1.0m to 3.0m +100mm
< 3.0m +1.5%

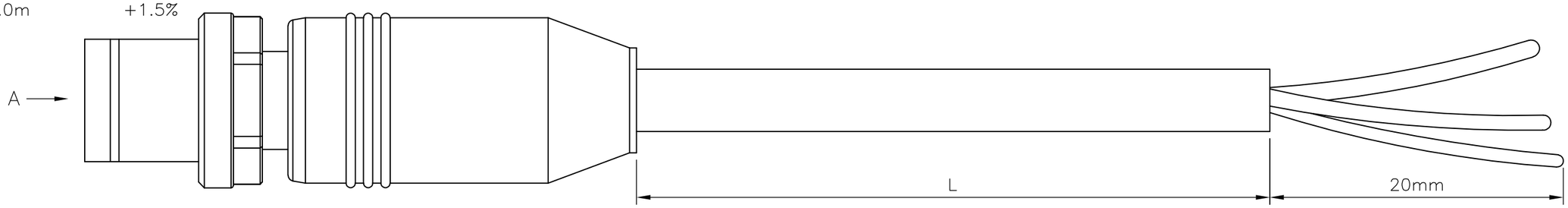

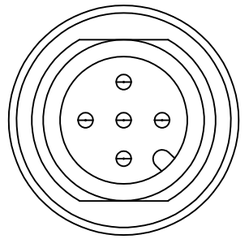

VIEW 'A'

TECHNICAL DATA	
Operating voltage	max. 60 V AC/DC
Operating current per contact	max. 4 A
Locking of ports	Screw thread M12 x 1 mm (recommended torque 0.6 Nm) self–securing
Protection	IP65 and IP67 when plugged and screwed down (EN 60529)

PUR CABLE	
No./diameter of wires	5 x 0.34 mm²
Wire isolation	PVC (br, wh, bl, bk, gnye)
C–track properties	
Jacket	PUR/PVC (UL/CSA)
Outer diameter	approx. 5.9 mm
Bend radius (moving)	15 x outer diameter
Temperature range (fixed)	–40...+80 °C
Temperature range (mobile)	–5...+70 °C

PVC CABLE	
No./diameter of wires	5 x 0.34 mm²
Wire isolation	PVC (br, wh, bl, bk, gnye)
C–track properties	
Jacket	PVC (UL/CSA)
Outer diameter	approx. 5.9 mm
Bend radius (moving)	15 x outer diameter
Temperature range (fixed)	–30...+80 °C
Temperature range (mobile)	–5...+70 °C

Contact Layout
Male

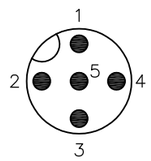

Schematic diagram

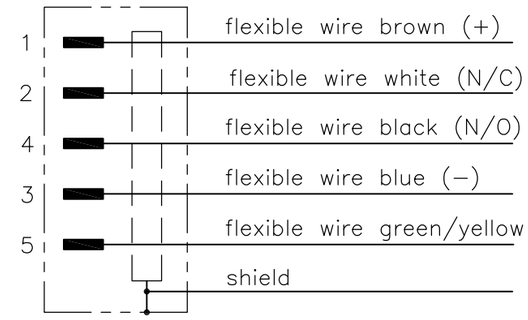

	LENGTH"L"	MATERIAL	JACKET COLOR	TE PN	DESCRIPTION	ITEM
5 pos	10mtr	PVC	GREY	1–2273046–4	5x22AWG PVC 10.0m	8
	5mtr			1–2273046–3	5x22AWG PVC 5.0m	7
	3mtr			1–2273046–2	5x22AWG PVC 3.0m	6
	1.5mtr			1–2273046–1	5x22AWG PVC 1.5m	5
5 pos	10mtr	PUR	GREY	2273046–4	5x22AWG PUR 10.0m	4
	5mtr			2273046–3	5x22AWG PUR 5.0m	3
	3mtr			2273046–2	5x22AWG PUR 3.0m	2
	1.5mtr			2273046–1	5x22AWG PUR 1.5m	1

THIS DRAWING IS A CONTROLLED DOCUMENT.

DIMENSIONS: mm

TOLERANCES UNLESS OTHERWISE SPECIFIED:
0 PLC ± –
1 PLC ± –
2 PLC ± –
3 PLC ± –
4 PLC ± –
ANGLES ± –

MATERIAL –
FINISH –

DWN YATHISH.C 15NOV2013
CHK B.VELDHOVEN 15NOV2013
APVD A.VAN ZANDVOORT 15NOV2013
PRODUCT SPEC 108–19483
APPLICATION SPEC 114–32127
WEIGHT –

TE Connectivity

NAME M12 X 1.0 STRAIGHT PLUG PIGT SHLD A

SIZE	CAGE CODE	DRAWING NO	RESTRICTED TO
A3	00779	C–2273046	—

CUSTOMER DRAWING
SCALE NTS
SHEET 1 OF 1
REV A1

Mouser Electronics

Authorized Distributor

Click to View Pricing, Inventory, Delivery & Lifecycle Information:

TE Connectivity:

1-2273046-1