THIS DRAWING IS UNPUBLISHED. RELEASED FOR PUBLICATION -,- .
© COPYRIGHT - By - ALL RIGHTS RESERVED.

NOTES:
Tolerances cable lengths:

0m to 0.5m	+30mm
0.5m to 1.0m	+50mm
1.0m to 3.0m	+100mm
< 3.0m	+1.5%

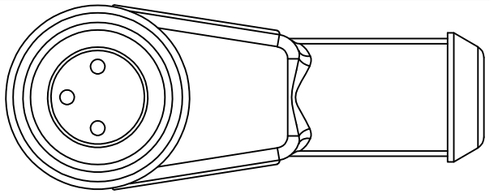

VIEW 'A'

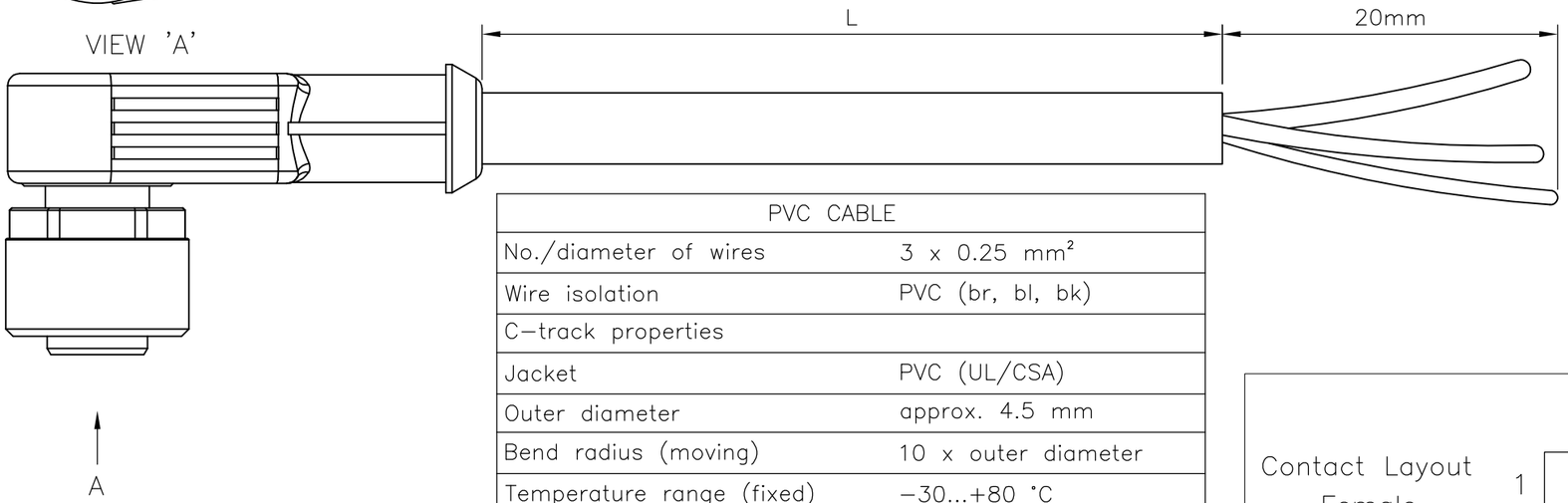

REVISIONS

P	LTR	DESCRIPTION	DATE	DWN	APVD
	A1	ECR-14-011671	14AUG2014	GSK	BvH
	A2	ECR-15-018018	11DEC2015	RK	BvH
	A3	ECR-16-003945	16MAR2016	GSK	BvH

PVC CABLE	
No./diameter of wires	3 x 0.25 mm²
Wire isolation	PVC (br, bl, bk)
C-track properties	
Jacket	PVC (UL/CSA)
Outer diameter	approx. 4.5 mm
Bend radius (moving)	10 x outer diameter
Temperature range (fixed)	-30...+80 °C
Temperature range (mobile)	-5...+80 °C

Schematic diagram

Contact Layout
Female

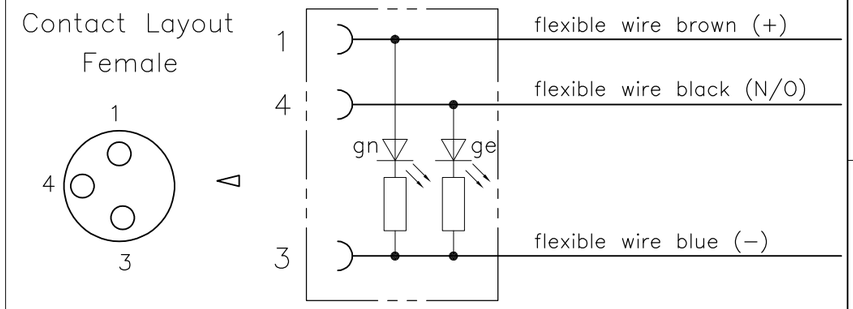

TECHNICAL DATA	
Operating voltage	24 V DC ±25 %
Operating current per contact	max. 4 A
Locking of ports	Screw thread M8 x 1 mm (recommended torque 0.4 Nm) self-securing
Protection	IP65 and IP67 when plugged and screwed down (EN 60529)

PUR CABLE	
No./diameter of wires	3 x 0.25 mm²
Wire isolation	PP (br, bl, bk)
C-track properties	5 million
Jacket	PUR (UL/CSA)
Outer diameter	approx. 4.1 mm
Bend radius (moving)	10 x outer diameter
Temperature range (fixed)	-40...+80 °C
Temperature range (mobile)	-25...+80 °C

LENGTH"L"	MATERIAL	JACKET COLOR	TE PN	DESCRIPTION	ITEM
3 pos 10mtr	PVC	Black	1-2273012-4	3x22AWG PVC 10.0m	8
3 pos 5mtr	PVC	Black	1-2273012-3	3x22AWG PVC 5.0m	7
3 pos 3mtr	PVC	Black	1-2273012-2	3x22AWG PVC 3.0m	6
3 pos 1.5mtr	PVC	Black	1-2273012-1	3x22AWG PVC 1.5m	5
3 pos 10mtr	PUR	Black	2273012-4	4x22AWG PUR 10.0m	4
3 pos 5mtr	PUR	Black	2273012-3	3x22AWG PUR 5.0m	3
3 pos 3mtr	PUR	Black	2273012-2	3x22AWG PUR 3.0m	2
3 pos 1.5mtr	PUR	Black	2273012-1	3x22AWG PUR 1.5m	1

THIS DRAWING IS A CONTROLLED DOCUMENT.

DIMENSIONS: mm

TOLERANCES UNLESS OTHERWISE SPECIFIED:
0 PLC ± -
1 PLC ± -
2 PLC ± -
3 PLC ± -
4 PLC ± -
ANGLES ± -

MATERIAL -
FINISH -

DWN SATHISH KUMAR .G 18JAN2013
CHK B.VELDHOVEN 18JAN2013
APVD A.VAN ZANDVOORT 18JAN2013
PRODUCT SPEC 108-19483
APPLICATION SPEC 114-32127
WEIGHT

TE Connectivity

NAME M8 X 1.0 ANGLED SOCKET PIGTAIL LED

SIZE A3 | CAGE CODE 00779 | DRAWING NO C-2273012 | RESTRICTED TO —

CUSTOMER DRAWING | SCALE NTS | SHEET 1 OF 1 | REV A3

Mouser Electronics

Authorized Distributor

Click to View Pricing, Inventory, Delivery & Lifecycle Information:

TE Connectivity:

1-2273012-2