THIS DRAWING IS UNPUBLISHED. RELEASED FOR PUBLICATION 20
© COPYRIGHT 20 BY - ALL RIGHTS RESERVED.

LOC	DIST
GP	00

REVISIONS

P	LTR	DESCRIPTION	DATE	DWN	APVD
	A	RELEASE	03NOV2016	JY	SH

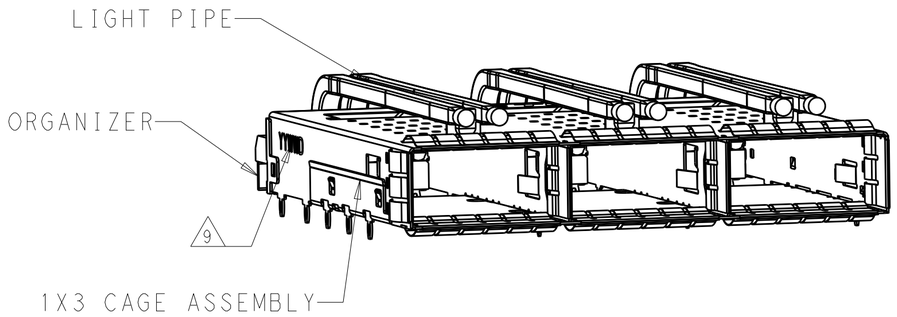

1. COMPONENTS
   CAGE ASSEMBLY: NICKEL-SILVER ALLOY
   EMI SPRING: COPPER ALLOY/NICKEL PLATE
   LIGHT PIPE: CLEAR POLYCARBONATE
   ORGANIZER: POLYESTER

2. REFERENCE APPLICATION SPECIFICATION 114-32023 FOR RECOMMENDED DRILL HOLE DIAMETER AND PLATING THICKNESS

3. DATUM AND BASIC DIMENSION ESTABLISHED BY CUSTOMER

4. MATES WITH QSFP28 MSA COMPATIBLE TRANSCEIVER.

5. LIGHT PIPES ARE SHIPPED ASSEMBLED ON CAGE

6. MINIMUM PC BOARD THICKNESS: SINGLE SIDED: 1.57 MIN
   DOUBLE SIDED: 2.20 MIN

7. DATUM -A- IS TOP SURFACE OF THE HOST BOARD.

8. THESE HOLES ARE OPTIONAL WHEN THE REAR PINS ARE REMOVED.

9. DATE CODE (YYWWD) MARKED APPROXIMATELY AS SHOWN.

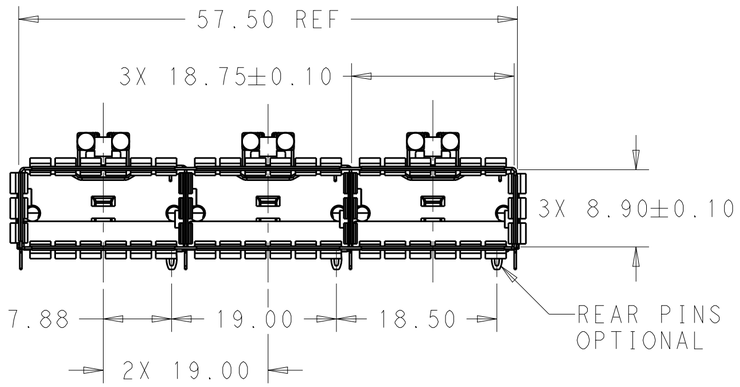

SCALE 2:1

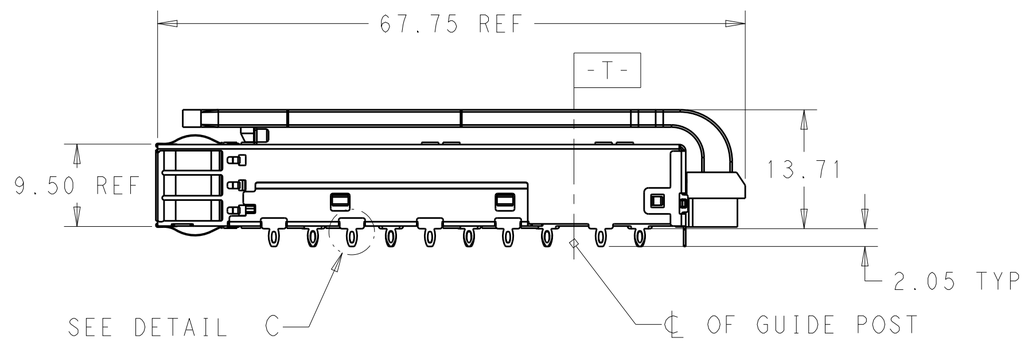

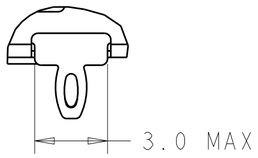

DETAIL C
SCALE 6:1

DUAL	WITHOUT	2170739-2
DUAL	WITH	2170739-1
LIGHT PIPE OPTIONAL	REAR PINS OPTIONAL	PART NUMBER

THIS DRAWING IS A CONTROLLED DOCUMENT.

DIMENSIONS: mm

TOLERANCES UNLESS OTHERWISE SPECIFIED:
0 PLC ±-
1 PLC ±0.25
2 PLC ±0.2
3 PLC ±-
4 PLC ±-
ANGLES ±-

MATERIAL: SEE NOTES
FINISH: SEE NOTES

DWN BING LIU 04JUL2014
CHK JASON YANG 04JUL2014
APVD SEAN HAN 03NOV2016
PRODUCT SPEC 108-19428
APPLICATION SPEC 114-32023
WEIGHT -

TE Connectivity

NAME: RECEPTACLE CAGE ASSEMLBY WITH LIGHT PIPES, THRU BEZEL, 1X3, QSFP28

SIZE	CAGE CODE	DRAWING NO	RESTRICTED TO
A2	00779	C-2170739	-

CUSTOMER DRAWING | SCALE 3:1 | SHEET 1 OF 6 | REV A

THIS DRAWING IS UNPUBLISHED. RELEASED FOR PUBLICATION 20
© COPYRIGHT 20 BY - ALL RIGHTS RESERVED.

LOC	DIST

REVISIONS

P	LTR	DESCRIPTION	DATE	DWN	APVD
	-	SEE SHEET 1	-	-	-

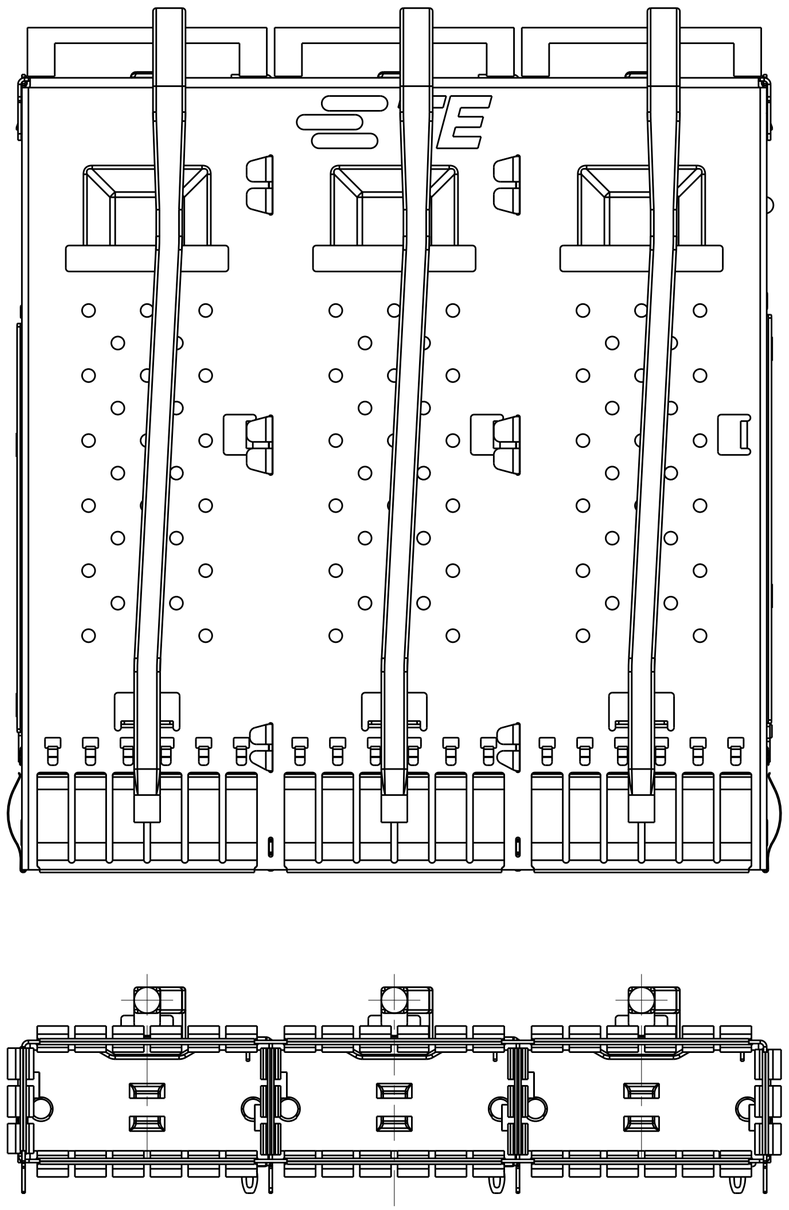

SCALE 3:1
UNDIMENSIONED DIMENSION SAME AS 2170739-1

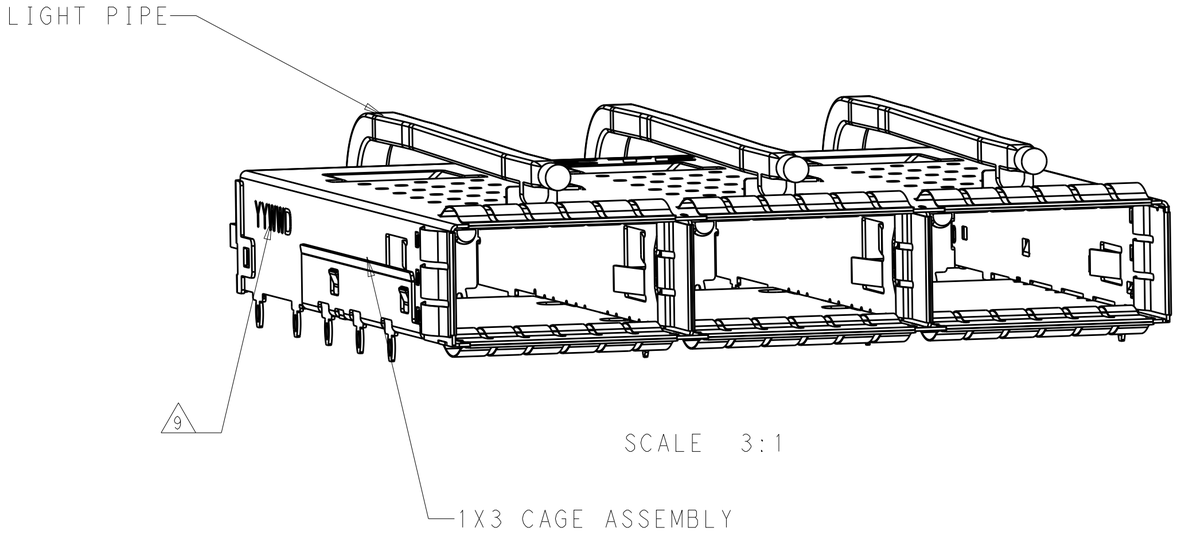

SCALE 3:1

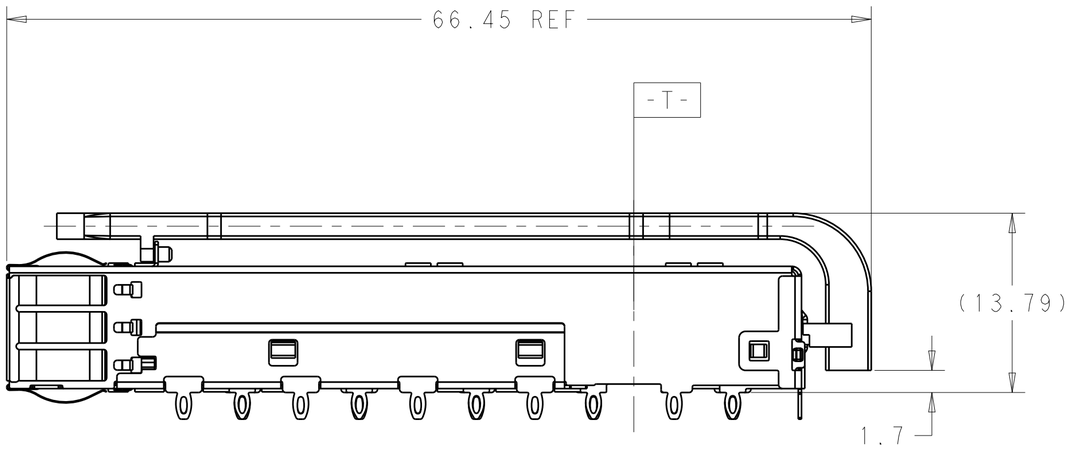

SINGLE	WITH	2170739-3
LIGHT PIPE OPTIONAL	REAR PINS OPTIONAL	PART NUMBER

THIS DRAWING IS A CONTROLLED DOCUMENT.

DIMENSIONS: mm

TOLERANCES UNLESS OTHERWISE SPECIFIED:
0 PLC ±-
1 PLC ±0.25
2 PLC ±0.2
3 PLC ±-
4 PLC ±-
ANGLES ±-

MATERIAL: SEE NOTES material_2
FINISH: SEE NOTES finish_spec_2

DWN BING LIU 04JUL2014
CHK JASON YANG 04JUL2014
APVD SEAN HAN 03NOV2016
PRODUCT SPEC 108-19428
APPLICATION SPEC 114-32023
WEIGHT -

TE Connectivity

NAME: RECEPTACLE CAGE ASSEMLBY WITH LIGHT PIPES, THRU BEZEL, 1X3, QSFP28

SIZE	CAGE CODE	DRAWING NO	RESTRICTED TO
A2	00779	C-2170739	-

CUSTOMER DRAWING | SCALE 3:1 | SHEET 2 OF 6 | REV A

THIS DRAWING IS UNPUBLISHED. RELEASED FOR PUBLICATION 20
© COPYRIGHT 20 BY - ALL RIGHTS RESERVED.

LOC	DIST

REVISIONS

P	LTR	DESCRIPTION	DATE	DWN	APVD
	-	SEE SHEET 1	-	-	-

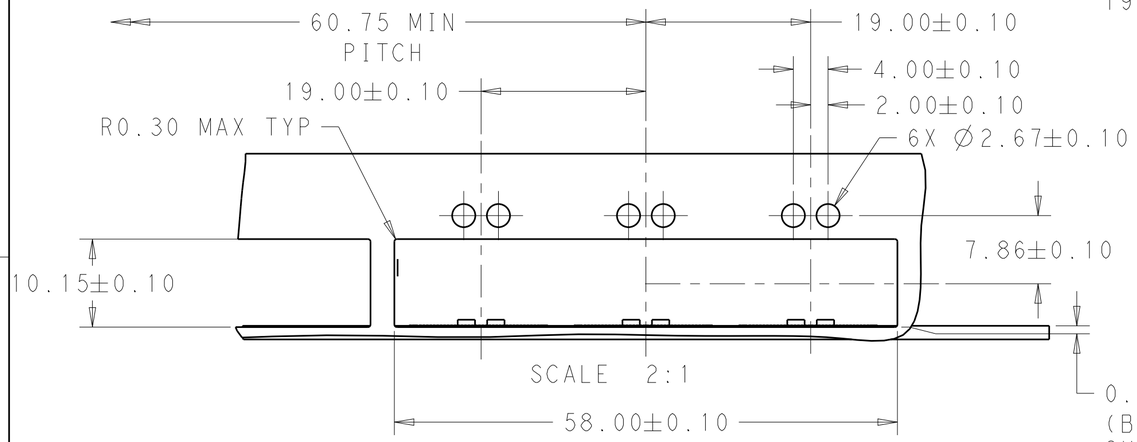

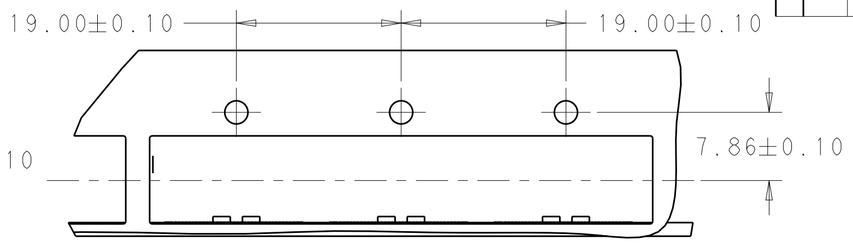

SCALE 2:1
FOR SINGLE LP APPIICATION,UNDIMENSIONED
DIMENSION SAME AS DUAL LP APPLICATION

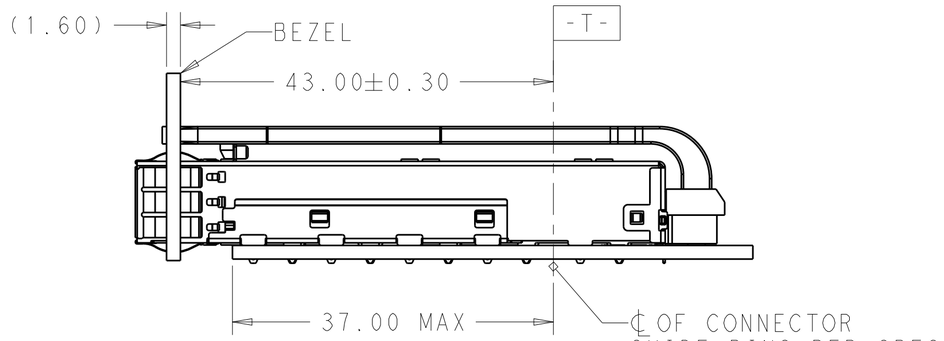

SINGLE SIDE MOUNTING
SCALE 2:1

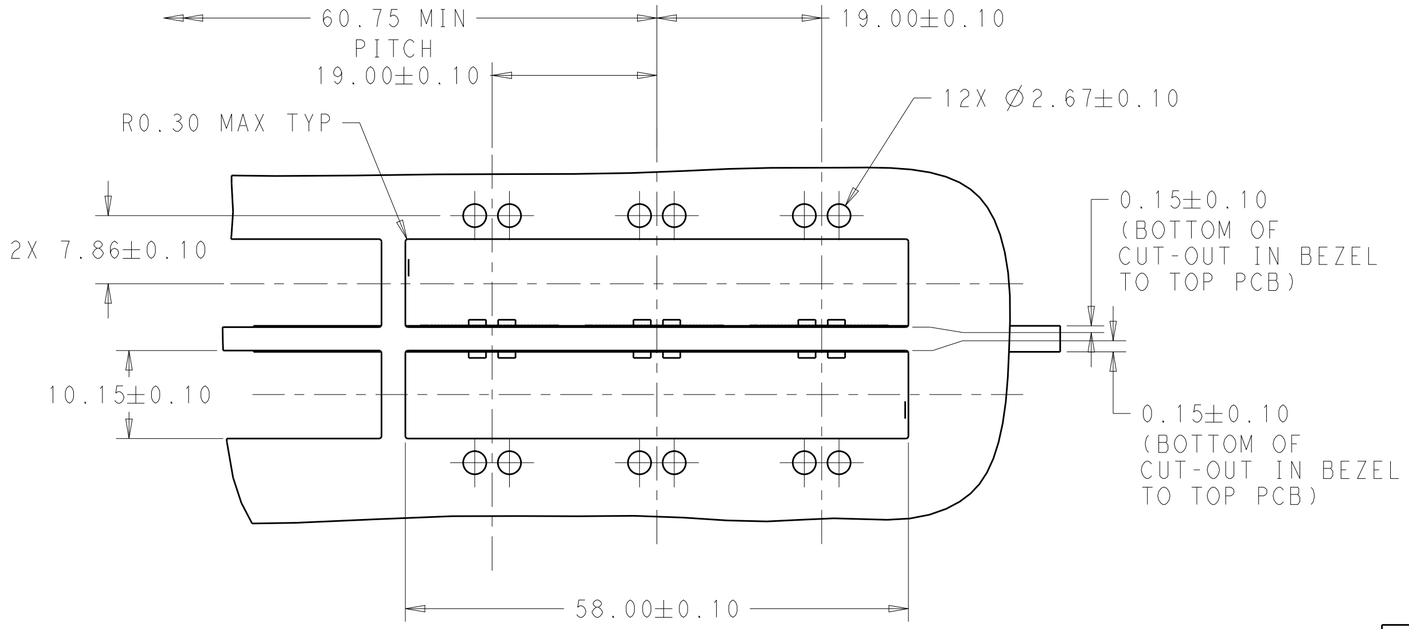

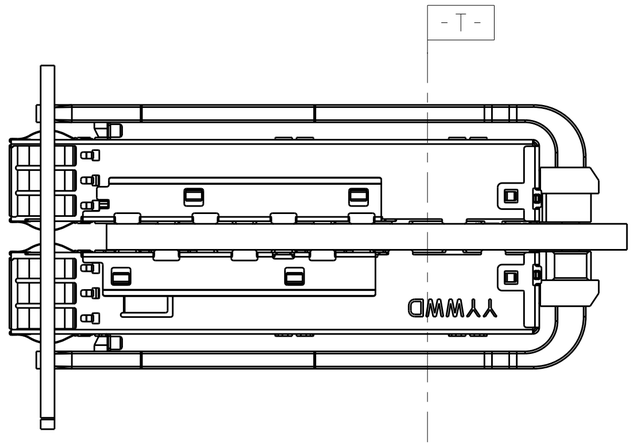

BELLY TO BELLY MOUNTING
SCALE 2:1

THIS DRAWING IS A CONTROLLED DOCUMENT.

DIMENSIONS: mm

TOLERANCES UNLESS OTHERWISE SPECIFIED:

0 PLC	±-
1 PLC	±0.25
2 PLC	±0.2
3 PLC	±-
4 PLC	±-
ANGLES	±-

MATERIAL: SEE NOTES material_2

FINISH: SEE NOTES finish_spec_2

DWN	BING LIU	04JUL2014
CHK	JASON YANG	04JUL2014
APVD	SEAN HAN	03NOV2016

PRODUCT SPEC: 108-19428

APPLICATION SPEC: 114-32023

WEIGHT: -

CUSTOMER DRAWING

TE Connectivity

NAME: RECEPTACLE CAGE ASSEMLBY WITH LIGHT PIPES, THRU BEZEL, 1X3, QSFP28

SIZE	CAGE CODE	DRAWING NO	RESTRICTED TO
A2	00779	C-2170739	-

SCALE	SHEET	REV
3:1	3 OF 6	A

1471-9 (3/11)

THIS DRAWING IS UNPUBLISHED. RELEASED FOR PUBLICATION 20
© COPYRIGHT 20 BY - ALL RIGHTS RESERVED.

LOC	DIST

REVISIONS

P	LTR	DESCRIPTION	DATE	DWN	APVD
	-	SEE SHEET 1	-	-	-

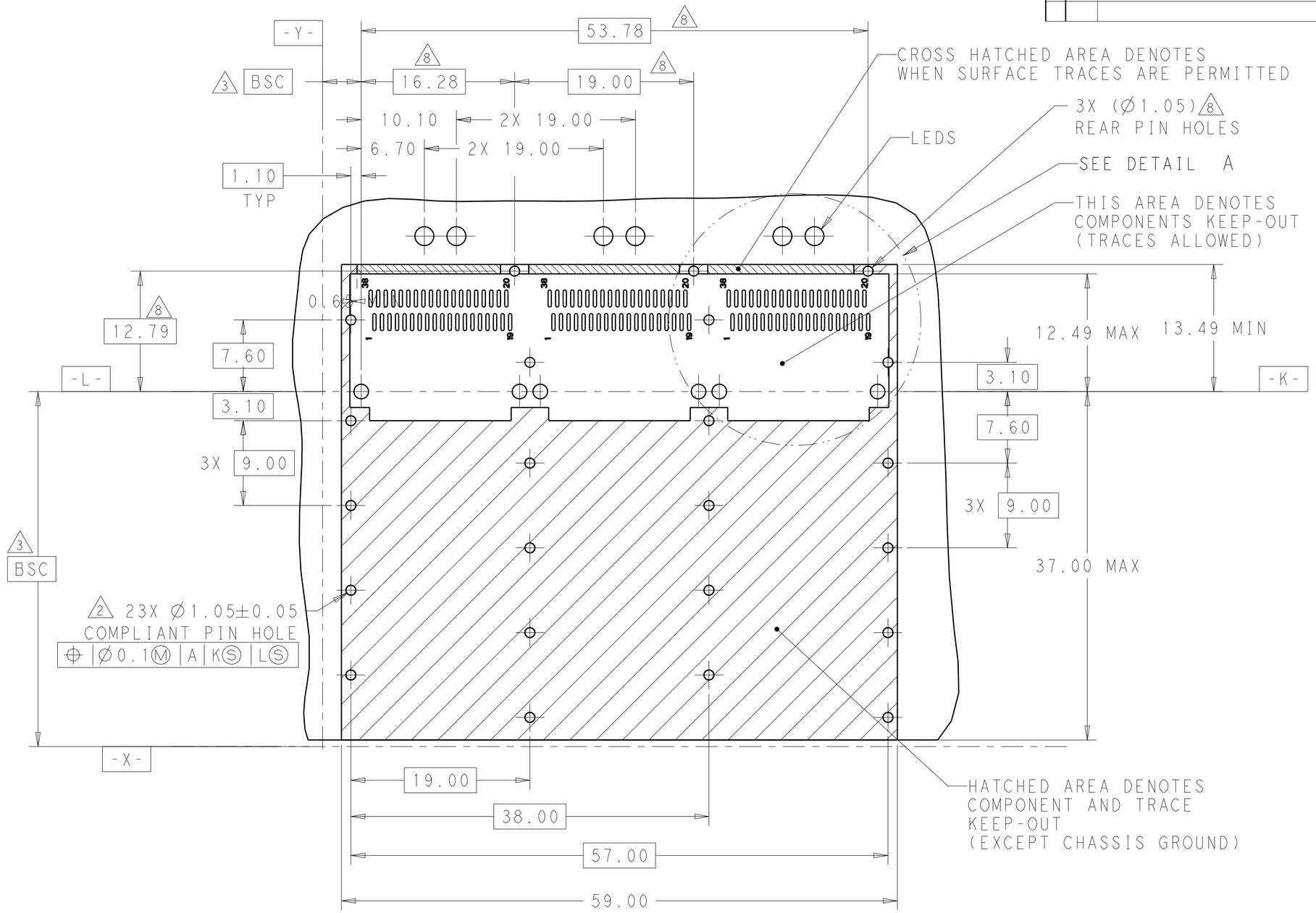

RECOMMENDED PCB LAYOUT
SINGLE TYPE
PCB TOLERANCE: ±0.05
SCALE 3:1

THIS DRAWING IS A CONTROLLED DOCUMENT.

DIMENSIONS: mm

TOLERANCES UNLESS OTHERWISE SPECIFIED:
0 PLC ±-
1 PLC ±0.25
2 PLC ±0.2
3 PLC ±-
4 PLC ±-
ANGLES ±-

MATERIAL: SEE NOTES material_2
FINISH: SEE NOTES finish_spec_2

DWN BING LIU 04JUL2014
CHK JASON YANG 04JUL2014
APVD SEAN HAN 03NOV2016
PRODUCT SPEC 108-19428
APPLICATION SPEC 114-32023
WEIGHT -

TE Connectivity

NAME: RECEPTACLE CAGE ASSEMLBY WITH LIGHT PIPES, THRU BEZEL, 1X3, QSFP28

SIZE	CAGE CODE	DRAWING NO	RESTRICTED TO
A2	00779	C-2170739	-

CUSTOMER DRAWING | SCALE 3:1 | SHEET 4 OF 6 | REV A

THIS DRAWING IS UNPUBLISHED. RELEASED FOR PUBLICATION 20
© COPYRIGHT 20 BY - ALL RIGHTS RESERVED.

LOC	DIST

REVISIONS

P	LTR	DESCRIPTION	DATE	DWN	APVD
	-	SEE SHEET 1	-	-	-

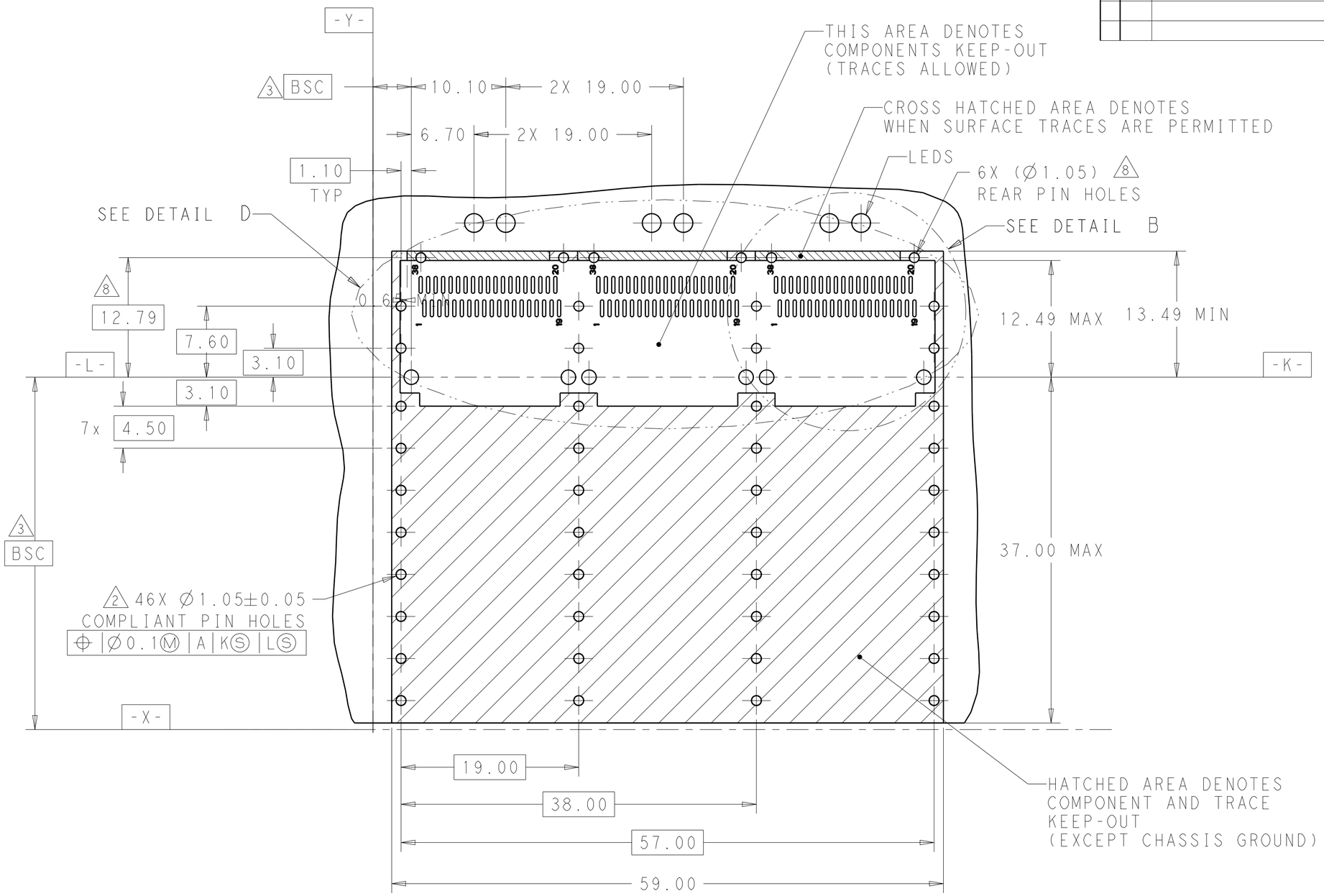

RECOMMENDED PCB LAYOUT
BELLY TO BELLY TYPE
PCB TOLERANCE: ±0.05
SCALE 3:1

THIS DRAWING IS A CONTROLLED DOCUMENT.

DIMENSIONS: mm

TOLERANCES UNLESS OTHERWISE SPECIFIED:
0 PLC ±-
1 PLC ±0.25
2 PLC ±0.2
3 PLC ±-
4 PLC ±-
ANGLES ±-

MATERIAL: SEE NOTES material_2
FINISH: SEE NOTES finish_spec_2

DWN BING LIU 04JUL2014
CHK JASON YANG 04JUL2014
APVD SEAN HAN 03NOV2016
PRODUCT SPEC 108-19428
APPLICATION SPEC 114-32023
WEIGHT -
CUSTOMER DRAWING

TE Connectivity

NAME: RECEPTACLE CAGE ASSEMLBY WITH LIGHT PIPES, THRU BEZEL, 1X3, QSFP28

SIZE	CAGE CODE	DRAWING NO	RESTRICTED TO
A2	00779	C-2170739	-

SCALE 3:1 SHEET 5 OF 6 REV A

THIS DRAWING IS UNPUBLISHED. RELEASED FOR PUBLICATION 20
© COPYRIGHT 20 BY - ALL RIGHTS RESERVED.

LOC	DIST

REVISIONS

P	LTR	DESCRIPTION	DATE	DWN	APVD
	-	SEE SHEET 1	-	-	-

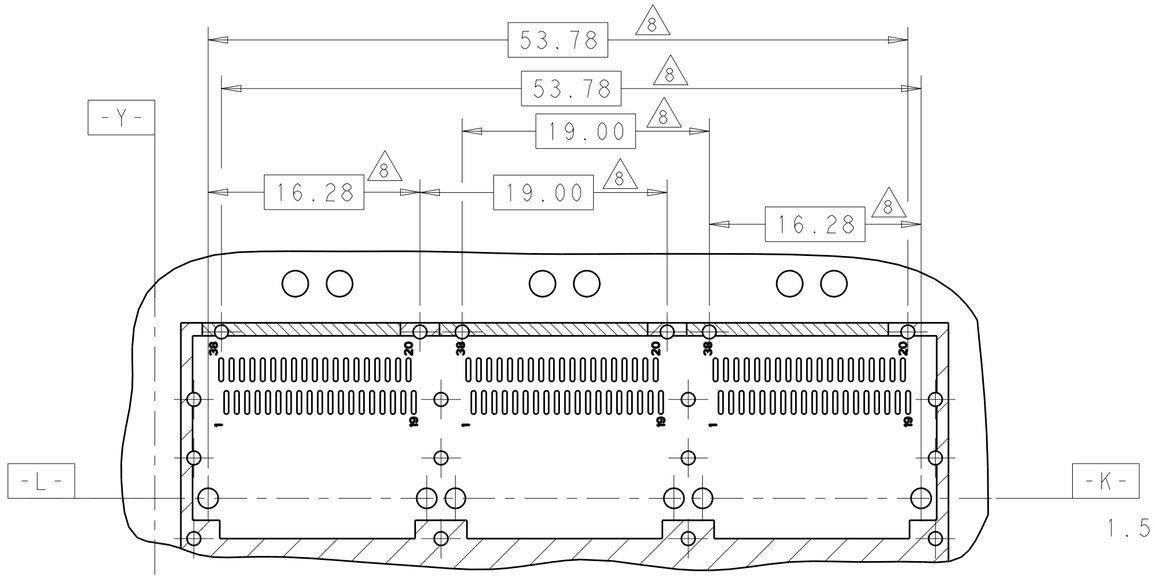

DETAIL D
SCALE 3:1

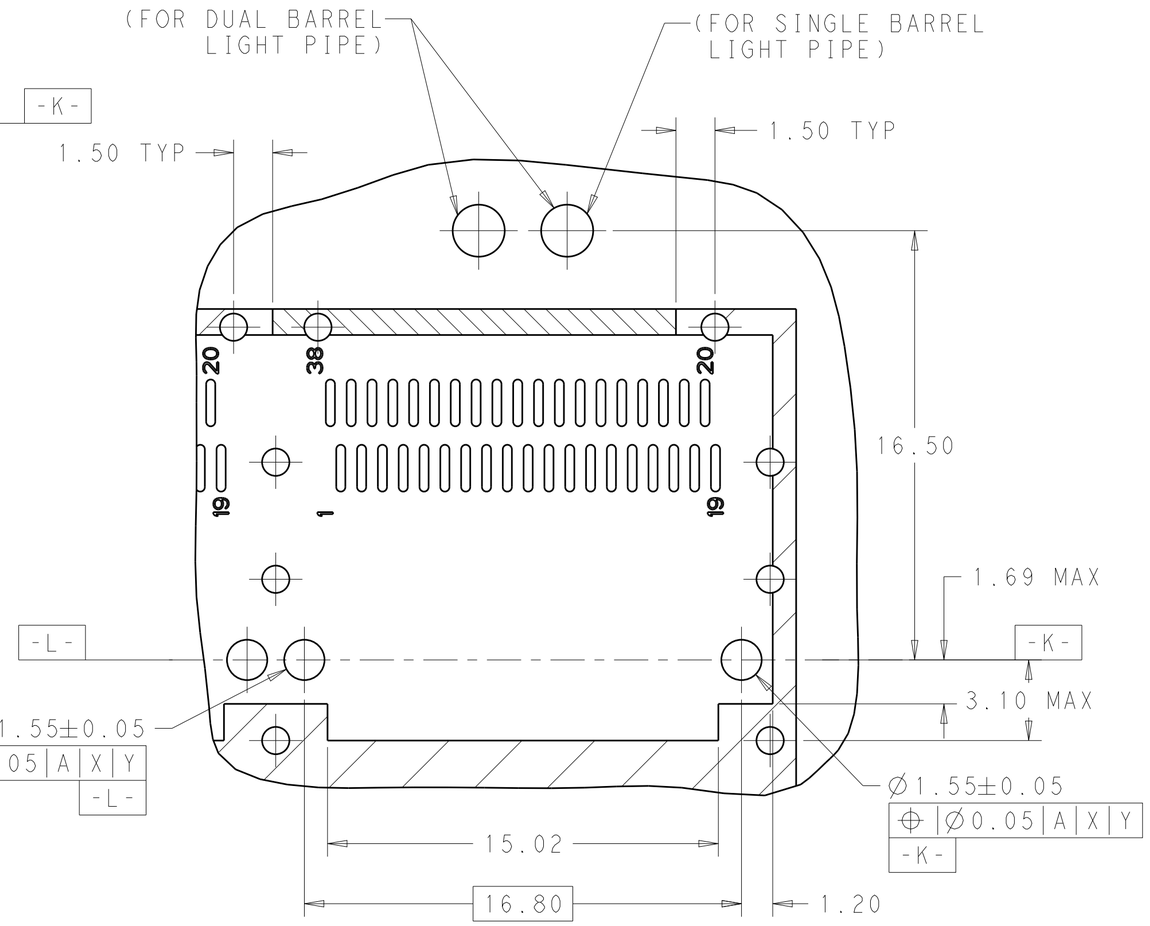

DETAIL B
SCALE 6:1

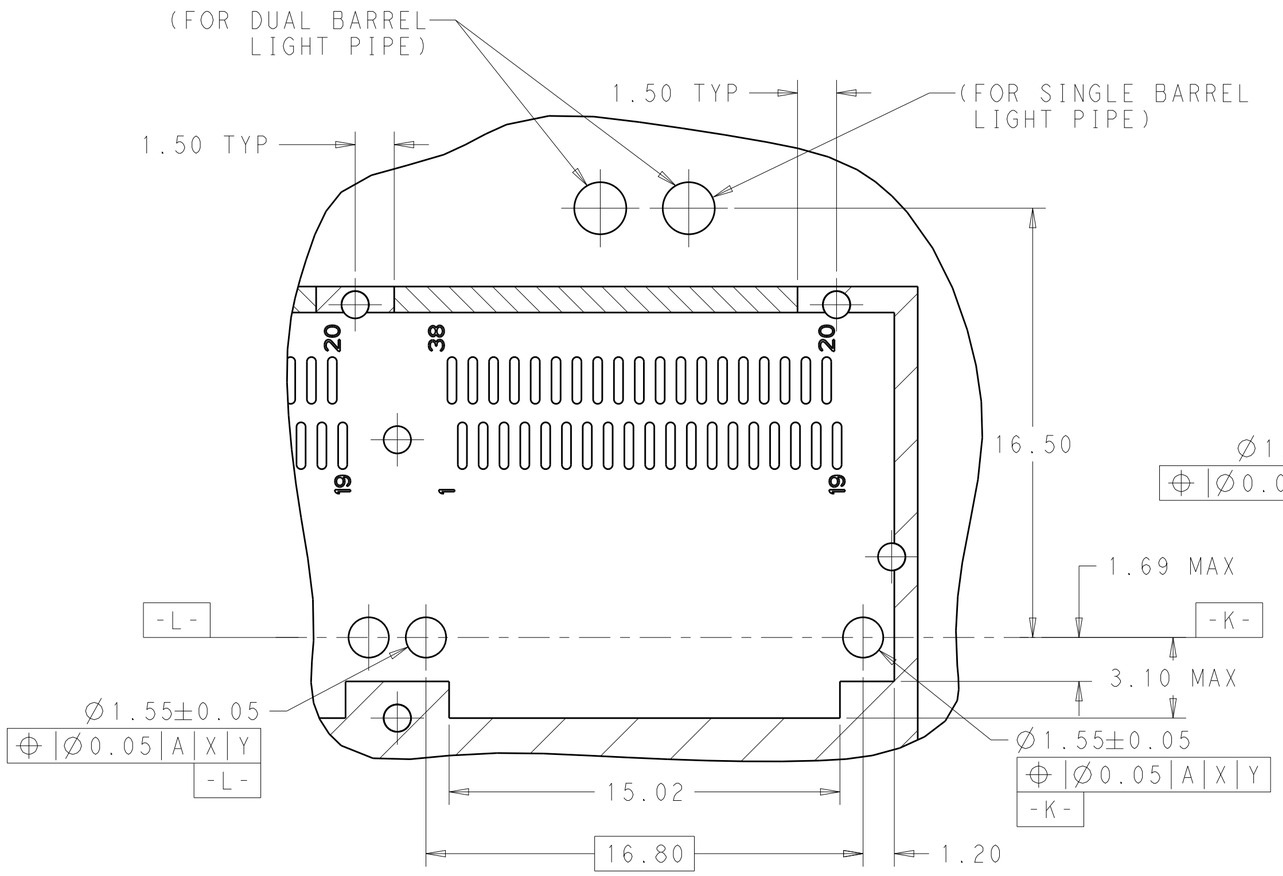

DETAIL A
SCALE 6:1

THIS DRAWING IS A CONTROLLED DOCUMENT.	DWN 04JUL2014 BING LIU	TE Connectivity	
DIMENSIONS: mm	CHK 04JUL2014 JASON YANG	NAME RECEPTACLE CAGE ASSEMLBY WITH LIGHT PIPES, THRU BEZEL, 1X3, QSFP28	
TOLERANCES UNLESS OTHERWISE SPECIFIED: 0 PLC ±- 1 PLC ±0.25 2 PLC ±0.2 3 PLC ±- 4 PLC ±- ANGLES ±-	APVD 03NOV2016 SEAN HAN	SIZE A2 / CAGE CODE 00779	DRAWING NO C-2170739 / RESTRICTED TO -
	PRODUCT SPEC 108-19428		
	APPLICATION SPEC 114-32023		
MATERIAL SEE NOTES material_2	FINISH SEE NOTES finish_spec_2	WEIGHT -	
	CUSTOMER DRAWING	SCALE 3:1 / SHEET 6 OF 6	REV A

1471-9 (3/11)

Mouser Electronics

Authorized Distributor

Click to View Pricing, Inventory, Delivery & Lifecycle Information:

TE Connectivity:

2170739-2