THIS DRAWING IS UNPUBLISHED. RELEASED FOR PUBLICATION 20
© COPYRIGHT 20 BY - ALL RIGHTS RESERVED.

LOC	DIST
GP	00

REVISIONS

P	LTR	DESCRIPTION	DATE	DWN	APVD
	A	RELEASE	02NOV2016	JY	SH
	B	REVISED PER ECO-20-012918	1AUG2020	JW	SH

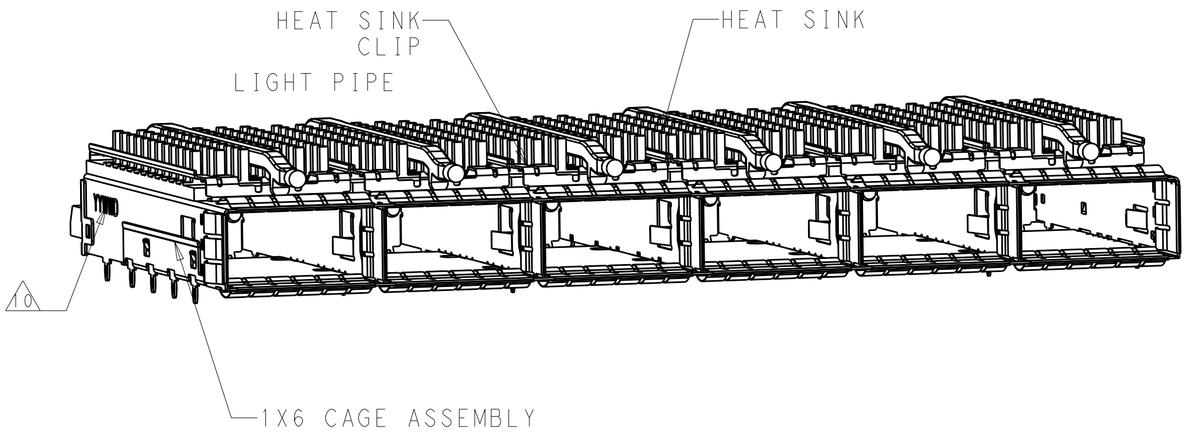

1. COMPONENTS
   CAGE ASSEMBLY: NICKEL-SILVER ALLOY
   HEAT SINK: ALUMINUM/BLACK ANODIZE
   HEAT SINK CLIP: STAINLESS STEEL
   EMI SPRING: COPPER ALLOY/NICKEL PLATE
   LIGHT PIPE: CLEAR POLYCARBONATE WITH UL 94 V-0
   ORGANIZER: POLYESTER WITH UL 94 V-0

2. REFERENCE APPLICATION SPECIFICATION 114-32023 FOR RECOMMENDED DRILL HOLE DIAMETER AND PLATING THICKNESS

3. DATUM AND BASIC DIMENSION ESTABLISHED BY CUSTOMER

4. DIMENSION APPLIES WITH MODULE INSERTED IN CAGE

5. HEAT SINKS, HEAT SINK CLIPS AND LIGHT PIPES ARE SHIPPED ASSEMBLED ON CAGE

6. MINIMUM PC BOARD THICKNESS: SINGLE SIDED: 1.57 MIN
   DOUBLE SIDED: 2.20 MIN

7. DATUM -A- IS TOP SURFACE OF THE HOST BOARD.

8. THESE HOLES ARE OPTIONAL WHEN THE REAR PINS ARE REMOVED.

9. MATES WITH QSFP28 MSA COMPATIBLE TRANSCEIVER.

10. DATE CODE (YYWWD) MARKED APPROXIMATELY AS SHOWN.

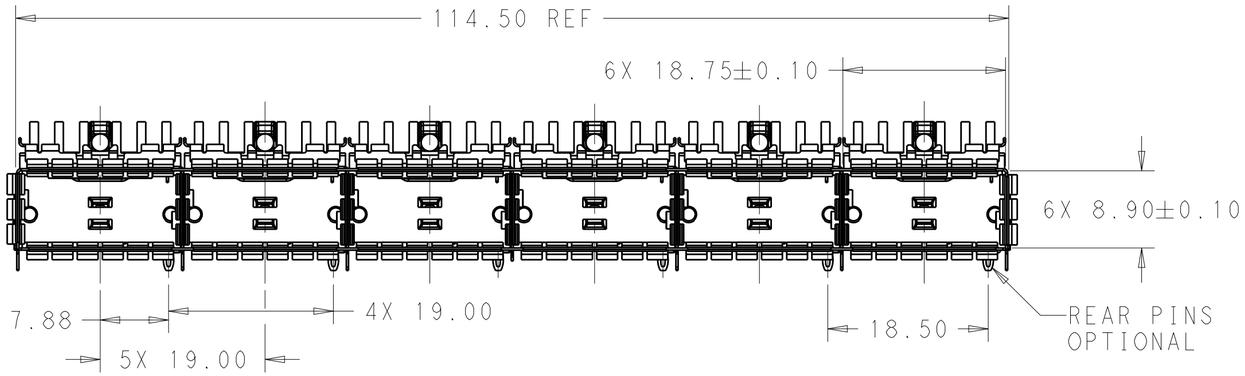

SCALE 2:1

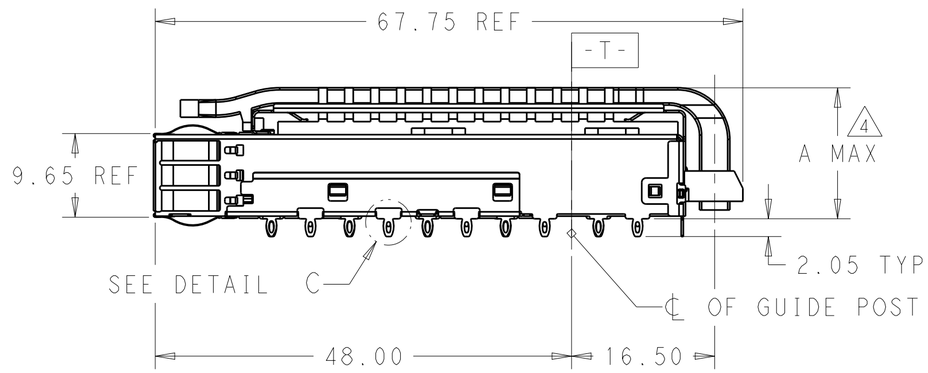

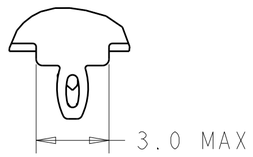

DETAIL C
SCALE 6:1

THIS DRAWING IS A CONTROLLED DOCUMENT.

DIMENSIONS: mm

TOLERANCES UNLESS OTHERWISE SPECIFIED:
0 PLC ±-
1 PLC ±0.25
2 PLC ±0.2
3 PLC ±-
4 PLC ±-
ANGLES ±-

MATERIAL: SEE NOTES
FINISH: SEE NOTES

DWN JASON YANG 24OCT2013
CHK SEAN HAN 02NOV2016
APVD -
PRODUCT SPEC 108-19428
APPLICATION SPEC 114-32023
WEIGHT -

TE Connectivity

NAME: CAGE ASSEMLBY, 1X6, QSFP28 WITH HEAT SINKS AND LIGHT PIPES, THRU BEZEL, EMI SPRING

SIZE	CAGE CODE	DRAWING NO	RESTRICTED TO
A2	00779	C-2170708	-

CUSTOMER DRAWING | SCALE 1:1 | SHEET 1 OF 9 | REV B

THIS DRAWING IS UNPUBLISHED. RELEASED FOR PUBLICATION 20
© COPYRIGHT 20 BY - ALL RIGHTS RESERVED.

LOC	DIST

REVISIONS

P	LTR	DESCRIPTION	DATE	DWN	APVD
	-	SEE SHEET 1	-	-	-

HEAT SINK OPTION

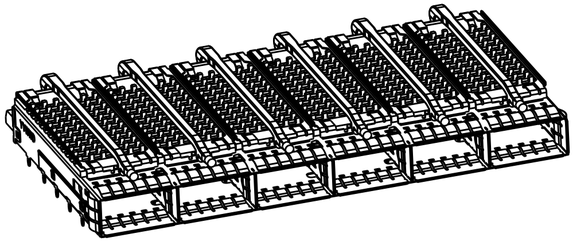

PCI HEAT SINK
SCALE 1:1

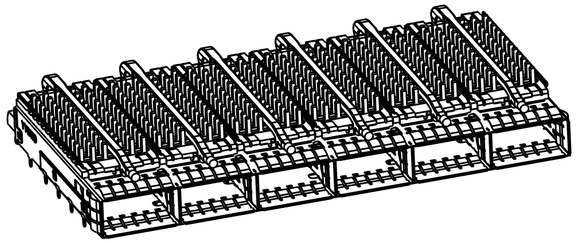

SAN HEAT SINK
SCALE 1:1

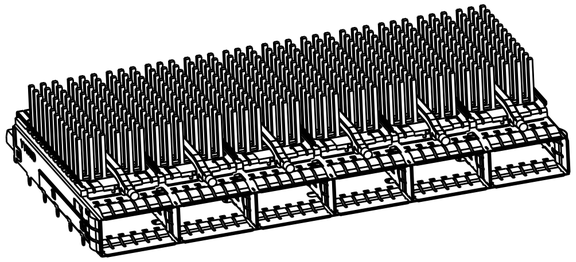

NETWORKING
SCALE 1:1

LIGHT PIPE OPTION

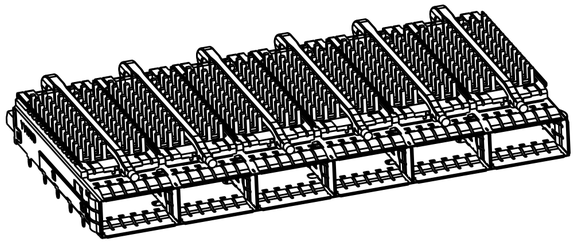

SINGLE LIGHT PIPE
SCALE 1:1

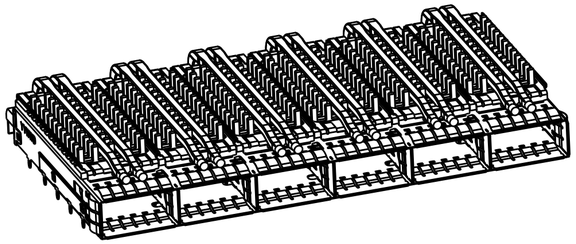

DUAL LIGHT PIPE
SCALE 1:1

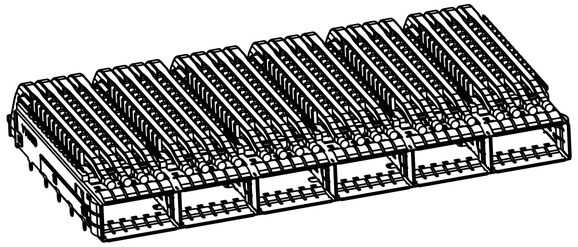

QUAD LIGHT PIPE
SCALE 1:1

OF REAR LEGS OPTIONS

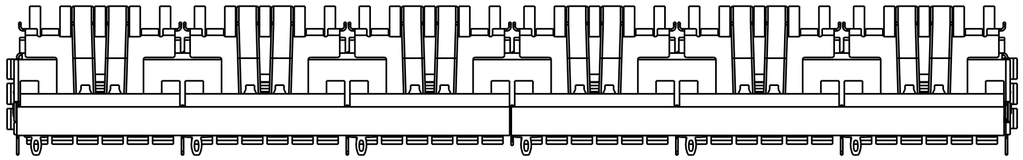

1 REAR LEGS
SCALE 2:1

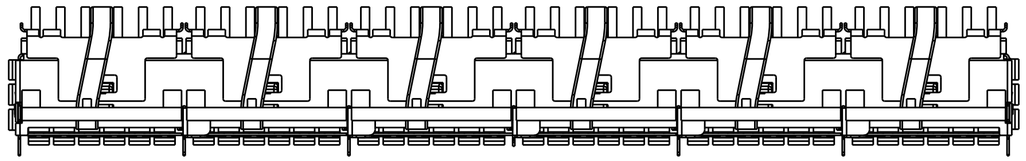

0 REAR LEGS
SCALE 2:1

THIS DRAWING IS A CONTROLLED DOCUMENT.

DIMENSIONS: mm

TOLERANCES UNLESS OTHERWISE SPECIFIED:

0 PLC	±-
1 PLC	±0.25
2 PLC	±0.2
3 PLC	±-
4 PLC	±-
ANGLES	±-

MATERIAL: SEE NOTES material_2

FINISH: SEE NOTES finish_spec_2

DWN: JASON YANG 24OCT2013
CHK: SEAN HAN 02NOV2016
APVD: -
PRODUCT SPEC: 108-19428
APPLICATION SPEC: 114-32023
WEIGHT: -

TE Connectivity

NAME: CAGE ASSEMLBY, 1X6, QSFP28 WITH HEAT SINKS AND LIGHT PIPES, THRU BEZEL, EMI SPRING

SIZE	CAGE CODE	DRAWING NO	RESTRICTED TO
A2	00779	C-2170708	-

CUSTOMER DRAWING | SCALE 3:1 | SHEET 2 OF 9 | REV B

1471-9 (3/11)

THIS DRAWING IS UNPUBLISHED. RELEASED FOR PUBLICATION 20
© COPYRIGHT 20 BY - ALL RIGHTS RESERVED.

LOC	DIST

REVISIONS

P	LTR	DESCRIPTION	DATE	DWN	APVD
	-	SEE SHEET 1	-	-	-

5-2170708-5 UNMARKED DIMENIONS SAME AS 2170708-1

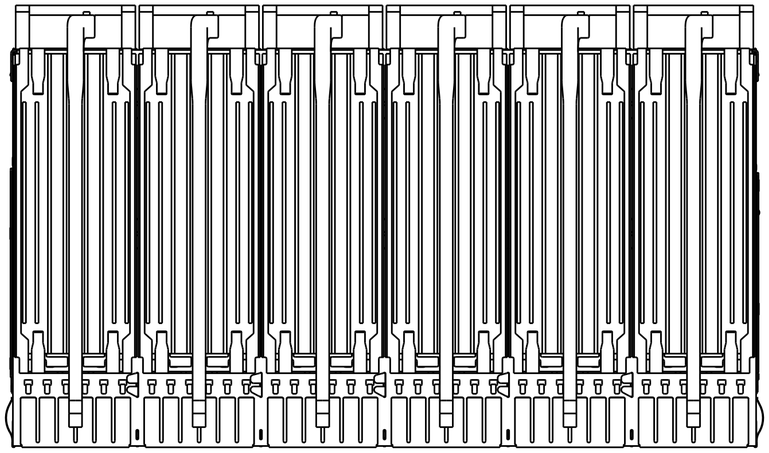

SCALE 3:2

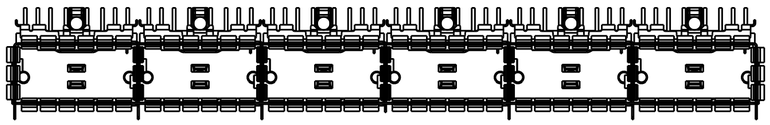

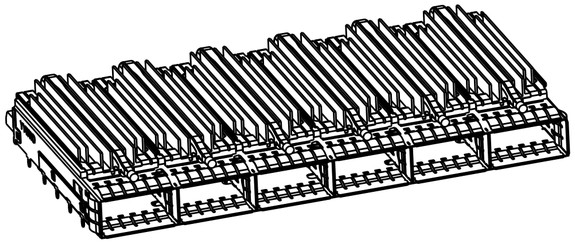

5-2170708-5
SCALE 1:1

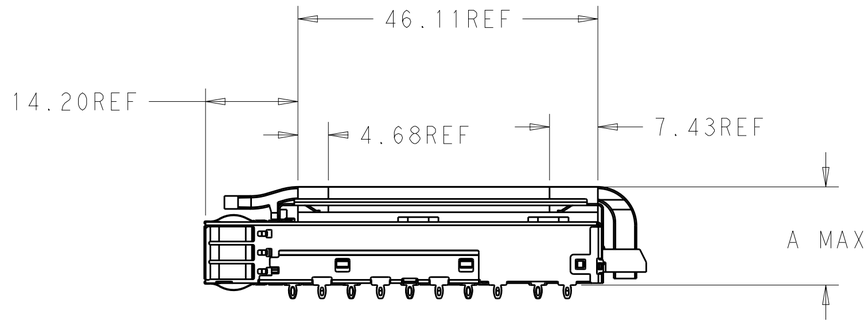

0	16	FIN TYPE , SAN	SINGLE	5-2170708-5
1	14.9	CUSTOMER SPECIFIC	QUAD	4-2170708-7
0	23.0	NETWORKING	QUAD	4-2170708-6
0	16.0	SAN	QUAD	4-2170708-5
0	13.7	PCI	QUAD	4-2170708-4
1	23.0	NETWORKING	QUAD	4-2170708-3
1	16.0	SAN	QUAD	4-2170708-2
1	13.7	PCI	QUAD	4-2170708-1
0	16.5	CUSTOMIZED	DUAL	2-2170708-7
0	23.0	NETWORKING	DUAL	2-2170708-6
0	16.0	SAN	DUAL	2-2170708-5
0	13.7	PCI	DUAL	2-2170708-4
1	23.0	NETWORKING	DUAL	2-2170708-3
1	16.0	SAN	DUAL	2-2170708-2
1	13.7	PCI	DUAL	2-2170708-1
1	14.9	CUSTOMER SPECIFIC	SINGLE	1-2170708-1
0	23.0	NETWORKING	SINGLE	2170708-6
0	16.0	SAN	SINGLE	2170708-5
0	13.7	PCI	SINGLE	2170708-4
1	23.0	NETWORKING	SINGLE	2170708-3
1	16.0	SAN	SINGLE	2170708-2
1	13.7	PCI	SINGLE	2170708-1
# OF REAR PIN	DIM A	APPLICATION	LIGHT PIPE OPTION	PART NUMBER

THIS DRAWING IS A CONTROLLED DOCUMENT.

DIMENSIONS: mm

TOLERANCES UNLESS OTHERWISE SPECIFIED:
0 PLC ±-
1 PLC ±0.25
2 PLC ±0.2
3 PLC ±-
4 PLC ±-
ANGLES ±-

MATERIAL: SEE NOTES material_2
FINISH: SEE NOTES finish_spec_2

DWN JASON YANG 24OCT2013
CHK SEAN HAN 02NOV2016
APVD -
PRODUCT SPEC 108-19428
APPLICATION SPEC 114-32023
WEIGHT -
CUSTOMER DRAWING

TE Connectivity

NAME: CAGE ASSEMLBY, 1X6, QSFP28 WITH HEAT SINKS AND LIGHT PIPES, THRU BEZEL, EMI SPRING

SIZE A2 | CAGE CODE 00779 | DRAWING NO C-2170708 | RESTRICTED TO -

SCALE 3:1 | SHEET 3 OF 9 | REV B

THIS DRAWING IS UNPUBLISHED. RELEASED FOR PUBLICATION 20
© COPYRIGHT 20 BY - ALL RIGHTS RESERVED.

LOC	DIST

REVISIONS

P	LTR	DESCRIPTION	DATE	DWN	APVD
	-	SEE SHEET 1	-	-	-

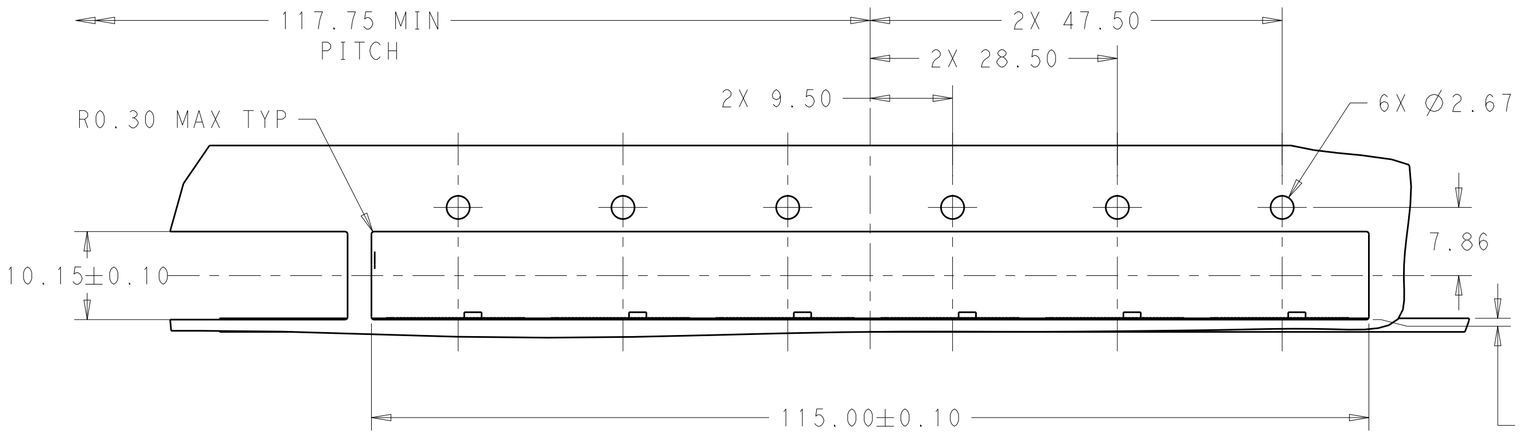

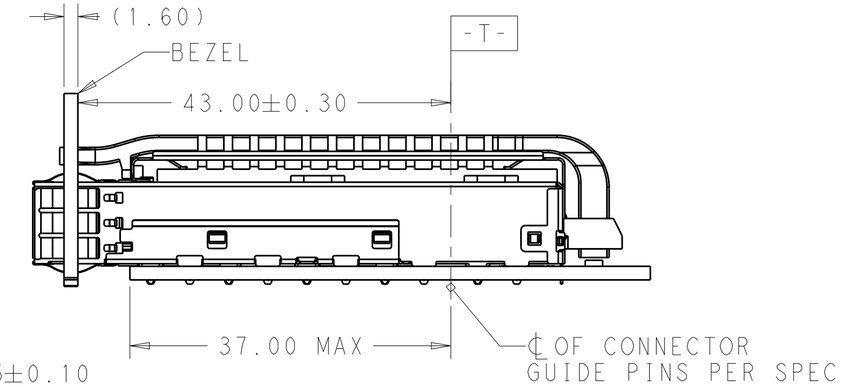

SINGLE SIDE MOUNTING
SCALE 2:1

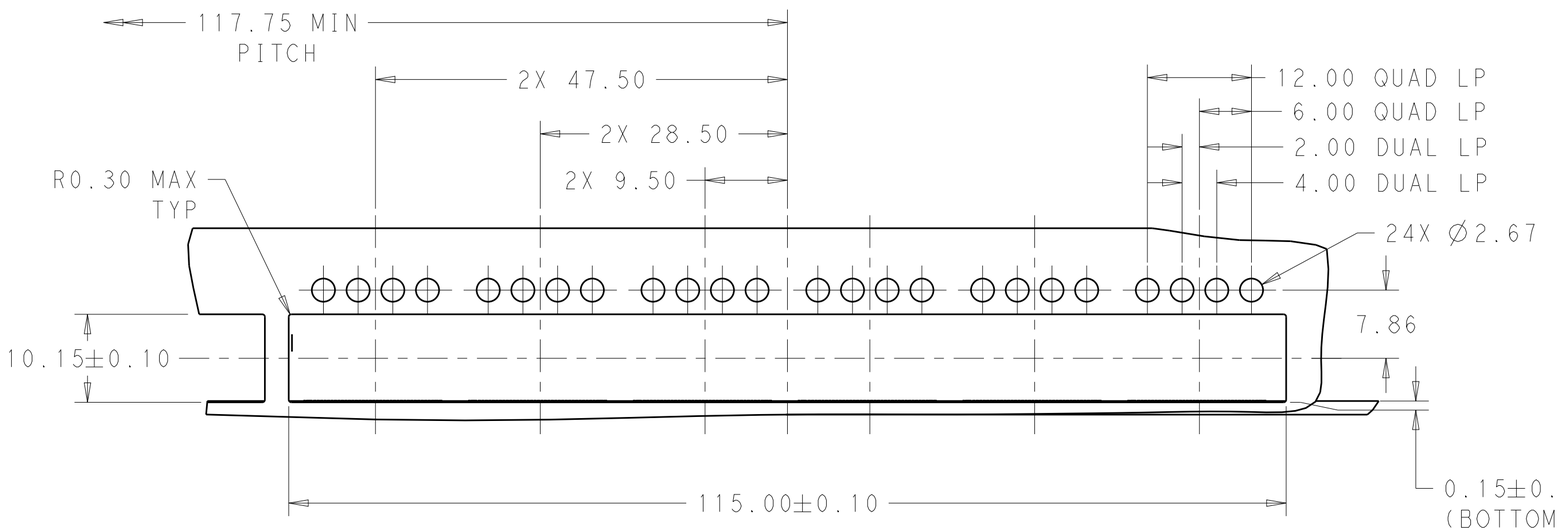

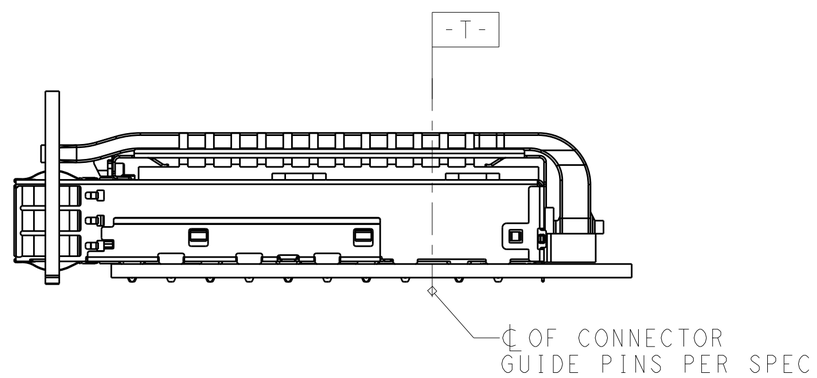

SINGLE SIDE MOUNTING
SCALE 2:1

THIS DRAWING IS A CONTROLLED DOCUMENT.

DIMENSIONS: mm

TOLERANCES UNLESS OTHERWISE SPECIFIED:
0 PLC ±-
1 PLC ±0.25
2 PLC ±0.2
3 PLC ±-
4 PLC ±-
ANGLES ±-

MATERIAL: SEE NOTES material_2
FINISH: SEE NOTES finish_spec_2

DWN JASON YANG 24OCT2013
CHK SEAN HAN 02NOV2016
APVD -
PRODUCT SPEC 108-19428
APPLICATION SPEC 114-32023
WEIGHT -

TE Connectivity

NAME: CAGE ASSEMLBY, 1X6, QSFP28 WITH HEAT SINKS AND LIGHT PIPES, THRU BEZEL, EMI SPRING

SIZE	CAGE CODE	DRAWING NO	RESTRICTED TO
A2	00779	C-2170708	-

CUSTOMER DRAWING | SCALE 3:1 | SHEET 4 OF 9 | REV B

THIS DRAWING IS UNPUBLISHED. RELEASED FOR PUBLICATION 20
© COPYRIGHT 20 BY - ALL RIGHTS RESERVED.

LOC	DIST

REVISIONS

P	LTR	DESCRIPTION	DATE	DWN	APVD
	-	SEE SHEET 1	-	-	-

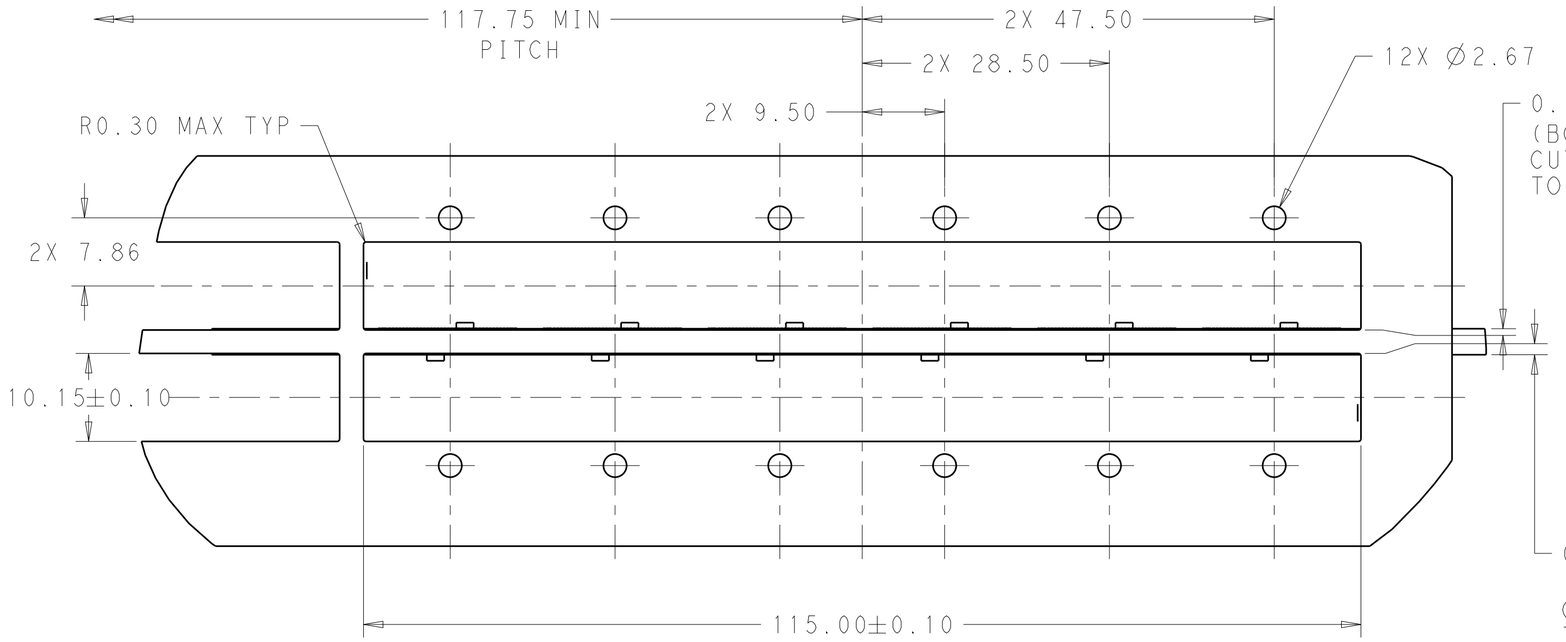

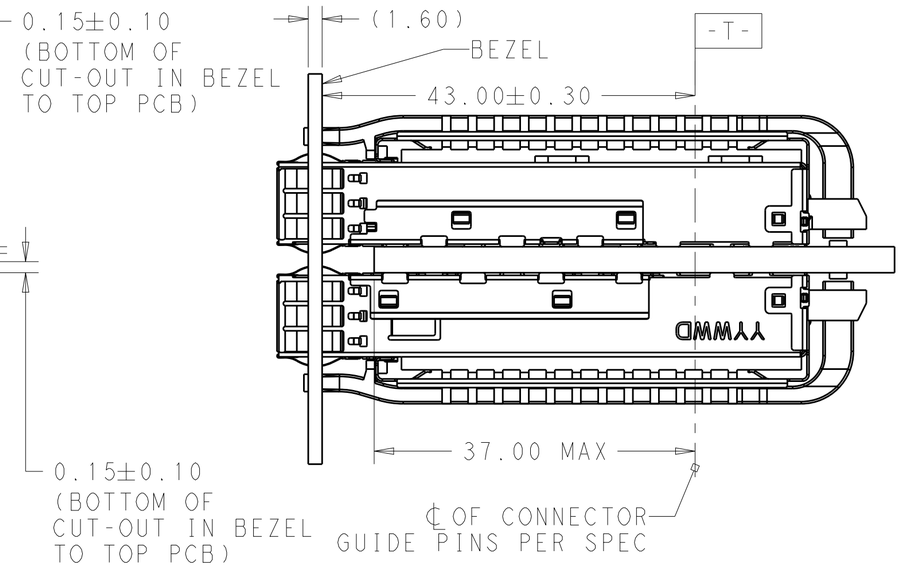

BELLY TO BELLY MOUNTING
SCALE 2:1

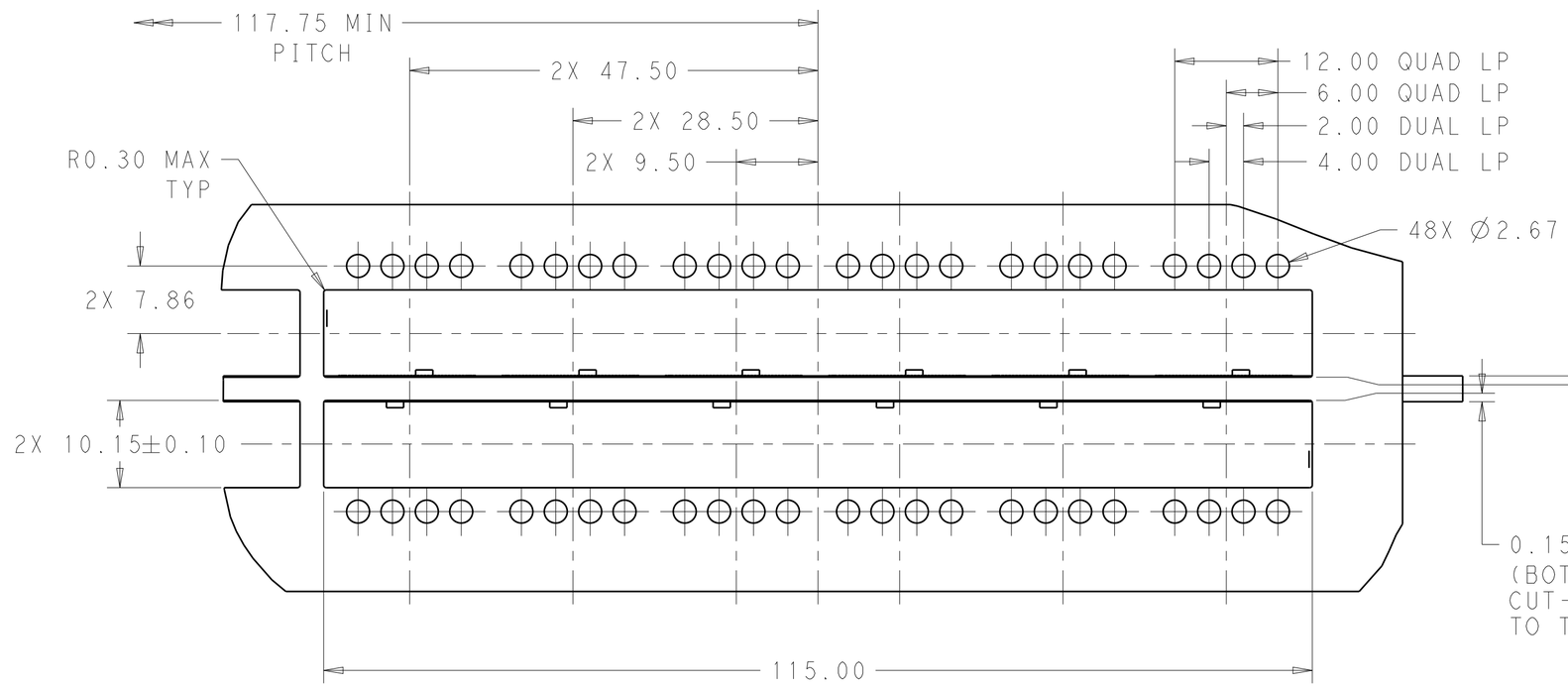

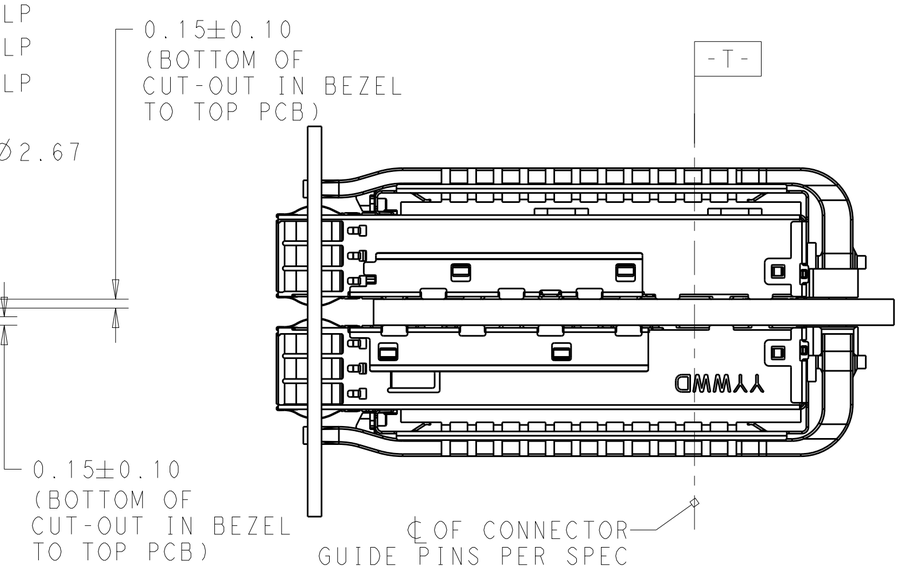

BELLY TO BELLY MOUNTING
SCALE 2:1

THIS DRAWING IS A CONTROLLED DOCUMENT.

DIMENSIONS: mm

TOLERANCES UNLESS OTHERWISE SPECIFIED:
0 PLC ±-
1 PLC ±0.25
2 PLC ±0.2
3 PLC ±-
4 PLC ±-
ANGLES ±-

MATERIAL: SEE NOTES material_2
FINISH: SEE NOTES finish_spec_2

DWN JASON YANG 24OCT2013
CHK SEAN HAN 02NOV2016
APVD -
PRODUCT SPEC 108-19428
APPLICATION SPEC 114-32023
WEIGHT -

TE Connectivity

NAME: CAGE ASSEMLBY, 1X6, QSFP28 WITH HEAT SINKS AND LIGHT PIPES, THRU BEZEL, EMI SPRING

SIZE A2 | CAGE CODE 00779 | DRAWING NO C-2170708 | RESTRICTED TO -

CUSTOMER DRAWING | SCALE 3:1 | SHEET 5 OF 9 | REV B

1471-9 (3/11)

THIS DRAWING IS UNPUBLISHED. RELEASED FOR PUBLICATION 20
© COPYRIGHT 20 BY - ALL RIGHTS RESERVED.

LOC	DIST

REVISIONS

P	LTR	DESCRIPTION	DATE	DWN	APVD
	-	SEE SHEET 1	-	-	-

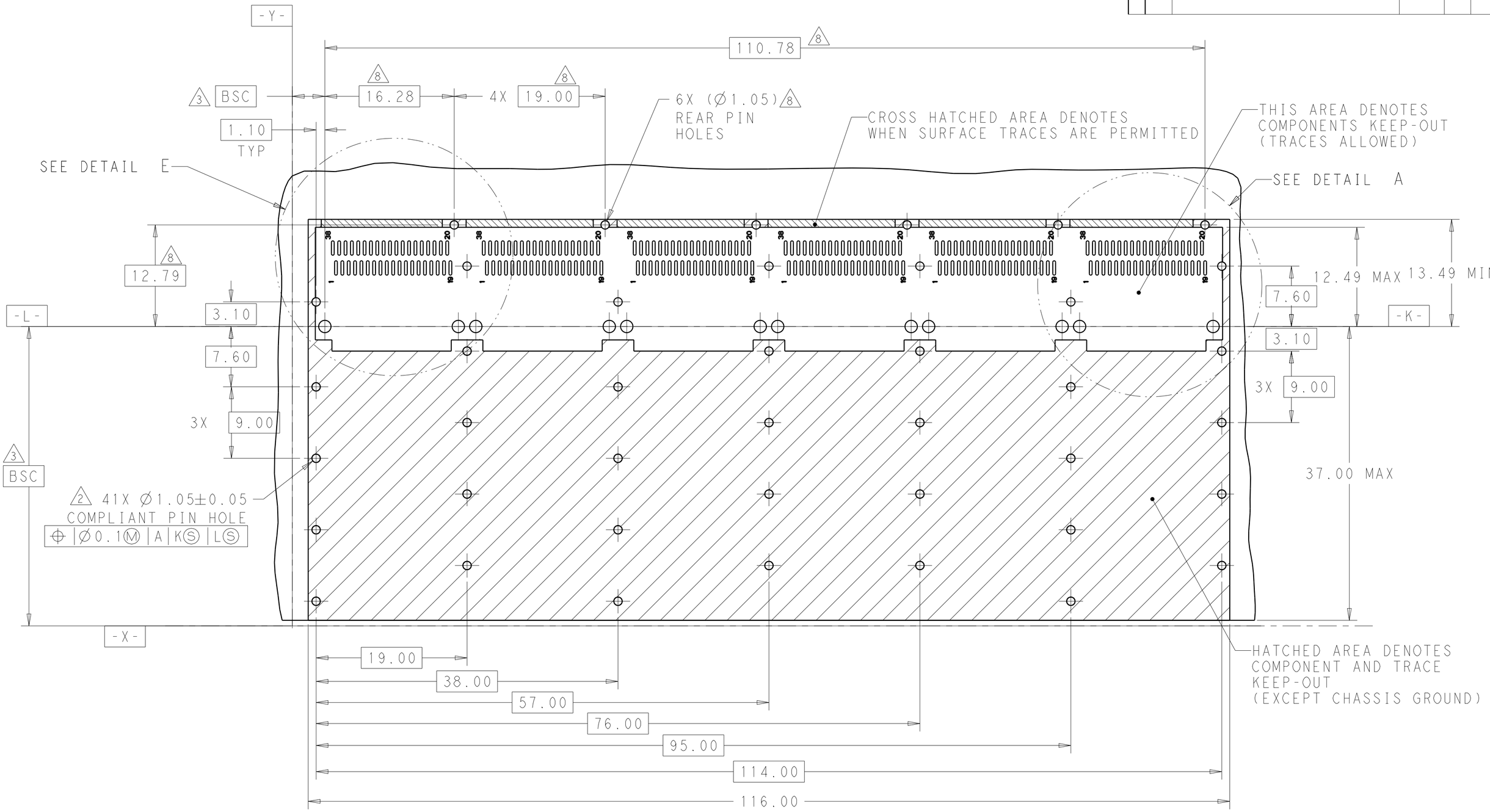

RECOMMENDED PCB LAYOUT
SINGLE TYPE
PCB TOLERANCE: ±0.05
SCALE 3:1

THIS DRAWING IS A CONTROLLED DOCUMENT.

DIMENSIONS: mm

TOLERANCES UNLESS OTHERWISE SPECIFIED:
0 PLC ±-
1 PLC ±0.25
2 PLC ±0.2
3 PLC ±-
4 PLC ±-
ANGLES ±-

MATERIAL: SEE NOTES material_2
FINISH: SEE NOTES finish_spec_2

DWN JASON YANG 24OCT2013
CHK SEAN HAN 02NOV2016
APVD -
PRODUCT SPEC 108-19428
APPLICATION SPEC 114-32023
WEIGHT -

TE Connectivity

NAME: CAGE ASSEMLBY, 1X6, QSFP28 WITH HEAT SINKS AND LIGHT PIPES, THRU BEZEL, EMI SPRING

SIZE	CAGE CODE	DRAWING NO	RESTRICTED TO
A2	00779	C-2170708	-

CUSTOMER DRAWING | SCALE 3:1 | SHEET 6 OF 9 | REV B

THIS DRAWING IS UNPUBLISHED. RELEASED FOR PUBLICATION 20
© COPYRIGHT 20 BY - ALL RIGHTS RESERVED.

LOC	DIST

REVISIONS

P	LTR	DESCRIPTION	DATE	DWN	APVD
	-	SEE SHEET 1	-	-	-

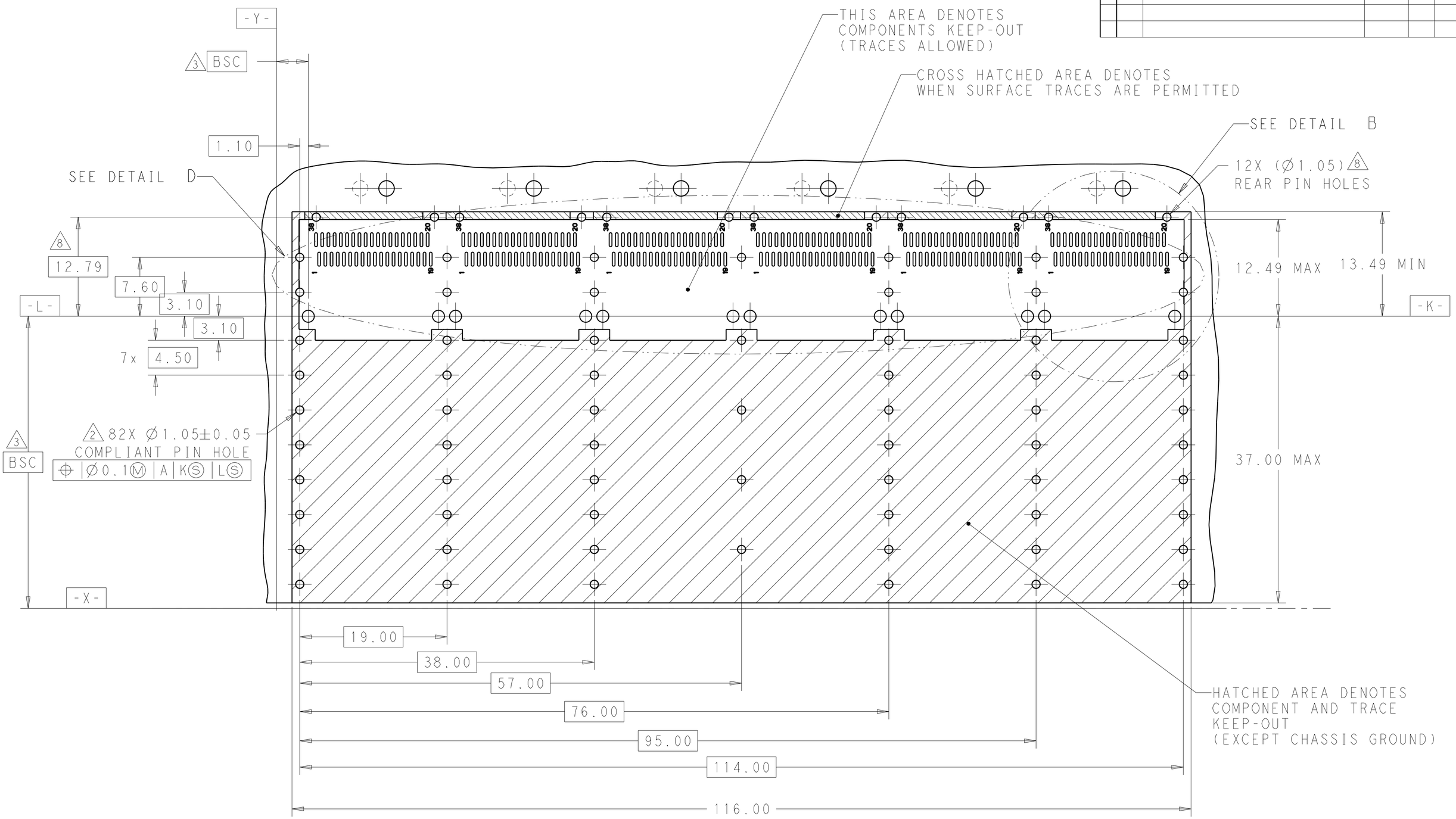

RECOMMENDED PCB LAYOUT
BELLY TO BELLY TYPE
PCB TOLERANCE: ±0.05
SCALE 3:1

THIS DRAWING IS A CONTROLLED DOCUMENT.

DIMENSIONS: mm

TOLERANCES UNLESS OTHERWISE SPECIFIED:
0 PLC ±-
1 PLC ±0.25
2 PLC ±0.2
3 PLC ±-
4 PLC ±-
ANGLES ±-

MATERIAL: SEE NOTES material_2
FINISH: SEE NOTES finish_spec_2

DWN JASON YANG 24OCT2013
CHK SEAN HAN 02NOV2016
APVD -
PRODUCT SPEC 108-19428
APPLICATION SPEC 114-32023
WEIGHT -

TE Connectivity

NAME: CAGE ASSEMLBY, 1X6, QSFP28 WITH HEAT SINKS AND LIGHT PIPES, THRU BEZEL, EMI SPRING

SIZE	CAGE CODE	DRAWING NO	RESTRICTED TO
A2	00779	C-2170708	-

CUSTOMER DRAWING | SCALE 3:1 | SHEET 7 OF 9 | REV B

THIS DRAWING IS UNPUBLISHED. RELEASED FOR PUBLICATION 20
© COPYRIGHT 20 BY - ALL RIGHTS RESERVED.

LOC	DIST

REVISIONS

P	LTR	DESCRIPTION	DATE	DWN	APVD
	-	SEE SHEET 1	-	-	-

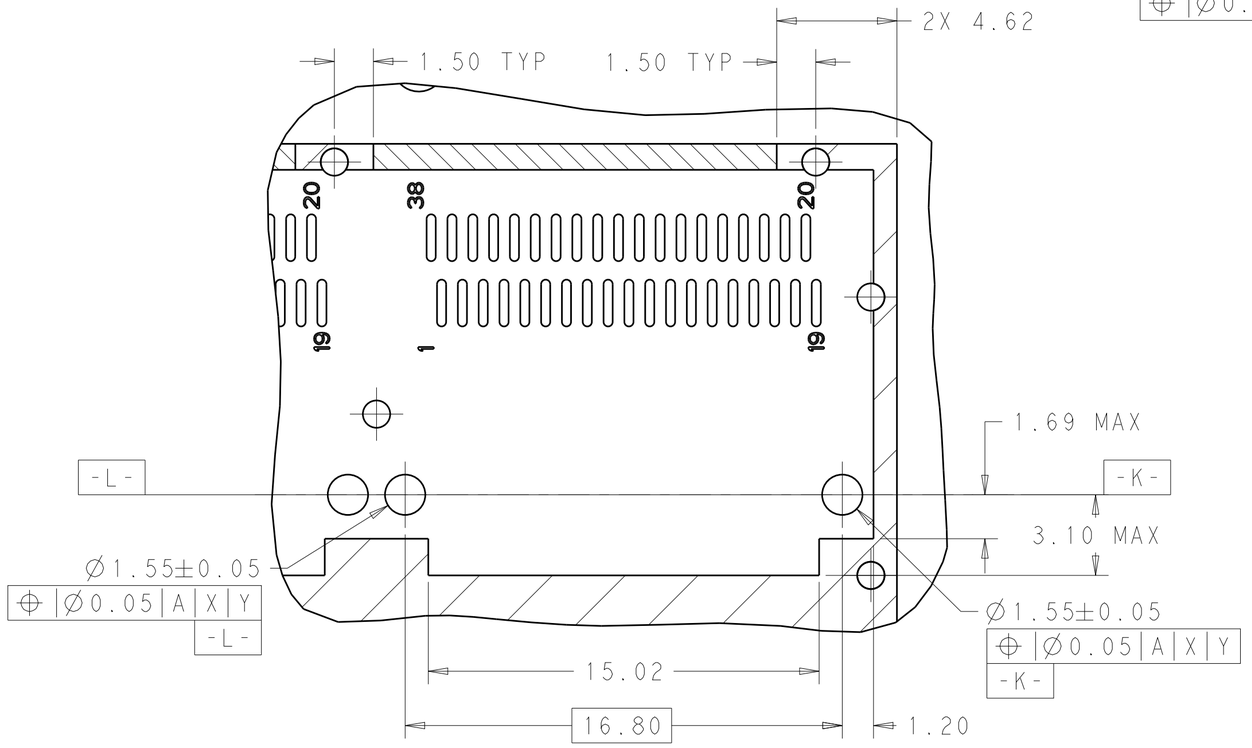

DETAIL A
SCALE 6:1

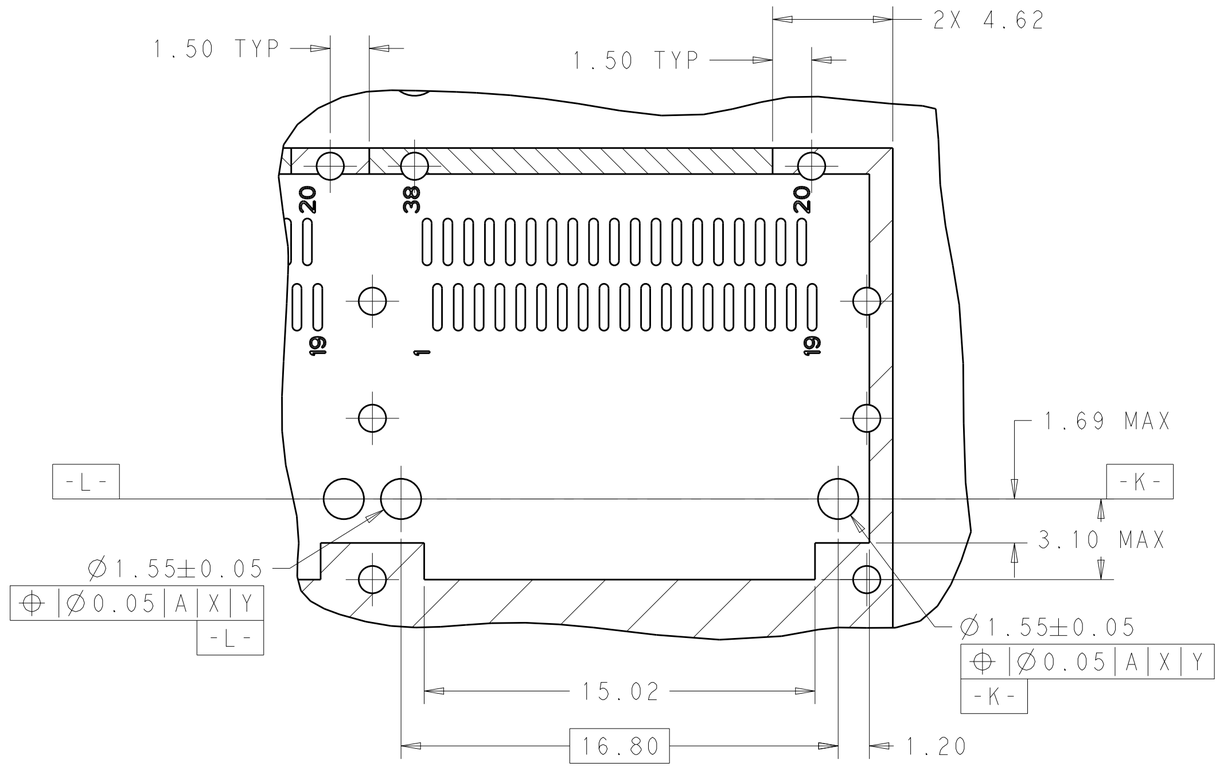

DETAIL B
SCALE 6:1

THIS DRAWING IS A CONTROLLED DOCUMENT.

DIMENSIONS: mm

TOLERANCES UNLESS OTHERWISE SPECIFIED:
0 PLC ±-
1 PLC ±0.25
2 PLC ±0.2
3 PLC ±-
4 PLC ±-
ANGLES ±-

MATERIAL: SEE NOTES material_2
FINISH: SEE NOTES finish_spec_2

DWN JASON YANG 24OCT2013
CHK SEAN HAN 02NOV2016
APVD -
PRODUCT SPEC 108-19428
APPLICATION SPEC 114-32023
WEIGHT -
CUSTOMER DRAWING

TE Connectivity

NAME: CAGE ASSEMLBY, 1X6, QSFP28 WITH HEAT SINKS AND LIGHT PIPES, THRU BEZEL, EMI SPRING

SIZE	CAGE CODE	DRAWING NO	RESTRICTED TO
A2	00779	C-2170708	-

SCALE 3:1 SHEET 8 OF 9 REV B

THIS DRAWING IS UNPUBLISHED. RELEASED FOR PUBLICATION 20
© COPYRIGHT 20 BY - ALL RIGHTS RESERVED.

LOC	DIST

REVISIONS

P	LTR	DESCRIPTION	DATE	DWN	APVD
	-	SEE SHEET 1	-	-	-

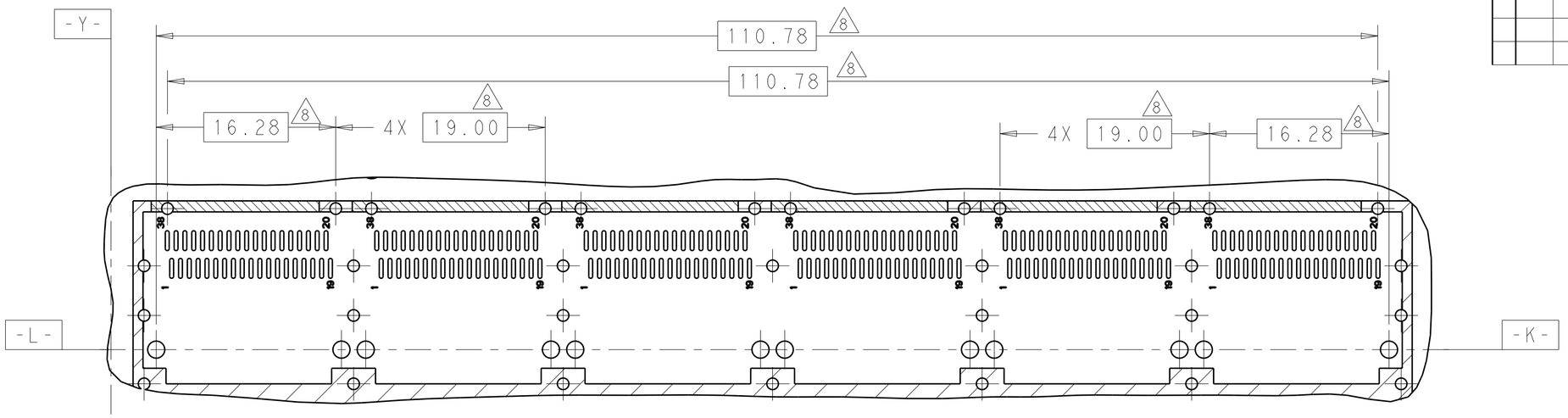

DETAIL D
SCALE 3:1

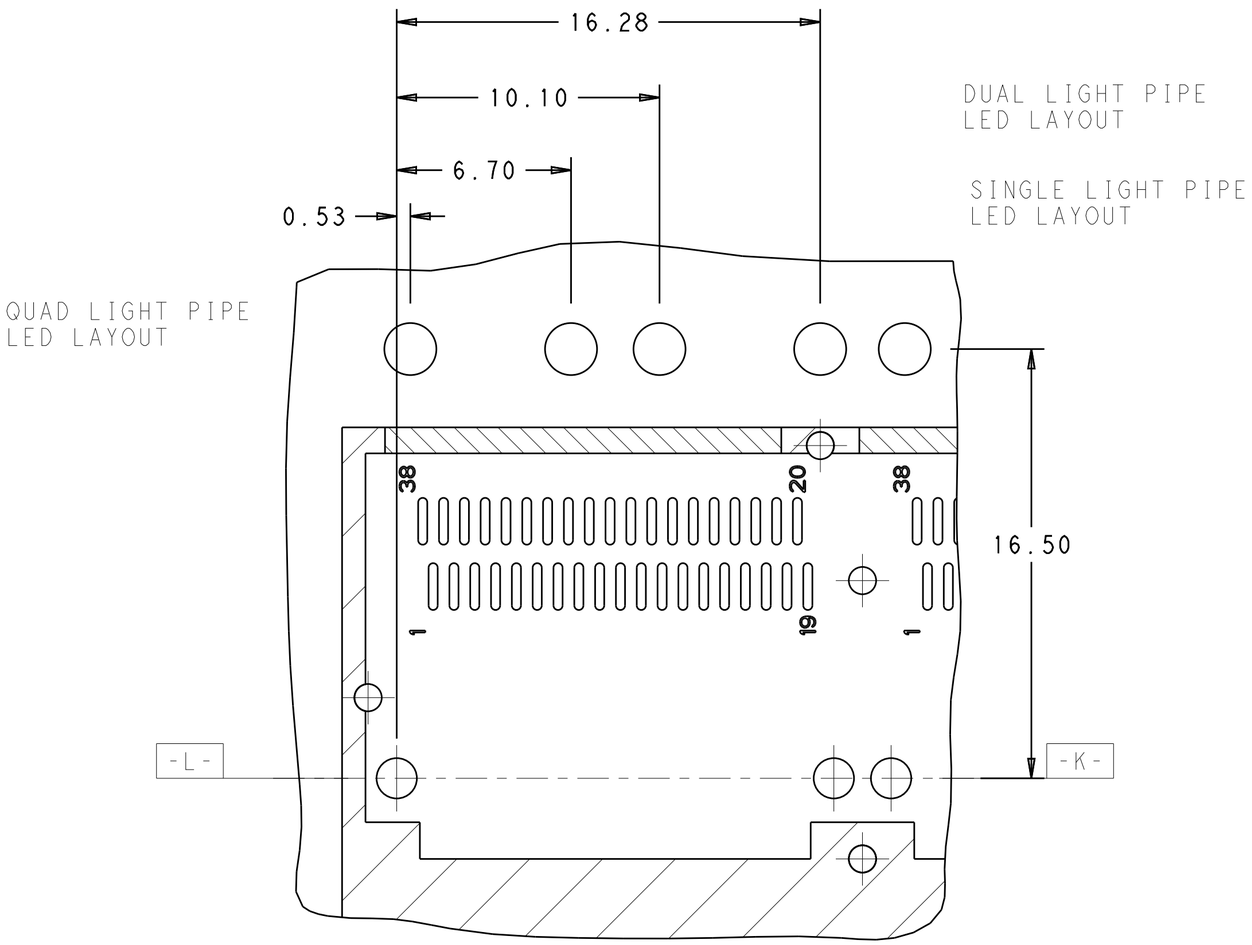

DETAIL E
SCALE 6:1

THIS DRAWING IS A CONTROLLED DOCUMENT.

DIMENSIONS: mm

TOLERANCES UNLESS OTHERWISE SPECIFIED:
0 PLC ±-
1 PLC ±0.25
2 PLC ±0.2
3 PLC ±-
4 PLC ±-
ANGLES ±-

MATERIAL: SEE NOTES material_2

FINISH: SEE NOTES finish_spec_2

DWN JASON YANG 24OCT2013
CHK SEAN HAN 02NOV2016
APVD -
PRODUCT SPEC 108-19428
APPLICATION SPEC 114-32023
WEIGHT -

TE Connectivity

NAME: CAGE ASSEMLBY, 1X6, QSFP28 WITH HEAT SINKS AND LIGHT PIPES, THRU BEZEL, EMI SPRING

SIZE	CAGE CODE	DRAWING NO	RESTRICTED TO
A2	00779	C-2170708	-

CUSTOMER DRAWING | SCALE 3:1 | SHEET 9 OF 9 | REV B

Mouser Electronics

Authorized Distributor

Click to View Pricing, Inventory, Delivery & Lifecycle Information:

TE Connectivity:

2-2170708-6