THIS DRAWING IS UNPUBLISHED. RELEASED FOR PUBLICATION 20
© COPYRIGHT 20 BY - ALL RIGHTS RESERVED.

LOC	DIST
CM	00

REVISIONS

P	LTR	DESCRIPTION	DATE	DWN	APVD
	A4	REVISED PER ECR-13-007047	16MAY2013	RS	DD
	A5	REVISED PER ECR-15-003564	13MAR2015	RS	DD
	B	REVISED PER ECR-15-004054	28JUL2015	RS	DD
	C	REVISED PER ECR-15-017995	18DEC2015	RS	DD

1. MATERIALS AND FINISH:
   - HOUSING: LCP, COLOR: NATURAL
   - CONTACTS: COPPER ALLOY, FINISH: Sn OVER Ni
2. COMPLY WITH DIRECTIVE 2002/95/EC (ROHS).
3. 18-24AWG SOLID OR STRANDED WIRE.
   PLEASE REFER TO APPLICATION SPEC 114-13266
   FOR RECOMMENDED STRAND COUNT.
   18AWG MAX INSULATION OD: 2.20
   20AWG MAX INSULATION OD: 1.90
   22AWG MAX INSULATION OD: 1.70
   24AWG MAX INSULATION OD: 1.45
4. PACKAGE IN TAPE AND REEL. PER EIA-481 SPECIFICATION;
   (EXCEPT 1 POSITION CONNECTOR).

5. WIRE SIZE MARKING IN APPROXIMATE LOCATION SHOWN.

6. DATUMS AND BASIC DIMENSIONS ESTABLISHED BY CUSTOMER.

7. COLOR CODE MARKING, STRAIGHT LINE.

8. 1 POSITION ASSEMBLY DOES NOT COMPLY WITH EIA 481 SPECIFICATION.

COLOR CODE	DIM D	WIRE SIZE	POSN	COLOR	PART NUMBER
RED	17.70	24 AWG	4	BLACK	7-2106003-4
	13.70	24 AWG	3	BLACK	7-2106003-3
	9.70	24 AWG	2	BLACK	7-2106003-2
	5.70	24 AWG	1	BLACK	7-2106003-1 (8)
GREEN	17.70	22 AWG	4	BLACK	6-2106003-4
	13.70	22 AWG	3	BLACK	6-2106003-3
	9.70	22 AWG	2	BLACK	6-2106003-2
	5.70	22 AWG	1	BLACK	6-2106003-1 (8)
BLUE	17.70	20 AWG	4	BLACK	5-2106003-4
	13.70	20 AWG	3	BLACK	5-2106003-3
	9.70	20 AWG	2	BLACK	5-2106003-2
	5.70	20 AWG	1	BLACK	5-2106003-1 (8)
YELLOW	17.70	18 AWG	4	BLACK	4-2106003-4
	13.70	18 AWG	3	BLACK	4-2106003-3
	9.70	18 AWG	2	BLACK	4-2106003-2
	5.70	18 AWG	1	BLACK	4-2106003-1 (8)
RED	17.70	24 AWG	4	NATURAL	3-2106003-4
	13.70	24 AWG	3	NATURAL	3-2106003-3
	9.70	24 AWG	2	NATURAL	3-2106003-2
	5.70	24 AWG	1	NATURAL	3-2106003-1 (8)
GREEN	17.70	22 AWG	4	NATURAL	2-2106003-4
	13.70	22 AWG	3	NATURAL	2-2106003-3
	9.70	22 AWG	2	NATURAL	2-2106003-2
	5.70	22 AWG	1	NATURAL	2-2106003-1 (8)
BLUE	17.70	20 AWG	4	NATURAL	1-2106003-4
	13.70	20 AWG	3	NATURAL	1-2106003-3
	9.70	20 AWG	2	NATURAL	1-2106003-2
	5.70	20 AWG	1	NATURAL	1-2106003-1 (8)
YELLOW	17.70	18 AWG	4	NATURAL	2106003-4
	13.70	18 AWG	3	NATURAL	2106003-3
	9.70	18 AWG	2	NATURAL	2106003-2
	5.70	18 AWG	1	NATURAL	2106003-1 (8)

THIS DRAWING IS A CONTROLLED DOCUMENT.

DIMENSIONS: mm

TOLERANCES UNLESS OTHERWISE SPECIFIED:
0 PLC ±-
1 PLC ±0.5
2 PLC ±0.13
3 PLC ±-
4 PLC ±-
ANGLES ±-

MATERIAL (1) -
FINISH (1) -

DWN C DAILY 09DEC2008
CHK J DYER 09DEC2008
APVD -
PRODUCT SPEC 108-2404
APPLICATION SPEC 114-13266
WEIGHT -

TE Connectivity

NAME ASSEMBLY, IDC SSL CONNECTOR, SMT, CLOSED END

SIZE	CAGE CODE	DRAWING NO	RESTRICTED TO
A2	00779	C-2106003	-

Customer Drawing | SCALE 2:1 | SHEET 1 OF 4 | REV C

1471-9 (3/11)

THIS DRAWING IS UNPUBLISHED. RELEASED FOR PUBLICATION 20
© COPYRIGHT 20 BY - ALL RIGHTS RESERVED.

LOC	DIST

REVISIONS

P	LTR	DESCRIPTION	DATE	DWN	APVD
	-	SEE SHEET 1	-	-	-

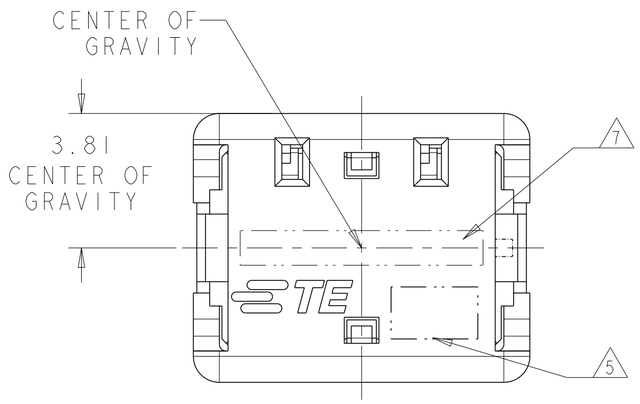

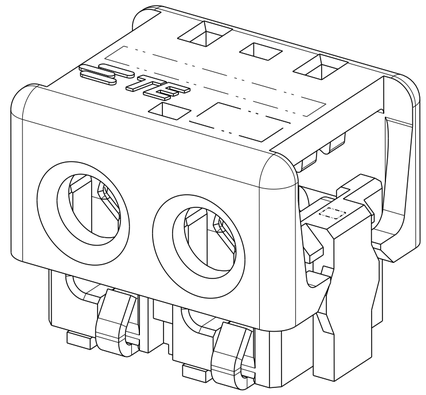

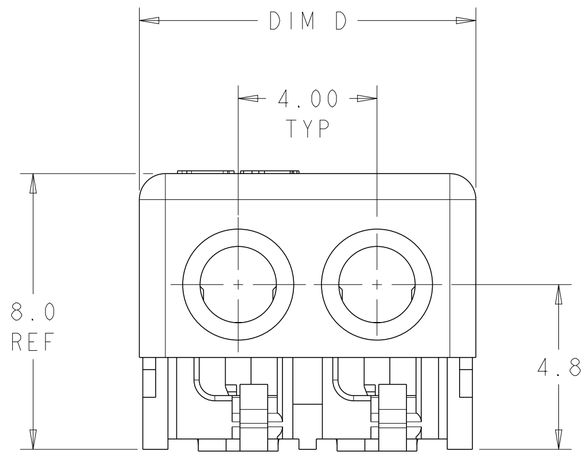

2 POSITION
SHOWN AS SHIPPED

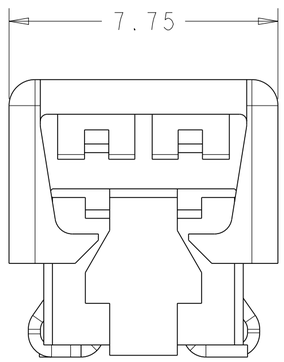

FOR 1 POSITION ONLY

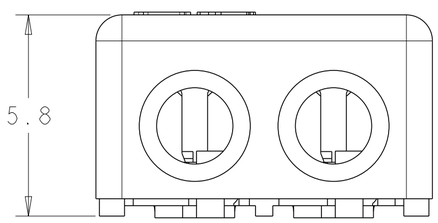

2 POSITION
SHOWN CLOSED
SCALE 8:1

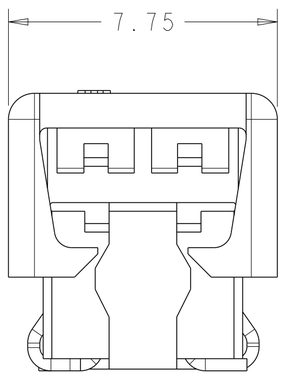

FOR 2, 3 AND 4 POSITIONS

THIS DRAWING IS A CONTROLLED DOCUMENT.

DIMENSIONS: mm

TOLERANCES UNLESS OTHERWISE SPECIFIED:

0 PLC	±-
1 PLC	±0.5
2 PLC	±0.13
3 PLC	±-
4 PLC	±-
ANGLES	±-

MATERIAL: - material_2

FINISH: - finish_spec_2

DWN C DAILY 09DEC2008
CHK J DYER 09DEC2008
APVD -
PRODUCT SPEC 108-2404
APPLICATION SPEC 114-13266
WEIGHT -

TE Connectivity

NAME: ASSEMBLY, IDC SSL CONNECTOR, SMT, CLOSED END

SIZE	CAGE CODE	DRAWING NO	RESTRICTED TO
A2	00779	C-2106003	-

Customer Drawing | SCALE 2:1 | SHEET 1 OF 4 | REV C

1471-9 (3/11)

THIS DRAWING IS UNPUBLISHED. RELEASED FOR PUBLICATION 20
© COPYRIGHT 20 BY - ALL RIGHTS RESERVED.

LOC	DIST

REVISIONS

P	LTR	DESCRIPTION	DATE	DWN	APVD
	-	SEE SHEET 1	-	-	-

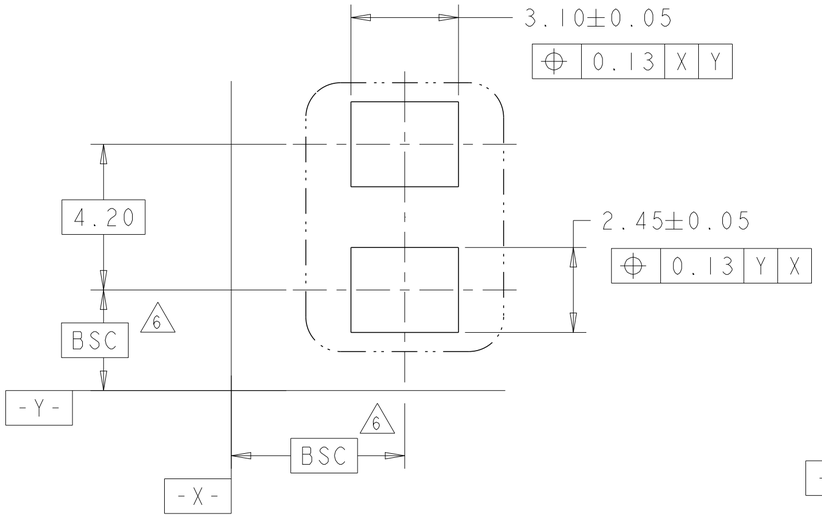

1 POSITION
RECOMMENDED PAD LAYOUT
SCALE 8:1

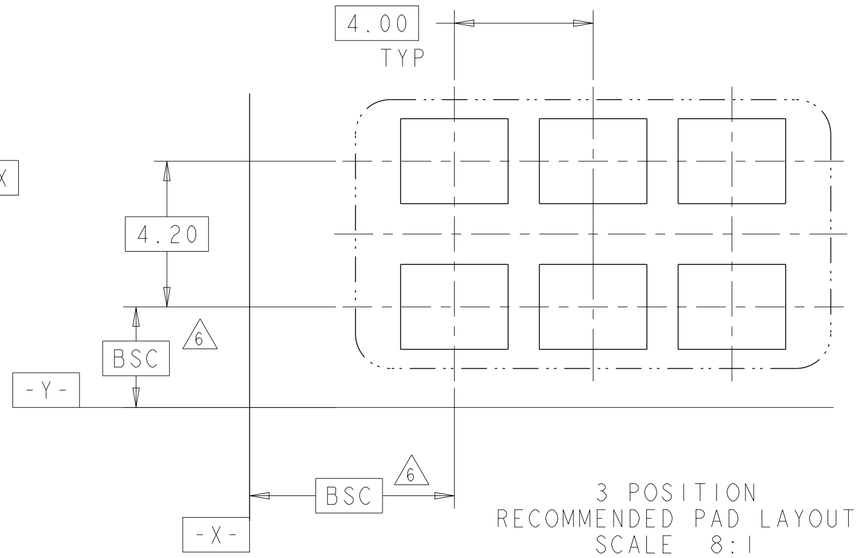

3 POSITION
RECOMMENDED PAD LAYOUT
SCALE 8:1

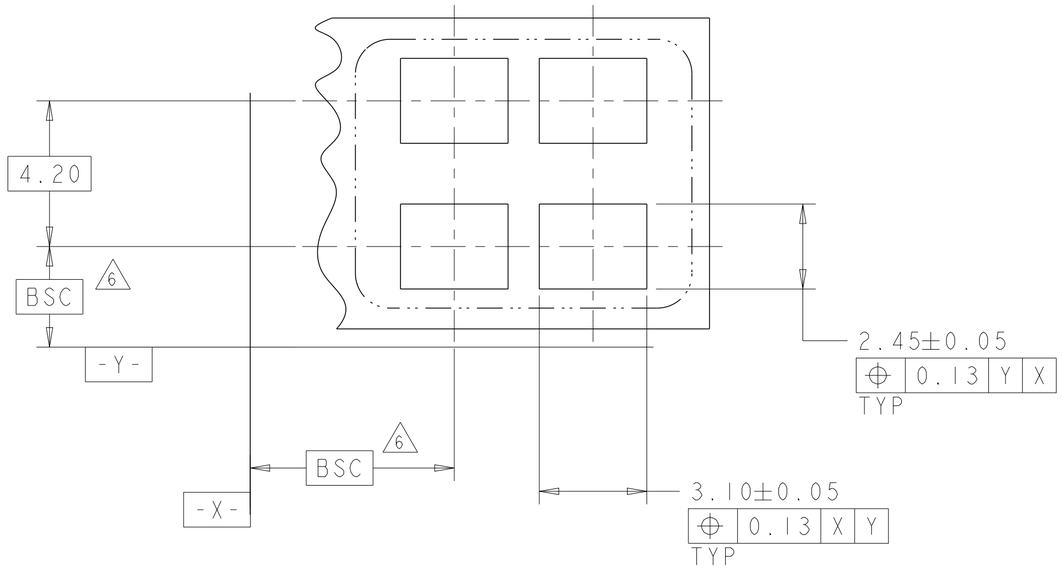

2 POSITION
RECOMMENDEDPAD LAYOUT
SCALE 8:1

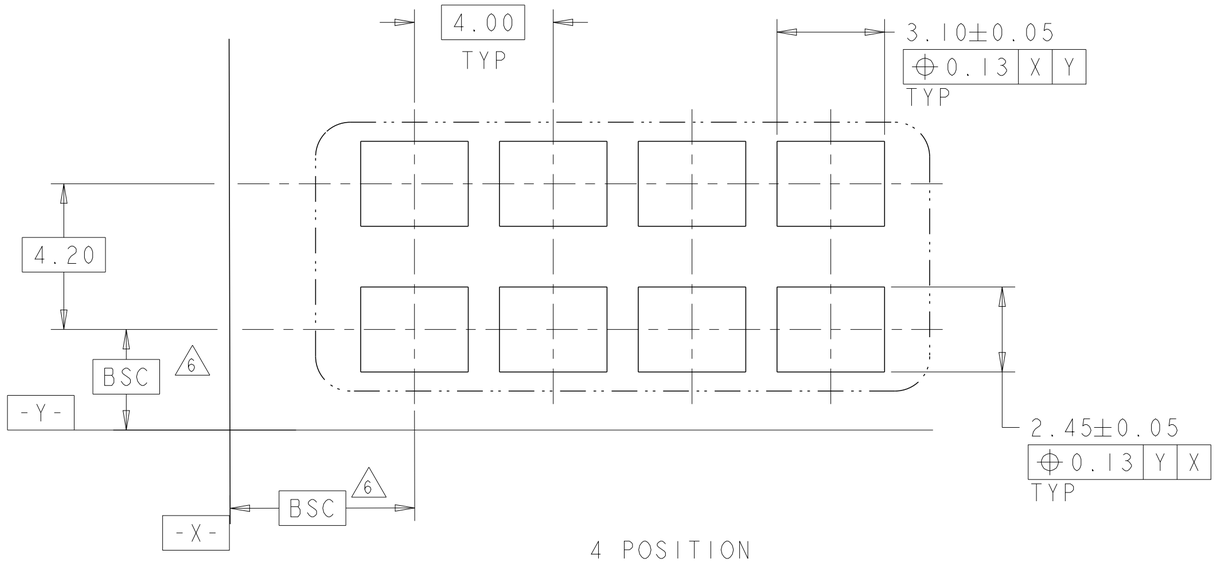

4 POSITION
RECOMMENDEDPAD LAYOUT
SCALE 8:1

THIS DRAWING IS A CONTROLLED DOCUMENT.

DIMENSIONS: mm

TOLERANCES UNLESS OTHERWISE SPECIFIED:
0 PLC ±-
1 PLC ±0.5
2 PLC ±0.13
3 PLC ±-
4 PLC ±-
ANGLES ±-

MATERIAL - material_2

FINISH - finish_spec_2

DWN C DAILY 09DEC2008
CHK J DYER 09DEC2008
APVD -
PRODUCT SPEC 108-2404
APPLICATION SPEC 114-13266
WEIGHT -

TE Connectivity

NAME ASSEMBLY, IDC SSL CONNECTOR, SMT, CLOSED END

SIZE	CAGE CODE	DRAWING NO	RESTRICTED TO
A2	00779	C-2106003	-

Customer Drawing | SCALE 2:1 | SHEET 1 OF 4 | REV C

1471-9 (3/11)

THIS DRAWING IS UNPUBLISHED. RELEASED FOR PUBLICATION 20
© COPYRIGHT 20 BY - ALL RIGHTS RESERVED.

LOC	DIST

REVISIONS

P	LTR	DESCRIPTION	DATE	DWN	APVD
	-	SEE SHEET 1	-	-	-

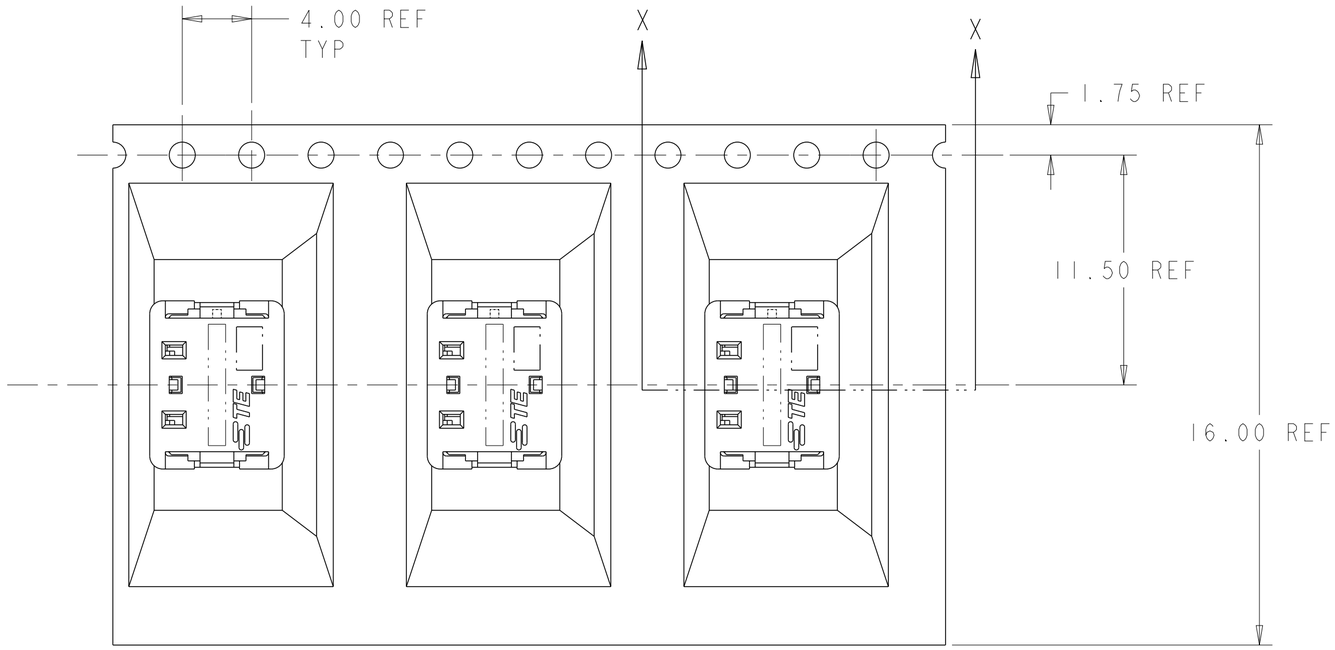

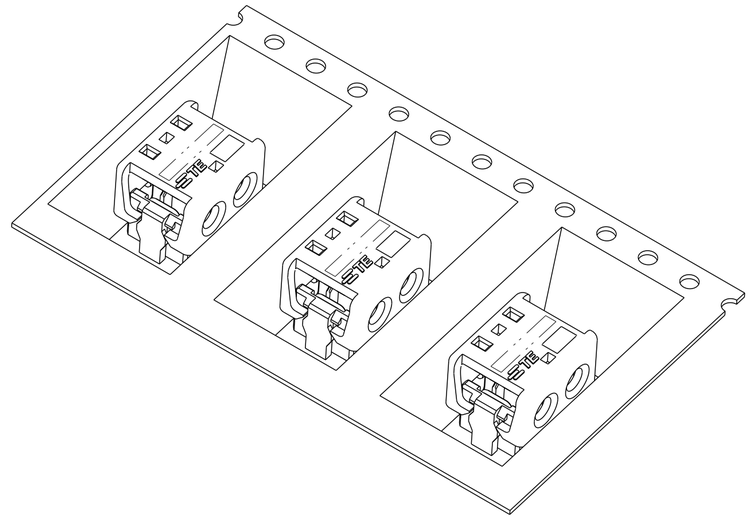

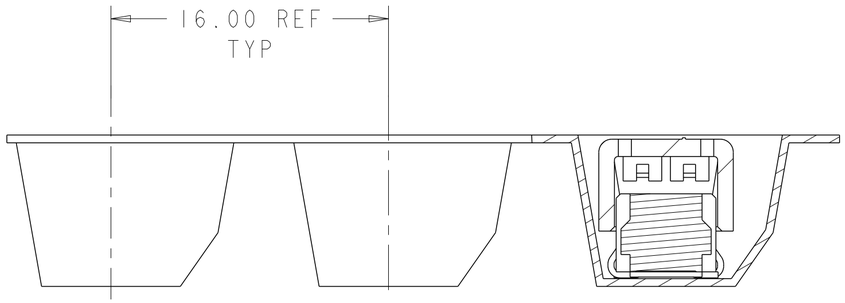

SECTION X-X

2106003-2 SHOWN IN POCKET TAPE

THIS DRAWING IS A CONTROLLED DOCUMENT.

DIMENSIONS: mm

TOLERANCES UNLESS OTHERWISE SPECIFIED:
0 PLC ±-
1 PLC ±0.5
2 PLC ±0.13
3 PLC ±-
4 PLC ±-
ANGLES ±-

MATERIAL - material_2

FINISH - finish_spec_2

DWN C DAILY 09DEC2008
CHK J DYER 09DEC2008
APVD -
PRODUCT SPEC 108-2404
APPLICATION SPEC 114-13266
WEIGHT -

TE Connectivity

NAME ASSEMBLY, IDC SSL CONNECTOR, SMT, CLOSED END

SIZE	CAGE CODE	DRAWING NO	RESTRICTED TO
A2	00779	C-2106003	-

Customer Drawing | SCALE 2:1 | SHEET 1 OF 4 | REV C

1471-9 (3/11)

Mouser Electronics

Authorized Distributor

Click to View Pricing, Inventory, Delivery & Lifecycle Information:

TE Connectivity:

1-2106003-3