THIS DRAWING IS UNPUBLISHED. RELEASED FOR PUBLICATION -,- .
© COPYRIGHT - BY TYCO ELECTRONICS CORPORATION. ALL RIGHTS RESERVED.

LOC	DIST
DF	XO

REVISIONS

P	LTR	DESCRIPTION	DATE	DWN	APVD
	A	RELEASED	6-7-07	CT	BM

ELECTRICAL

Nominal Impedance (Ohms)	50
Frequency Range (GHz) DC to	18
Volt Rating (VRMS MAX) @ Sea Level	500
VSWR	1.05+.005f(GHz) DC to 18 GHz
Insertion Loss (dB MAX)	$.03 \times \sqrt{f(GHz)}$
RF Leakage (dB MIN) (Fully Mated)	-(60-f(GHz))
Corona, 70,000 Ft (VRMS MIN)	335
Dielectric Withstanding Voltage (VRMS MIN) @ Sea Level	1000
Contact Resistance (Milliohms MAX) Center Contact	2.0
Outer Contact	2.0
RF High Potential @ Sea Level (VRMS MIN @ 5 MHz)	1000
I.R.(Megohms MIN)	5000

MECHANICAL

Interface Dimensions	Per OMNI-SPECTRA CATALOG
Force to Engage (In-Lbs MAX)	3
& Disengage (In-Lbs MAX)	1.5
Center Contact Captivation Axial (Lbs)	6.0
Weight (Grams)	TBD

ENVIRONMENTAL

TEMPERATURE RATING -65° TO +125°C

Vibration MIL-STD-202, Method 204, Condition D

Shock MIL-STD-202, Method 213, Condition I

Thermal Shock MIL-STD-202, Method 107, Condition B

Moisture Resistance MIL-STD-202, Method 106

Corrosion - MIL-STD-202, Method 101, Condition B

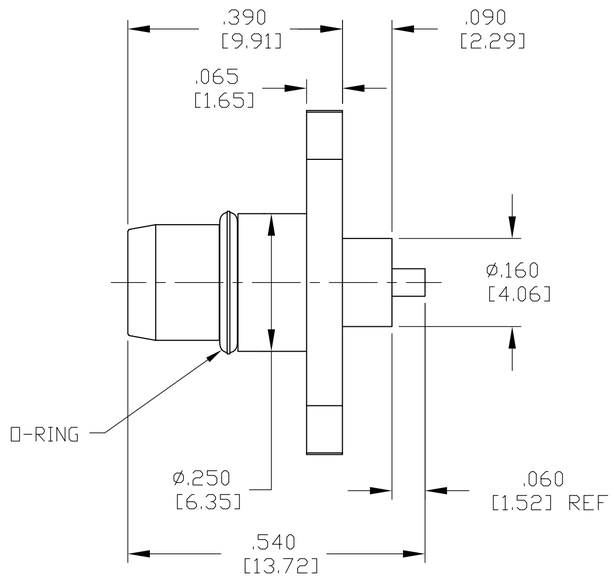

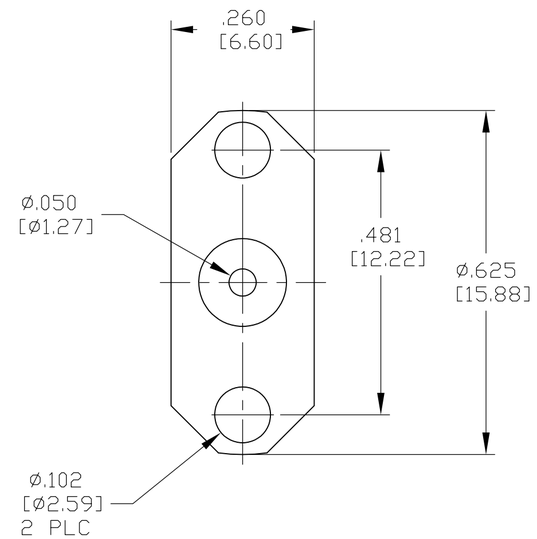

1996085

COMPONENT	MATERIAL	FINISH
HOUSING	STAINLESS STEEL PER ASTM-A484 AND ASTM-A582, TYPE 303	PASSIVATE PER ASTM-A380
DIELECTRIC	TFE FLUOROCARBON PER ASTM-D-1457	N/A
CENTER CONTACT	BERYLLIUM COPPER PER ASTM B 196, ALLOY C17300, CONDITION H	GOLD PLATE PER MIL-G-45204 OVER NICKEL PLATE PER QQ-N-290
"O" - RING	FLUOROSILICONE PER MIL-R-25988,CLASS 1,TYPE 1	N/A

1996085-1
PART NUMBER

THIS DRAWING IS A CONTROLLED DOCUMENT.

DIMENSIONS: INCHES [mm]

TOLERANCES UNLESS OTHERWISE SPECIFIED:
0 PLC ± -
1 PLC ± -
2 PLC ± -
3 PLC ± .005 [0.13]
4 PLC ± -
ANGLES ± -

MATERIAL: SEE TABLE
FINISH: SEE TABLE

DWN C.C.THOMAS 6-7-07
CHK B.MOYER 6-7-07
APVD B.MOYER 6-7-07
PRODUCT SPEC —
APPLICATION SPEC —
WEIGHT —

Tyco Electronics
Tyco Electronics Corporation
Harrisburg, PA 17105-3608

NAME: OSP 2 HOLE FLANGE MOUNT PLUG-STRAIGHT TERMINAL

SIZE A2 | CAGE CODE 00779 | DRAWING NO C-1996085 | RESTRICTED TO —

CUSTOMER DRAWING | SCALE 5:1 | SHEET 1 OF 1 | REV A

AMP 1471-9 REV 31MAR2000

07JUN2007 2:22pm us016412 H:\docmod\1996085_1_c.dwg

Mouser Electronics

Authorized Distributor

Click to View Pricing, Inventory, Delivery & Lifecycle Information:

TE Connectivity:

1996085-1