THIS DRAWING IS UNPUBLISHED. RELEASED FOR PUBLICATION 20
© COPYRIGHT 20 BY - ALL RIGHTS RESERVED.

LOC	DIST
AF	-

REVISIONS

P	LTR	DESCRIPTION	DATE	DWN	APVD
	A3	REVISED PER ECR-15-006926	05MAY15	JR	KR

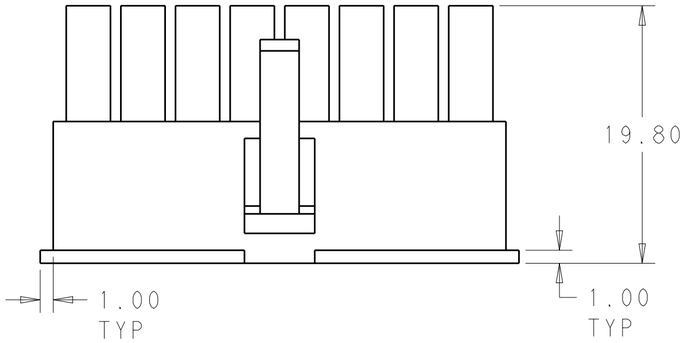

1. POLYAMIDE, UL94V-2, COLOR- WHITE
2. FLAMMABILITY V2 FOR THICKNESS 0.38mm, 1.5mm NAD 3.0mm PER IEC 60695-11-10.
3. GLOW-WIRE FLAMMABILITY (GWFI) 800°C FOR THICKNESS 0.38mm AND 0.75mm PER IEC 60695-2-12.
4. GLOW-WIRE FLAMMABILITY (GWFI) 960°C FOR THICKNESS 1.5mm AND 3.0mm PER IEC 60695-2-12.
5. GLOW-WIRE IGNITION (GWIT) 825°C FOR THICKNESS 0.38mm, 0.75mm, 1.5mm AND 3.0mm PER IEC 60695-2-13.
6. COMPLY WITH GLOW WIRE REQUIREMENTS FOR PARTS OF NON-METALLIC MATERIAL SUPPORTING A CURRENT-CARRYING CONNECTION DETAILED IN IEC 60335-1, SECTION 30(GWT).

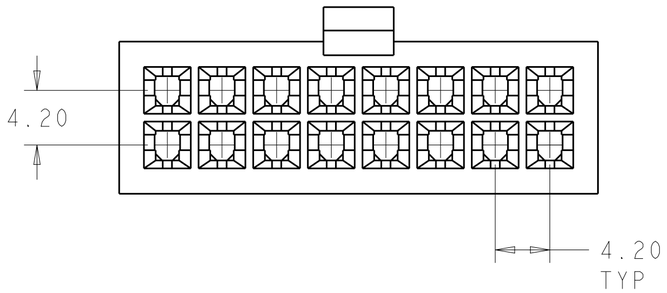

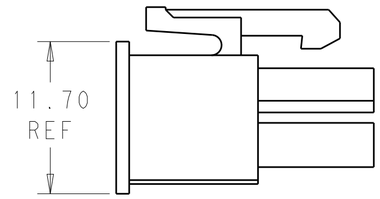

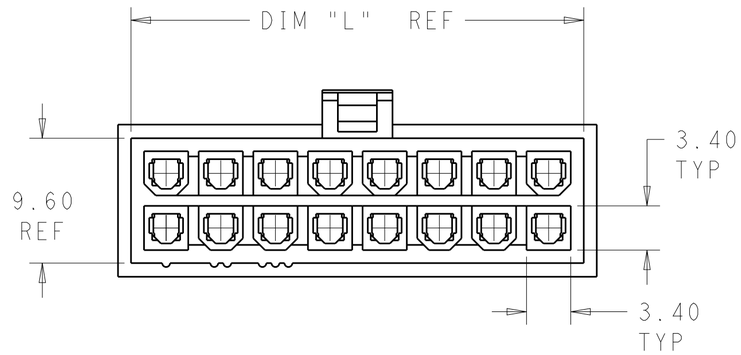

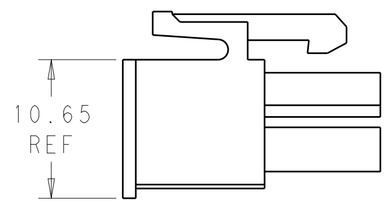

SCALE 3:1
FOR -2 PART ONLY

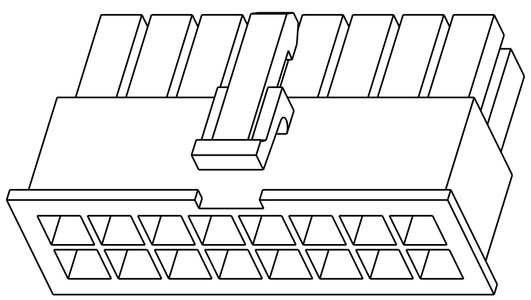

DIM L	NO. OF POS	PART NO.
51.60	24	2-1969603-4
47.40	22	2-1969603-2
43.20	20	2-1969603-0
39.00	18	1-1969603-8
34.80	16	1-1969603-6
30.60	14	1-1969603-4
26.40	12	1-1969603-2
22.20	10	1-1969603-0
18.00	8	1969603-8
13.80	6	1969603-6
9.60	4	1969603-4
5.40	2	1969603-2

THIS DRAWING IS A CONTROLLED DOCUMENT.

DIMENSIONS: mm

TOLERANCES UNLESS OTHERWISE SPECIFIED:
0 PLC ±-
1 PLC ±-
2 PLC ±0.25
3 PLC ±-
4 PLC ±-
ANGLES ±-
FINISH

MATERIAL 1

DWN JR RUTH 26SEPT13
CHK KURT RANDOLPH 26SEPT13
APVD KURT RANDOLPH 26SEPT13

PRODUCT SPEC -
APPLICATION SPEC -
WEIGHT -

TE Connectivity

NAME RECEPTACLE HOUSING, VAL-U-LOK, GLOW WIRE
-

SIZE	CAGE CODE	DRAWING NO	RESTRICTED TO
A2	00779	C-1969603	-

Customer Drawing | SCALE 3:1 | SHEET 1 OF 1 | REV A3

1471-9 (3/11)

Mouser Electronics

Authorized Distributor

Click to View Pricing, Inventory, Delivery & Lifecycle Information:

TE Connectivity:

1969603-6