THIS DRAWING IS UNPUBLISHED. RELEASED FOR PUBLICATION -,- .
© COPYRIGHT - By - ALL RIGHTS RESERVED.

REVISIONS

P	LTR	DESCRIPTION	DATE	DWN	APVD
	H	REVISED PER ECO-16-005106	28APR2016	NK	MZ
	J	REVISED PER ECO-17-013721	15NOV2017	RS	MZ
	K	REVISED PER ECO-18-002097	14FEB2018	RS	MZ

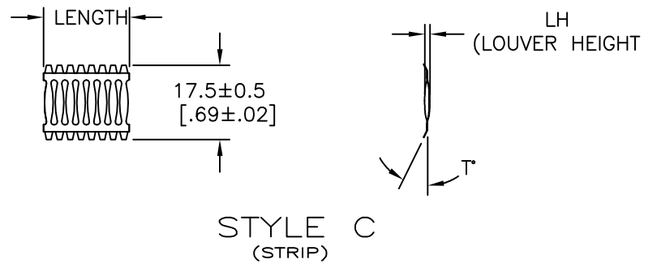

STYLE C
(STRIP)

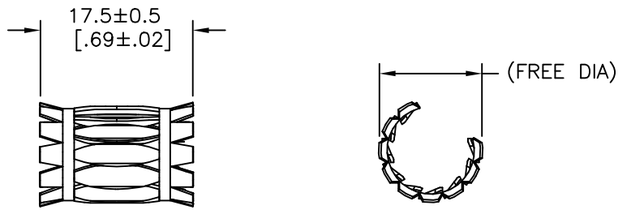

STYLE A
(FEMALE)

(FREE DIA)	LH	STYLE	T°	MATING PIN ϕ REF	NUM LOUV	PLATING	MAT'L NOTE	MAT'L THK	REF	PART NUMBER	
[.45]	[.050]	A	15	9.01[.355]	11	7-2	12	0.15[.006]	01210	5-192013-0	OBSOLETE
[.52]	[.046]	A	15	8.97[.353]	13	UNPL	12	0.08[.003]	01126	4-192013-9	
[.42]	[.050]	A	15	7.92[.312]	10	UNPL	13	0.15[.006]	01116	4-192013-8	14
[.42]	[.052]	A	15	7.92[.312]	10	7-2	12	0.20[.008]	01118	4-192013-7	OBSOLETE
[.42]	[.050]	A	15	7.92[.312]	10	6-2	12	0.15[.006]	01217	4-192013-6	OBSOLETE 14
[.42]	[.050]	A	15	7.92[.312]	10	7-2	12	0.15[.006]	01117	4-192013-5	
[.42]	[.050]	A	15	7.92[.312]	10	UNPL	12	0.15[.006]	01266	4-192013-4	OBSOLETE 14
[.42]	[.050]	A	15	7.92[.312]	10	7-2	12	0.10[.004]	01281	4-192013-3	OBSOLETE
		C	15	--	8	7-2	12	0.15[.006]	01030	4-192013-2	OBSOLETE
[1.48]	[.052]	A	45	31.8[1.250]	39	7-2	12	0.20[.008]	01219	4-192013-1	OBSOLETE
[1.48]	[.052]	A	45	31.8[1.250]	39	UNPL	12	0.20[.008]	01218	4-192103-0	14
[1.48]	[.050]	A	45	31.8[1.250]	39	7-2	12	0.15[.006]	01209	3-192013-9	OBSOLETE
[1.45]	[.050]	A	45	30.1[1.187]	38	7-2	12	0.15[.006]	01193	3-192013-8	
[1.21]	[.050]	A	45	26.2[1.032]	33	7-2	12	0.15[.006]	01214	3-192013-7	OBSOLETE 14
[1.15]	[.050]	A	45	25.0[.984]	31	7-2	12	0.15[.006]	01319	3-192013-6	OBSOLETE
[1.02]	[.050]	A	45	21.6[.850]	27	7-2	12	0.15[.006]	01208	3-192013-5	
[1.05]	[.050]	A	45	21.4[.842]	28	7-2	12	0.15[.006]	01165	3-192013-4	OBSOLETE
[.92]	[.052]	A	45	19.1[.750]	24	7-2	12	0.20[.008]	01300	3-192013-3	
--	[.050]	C	45	--	55	5-2	12	0.15[.006]	01041	3-192013-2	14
--	[.050]	C	45	--	55	UNPL	12	0.15[.006]	01044	3-192013-1	
										3-192013-0	OBSOLETE
--	[.050]	C	15	--	48	7-2	12	0.15[.006]	01043	2-192013-9	
--	[.050]	C	15	--	41	7-2	12	0.15[.006]	01027	2-192013-8	
--	[.050]	C	15	--	41	7-2	12	0.10[.004]	01028	2-192013-7	
	[.050]	C	15	--	40	7-2	12	0.15[.006]	01243	2-192013-6	OBSOLETE
--	[.050]	C	15	--	40	7-2	12	0.10[.004]	01047	2-192013-5	
--	[.050]	C	45	--	35	7-2	12	0.15[.006]	01033	2-192013-4	14
--	[.050]	C	15	--	35	7-2	12	0.15[.006]	01032	2-192013-3	
--	[.050]	C	15	--	35	7-2	12	0.10[.004]	01299	2-192013-2	
										2-192013-1	OBSOLETE
										2-192013-0	OBSOLETE
--	[.050]	C	15	--	33	7-2	12	0.15[.006]	01026	1-192013-9	OBSOLETE
--	[.050]	C	15	--	33	7-2	12	0.10[.004]	01025	1-192013-8	
										1-192013-7	14
		C	15	--	20	7-2	12	0.15[.006]	01035	1-192013-6	OBSOLETE
	[.050]	C	15	--	19	4	12	0.15[.006]	01051	1-192013-5	OBSOLETE 14
		C	15	--	19	7-2	12	0.15[.006]	01031	1-192013-4	OBSOLETE
--	[.050]	C	15	--	17	7-2	12	0.15[.006]	01059	1-192013-3	OBSOLETE
	[.050]	C	15	--	14	7-2	12	0.15[.006]	01053	1-192013-2	
--	[.050]	C	15	--	13	4	12	0.15[.006]	01065	1-192013-1	14
--	[.050]	C	15	--	13	7-2	12	0.15[.006]	01077	14 1-192013-0	
--	[.050]	C	15	--	12	7-2	12	0.15[.006]	01055	14 192013-9	
OBSOLETE										192013-8	
--	[.050]	C	15	--	12	1-3	12	0.10[.004]	01069	14 192013-7	
--	[.050]	C	15	--	11	7-2	12	0.15[.006]	01057	14 192013-6	
--	[.050]	C	15	--	10	4	12	0.15[.006]	01056	14 192013-5	
--	[.050]	C	15	--	10	7-2	12	0.15[.006]	--	14 192013-4	
--	[.050]	C	15	--	10	1-2	12	0.10[.004]	01046	14 192013-3	
--	[.050]	C	15	--	9	7-2	12	0.15[.006]	01081	14 192013-2	
--	[.050]	C	15	--	5	7-2	12	0.15[.006]	01045	14 192013-1	

1471-9 (1/15)

1 FINISH-GOLD PLATE 2.03-2.54µm [80-100µ"] THICK
2 FINISH-NICKEL PLATE 1.02-2.03µm [40-80µ"] THICK
3 FINISH-NICKEL PLATE 1.27-1.91µm [50-75µ"] THICK
4 FINISH-TIN PLATE 7.62-15.24µm [300-700µ"] THICK
5 FINISH-SILVER PLATE 18.78µm [700-1000µ"] THICK
6 FINISH-GOLD PLATE 0.25-0.51µm [10-20µ"] THICK
7 FINISH-SILVER PLATE 5.08-10.16µm [200-400µ"] THICK
8
9
10
11 PLATING NOTES ARE TO BE INTERPRETED AS FOLLOWS:
5-7 AS 5 OVER 7.
12 MATERIAL-CDA172 BeCu.
13 MATERIAL-STAINLESS STEEL.
14 OBSOLETE PARTS: OBSOLETE CIS STREAMLINING PER D.RENAUD/D.SINISI

THIS DRAWING IS A CONTROLLED DOCUMENT.

DIMENSIONS: mm [INCHES]

TOLERANCES UNLESS OTHERWISE SPECIFIED:
0 PLC ± -
1 PLC ± -
2 PLC ± 0.5 [.02]
3 PLC ± 0.25 [.010]
4 PLC ± -
ANGLES ± -

MATERIAL: SEE TABLE
FINISH: SEE TABLE

DWN RA JAYNE 07-01-91
CHK G.STEINHAUER 07-01-91
APVD G.STEINHAUER 07-01-91
PRODUCT SPEC —
APPLICATION SPEC —
WEIGHT —

TE Connectivity

NAME: CONTACT BAND,FEMALE

SIZE A2 | CAGE CODE 00779 | DRAWING NO C-192013 | RESTRICTED TO —

CUSTOMER DRAWING | SCALE NTS | SHEET 1 OF 2 | REV K

192013

THIS DRAWING IS UNPUBLISHED. RELEASED FOR PUBLICATION -,- .
© COPYRIGHT - By - ALL RIGHTS RESERVED.

(FREE DIA)	LH	STYLE	T $	MATING PIN t REF	NUM LOUV	PLATING	MAT'L NOTE	MAT'L THK	REF	PART NUMBER	
~~[.89]~~	~~[.052]~~	~~A~~	~~15~~	~~19.1[.750]~~	~~23~~	~~UNPL~~	~~12~~	~~0.20[.008]~~	~~01248~~	~~9-192013-9~~	14 OBSOLETE
~~[.92]~~	~~[.050]~~	~~A~~	~~15~~	~~19.1[.750]~~	~~24~~	~~UNPL~~	~~13~~	~~0.15[.006]~~	~~01203~~	~~9-192013-8~~	
~~[.92]~~	~~[.050]~~	~~A~~	~~15~~	~~19.1[.750]~~	~~24~~	~~6-2~~	~~12~~	~~0.15[.006]~~	~~01234~~	~~9-192013-7~~	
[.92]	[.050]	A	15	19.1[.750]	24	7-2	12	0.15[.006]	01154	9-192013-6	
~~[.92]~~	~~[.050]~~	~~A~~	~~15~~	~~19.1[.750]~~	~~24~~	~~UNPL~~	~~12~~	~~0.15[.006]~~	~~01152~~	~~9-192013-5~~	OBSOLETE 14
									--	9-192013-4	OBSOLETE
[.89]	[.050]	A	15	19.1[.750]	23	7-2	12	0.15[.006]	01255	9-192013-3	
~~[1.75]~~	~~[.050]~~	~~A~~	~~15~~	~~19.1[.750]~~	~~23~~	~~7-2~~	~~12~~	~~0.10[.004]~~	~~01279~~	~~9-192013-2~~	14 OBSOLETE
~~[.92]~~	~~[.046]~~	~~A~~	~~15~~	~~19.1[.750]~~	~~24~~	~~7-2~~	~~12~~	~~0.08[.003]~~	~~01151~~	~~9-192013-1~~	
~~[.92]~~	~~[.046]~~	~~A~~	~~15~~	~~19.1[.750]~~	~~24~~	~~UNPL~~	~~12~~	~~0.08[.003]~~	~~01297~~	~~9-192013-0~~	
[.85]	[.050]	A	15	17.4[.685]	22	7-2	12	0.15[.006]	01223	~~8-192013-9~~	OBSOLETE
~~[.80]~~	~~[.052]~~	~~A~~	~~15~~	~~15.88[.625]~~	~~20~~	~~7-2~~	~~12~~	~~0.20[.008]~~	~~01245~~	~~8-192013-8~~	14 OBSOLETE
~~[.80]~~	~~[.052]~~	~~A~~	~~15~~	~~15.88[.625]~~	~~20~~	~~UNPL~~	~~12~~	~~0.20[.008]~~	~~01289~~	~~8-192013-7~~	
[.76]	[.052]	A	15	15.88[.625]	19	7-2	12	0.20[.008]	01259	8-192013-6	OBSOLETE
~~[.76]~~	~~[.052]~~	~~A~~	~~15~~	~~15.88[.625]~~	~~19~~	~~UNPL~~	~~12~~	~~0.20[.008]~~	~~01258~~	~~8-192013-5~~	14 OBSOLETE
~~[.83]~~	~~[.050]~~	~~A~~	~~15~~	~~15.88[.625]~~	~~21~~	~~7-2~~	~~12~~	~~0.15[.006]~~	~~01207~~	~~8-192013-4~~	
~~[.80]~~	~~[.050]~~	~~A~~	~~15~~	~~15.88[.625]~~	~~20~~	~~6-2~~	~~12~~	~~0.15[.006]~~	~~01317~~	~~8-192013-3~~	
[.80]	[.050]	A	15	15.88[.625]	20	7-2	12	0.15[.006]	01148	8-192013-2	
~~[.76]~~	~~[.050]~~	~~A~~	~~15~~	~~15.88[.625]~~	~~19~~	~~7-2~~	~~12~~	~~0.15[.006]~~	~~01311~~	~~8-192013-1~~	14 OBSOLETE
~~[1.50]~~	~~[.050]~~	~~A~~	~~15~~	~~15.88[.625]~~	~~20~~	~~7-2~~	~~12~~	~~0.10[.004]~~	~~01273~~	~~8-192013-0~~	
~~[.80]~~	~~[.050]~~	~~A~~	~~15~~	~~15.57[.613]~~	~~20~~	~~7-2~~	~~12~~	~~0.15[.006]~~	~~01202~~	~~7-192013-9~~	
~~[.73]~~	~~[.052]~~	~~A~~	~~15~~	~~14.27[.562]~~	~~18~~	~~7-2~~	~~12~~	~~0.20[.008]~~	~~01143~~	~~7-192013-8~~	
~~[.45]~~	~~[.050]~~	~~A~~	~~15~~	~~9.01[.355]~~	~~11~~	~~UNPL~~	~~12~~	~~0.15[.006]~~		~~7-192013-7~~	
[.73]	[.050]	A	15	14.0[.551]	18	7-2	12	0.15[.006]	01264	7-192013-6	
[.70]	[.050]	A	15	14.0[.551]	17	7-2	12	0.15[.006]	01141	~~7-192013-5~~	OBSOLETE
~~[.69]~~	~~[.052]~~	~~A~~	~~15~~	~~12.7[.500]~~	~~16~~	~~7-2~~	~~12~~	~~0.20[.008]~~	~~01137~~	~~7-192013-4~~	14 OBSOLETE
~~[.69]~~	~~[.052]~~	~~A~~	~~15~~	~~12.7[.500]~~	~~16~~	~~UNPL~~	~~12~~	~~0.20[.008]~~	~~01247~~	~~7-192013-3~~	
~~[.69]~~	~~[.050]~~	~~A~~	~~15~~	~~12.7[.500]~~	~~16~~	~~UNPL~~	~~13~~	~~0.15[.006]~~	~~01244~~	~~7-192013-2~~	
[.69]	[.050]	A	15	12.7[.500]	16	7-2	12	0.15[.006]	01206	7-192013-1	
~~[.69]~~	~~[.046]~~	~~A~~	~~15~~	~~12.7[.500]~~	~~16~~	~~7-2~~	~~12~~	~~0.08[.003]~~	~~01275~~	~~7-192013-0~~	OBSOLETE 14
[.64]	[.052]	A	15	11.99[.472]	15	7-2	12	0.20[.008]	01304	6-192013-9	OBSOLETE
~~[.55]~~	~~[.050]~~	~~A~~	~~15~~	~~11.99[.472]~~	~~14~~	~~UNPL~~	~~13~~	~~0.15[.006]~~	~~01073~~	~~6-192013-8~~	OBSOLETE 14
[.64]	[.050]	A	15	11.99[.472]	15	7-2	12	0.15[.006]	01135	6-192013-7	
~~[.64]~~	~~[.050]~~	~~A~~	~~15~~	~~11.99[.472]~~	~~15~~	~~UNPL~~	~~12~~	~~0.15[.006]~~	~~01134~~	~~6-192013-6~~	14 OBSOLETE
~~[1.25]~~	~~[.050]~~	~~A~~	~~15~~	~~11.99[.472]~~	~~15~~	~~7-2~~	~~12~~	~~0.10[.004]~~	~~01286~~	~~6-192013-5~~	
~~[.80]~~	~~[.050]~~	~~A~~	~~15~~	~~15.88[.625]~~	~~20~~	~~UNPL~~	~~--~~	~~0.15[.006]~~	~~--~~	~~6-192013-4~~	
~~[.67]~~	~~[.046]~~	~~A~~	~~15~~	~~12.7[.500]~~	~~16~~	~~UNPL~~	~~--~~	~~0.08[.003]~~	~~--~~	~~6-192013-3~~	
~~[.53]~~	~~[.050]~~	~~A~~	~~15~~	~~10.0[.394]~~	~~13~~	~~UNPL~~	~~--~~	~~0.15[.006]~~		~~6-192013-2~~	
~~[.55]~~	~~[.052]~~	~~A~~	~~15~~	~~11.1[.437]~~	~~14~~	~~7-2~~	~~12~~	~~0.20[.008]~~	~~01131~~	~~6-192013-1~~	
~~[.55]~~	~~[.050]~~	~~A~~	~~15~~	~~11.1[.437]~~	~~14~~	~~UNPL~~	~~13~~	~~0.15[.006]~~	~~01246~~	~~6-192013-0~~	
[.55]	[.050]	A	15	11.1[.437]	14	7-2	12	0.15[.006]	01211	5-192013-9	
[.55]	[.050]	A	15	11.02[.434]	14	6-2	12	0.15[.006]	01128	5-192013-8	
~~[.55]~~	~~[.050]~~	~~A~~	~~15~~	~~11.02[.434]~~	~~14~~	~~UNPL~~	~~12~~	~~0.15[.006]~~	~~01216~~	~~5-192013-7~~	14 OBSOLETE
~~[.52]~~	~~[.050]~~	~~A~~	~~15~~	~~10.0[.394]~~	~~13~~	~~6-2~~	~~12~~	~~0.15[.006]~~	~~01272~~	~~5-192013-6~~	
[.52]	[.050]	A	15	10.0[.394]	13	7-2	12	0.15[.006]	01205	5-192013-5	OBSOLETE
[.50]	[.050]	A	15	9.53[.375]	12	7-2	12	0.15[.006]	01124	5-192013-4	
~~[.48]~~	~~[.050]~~	~~A~~		~~9.53[.375]~~	~~12~~	~~7-2~~	~~12~~	~~0.10[.004]~~	~~01268~~	~~5-192013-3~~	14 OBSOLETE
~~[.48]~~	~~[.052]~~	~~A~~	~~15~~	~~9.07[.357]~~	~~12~~	~~7-2~~	~~12~~	~~0.20[.008]~~	~~01122~~	~~5-192013-2~~	
~~[.45]~~	~~[.050]~~	~~A~~	~~15~~	~~9.01[.355]~~	~~11~~	~~6-2~~	~~12~~	~~0.15[.006]~~	~~01121~~	~~5-192013-1~~	

REVISIONS					
P	LTR	DESCRIPTION	DATE	DWN	APVD
	–	SEE SHEET 1	–	–	–

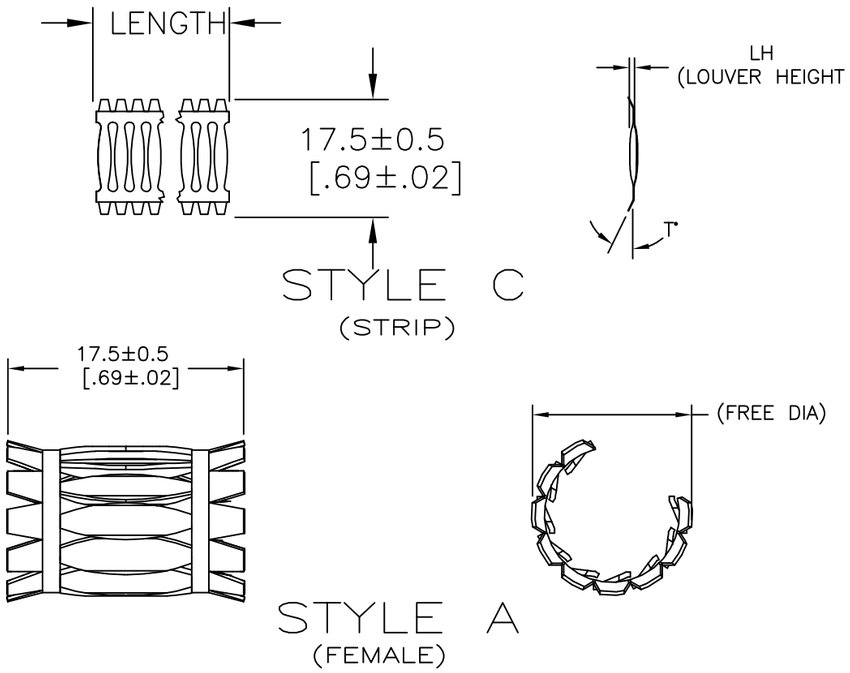

192013

THIS DRAWING IS A CONTROLLED DOCUMENT.

DIMENSIONS: mm [INCHES]

TOLERANCES UNLESS OTHERWISE SPECIFIED:
0 PLC ± –
1 PLC ± –
2 PLC ± 0.5 [.02]
3 PLC ± 0.25 [.010]
4 PLC ± –
ANGLES ± –

MATERIAL: SEE TABLE
FINISH: SEE TABLE

DWN RA JAYNE 07-01-91
CHK G.STEINHAUER 07-01-91
APVD G.STEINHAUER 07-01-91
PRODUCT SPEC –
APPLICATION SPEC –
WEIGHT –

TE Connectivity

NAME: CONTACT BAND,FEMALE

SIZE	CAGE CODE	DRAWING NO	RESTRICTED TO
A2	00779	C-192013	–

CUSTOMER DRAWING | SCALE NTS | SHEET 2 OF 2 | REV K

Mouser Electronics

Authorized Distributor

Click to View Pricing, Inventory, Delivery & Lifecycle Information:

TE Connectivity:

5-192013-4