THIS DRAWING IS UNPUBLISHED. RELEASED FOR PUBLICATION -
© COPYRIGHT - BY - ALL RIGHTS RESERVED.

LOC	DIST
-	-

REVISIONS

P	LTR	DESCRIPTION	DATE	DWN	APVD
	G	REV PER ECO 13-013890	9-16-13	CT	KH

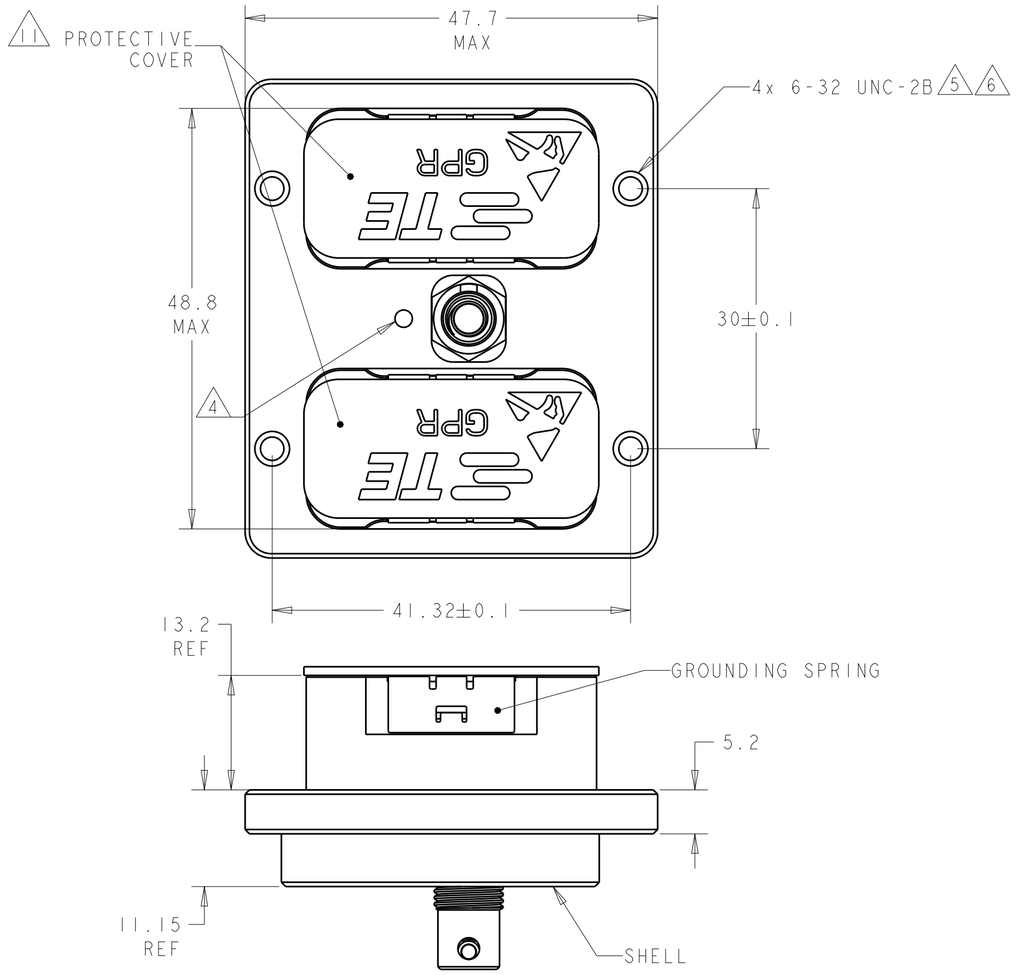

1. SHELL: ALUMINUM ALLOY 6061 T651
   INSERT RETENTION CLIP & GROUNDING SPRING: COPPER ALLOY PER ASTM B194
   JACKNUT & RETAINING NUT: STAINLESS STEEL PER AISI 316
   JACKNUT SPRING: STAINLESS STEEL PER AISI 302.
   PROTECTIVE COVER: ANTI-STATIC THERMOPLASTIC ELASTOMER PER ASTM D5593
2. SHELL: ELETROLESS NICKEL PER SAE AMS-C-26074, CLASS 1.
   GROUNDING SPRING: ELECTROLYTIC NICKEL PER SAE AMS-QQ-290
3. DATE CODE - YEAR & WEEK (YY WW).
4. INDEXING POINT FOR POLARIZATION.
5. 6-32 SCREWS ARE REQUIRED FOR PANEL MOUNTING (NOT INCLUDED).
   SCREW HEAD DIAMETER: 6 MAX
   RECOMMENDED TORQUE 1.1 N-m [10 lb-in] MIN
6. 6-32 THREADED HOLES ARE SELF-LOCKING, HAVING THE SPIRALOCK® THREAD FORM.
   SPIRALOCK® IS A REGISTERED TRADEMARK OF SPIRALOCK CORPORATION.
7. SHELL CAVITIES FOR GPRB SERIES INSERTS WITH KEYING CODE A.
8. THE JACKNUT & RETAINING NUT ARE PRE-ASSEMBLED TO THE SHELL. THESE ARE SHOWN UNASSEMBLED FOR CLARITY.
9. POLARIZATION FEATURE TO PREVENT FRONT PANEL MOUNTING.
10. PANEL THICKNESS: 5 MAX.
11. COVERS ARE NOT INCLUDED WITH 1811648-1;
    COVERS ARE INCLUDED WITH 1811648-2;
    COVERS MAY BE ORDERED SEPARATELY AS TYCO PART NUMBER 1877329-1.

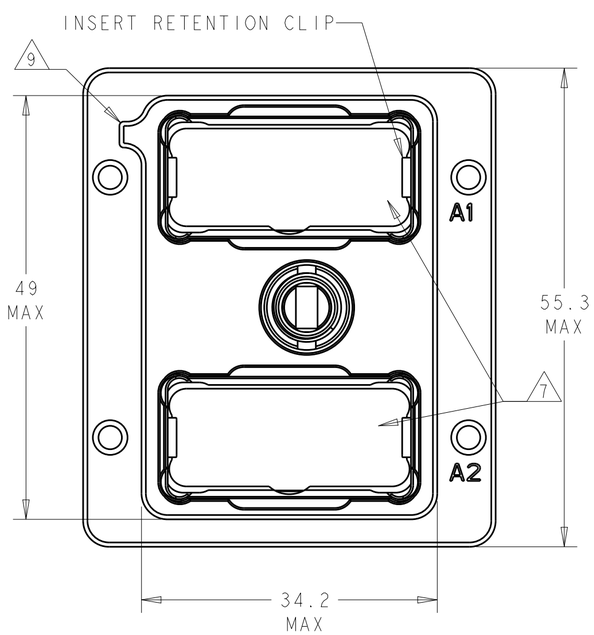

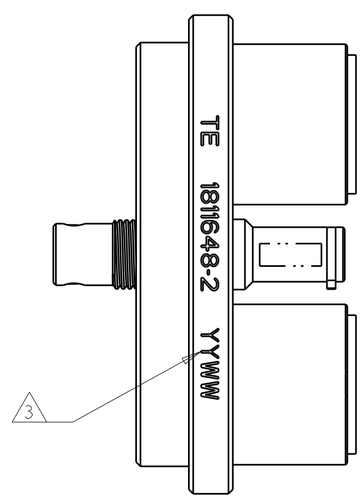

P/N 1811648-2 SHOWN

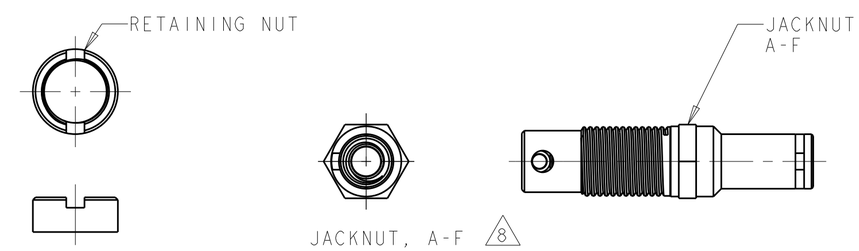

COMMENTS	PART NUMBER
INCLUDES PROTECTIVE COVERS	1811648-2
WITHOUT PROTECTIVE COVER	1811648-1

THIS DRAWING IS A CONTROLLED DOCUMENT.

DIMENSIONS: mm

TOLERANCES UNLESS OTHERWISE SPECIFIED:
0 PLC ±0.2
1 PLC ±0.2
2 PLC ±0.2
3 PLC ±-
4 PLC ±-
ANGLES ±-

MATERIAL 1 -
FINISH 2 -

DWN BW 10AUG05
CHK JPM 10AUG05
APVD JPM 10AUG05
PRODUCT SPEC -
APPLICATION SPEC -
WEIGHT -

TE Connectivity

NAME RECEPTACLE SHELL ASSEMBLY, VERTICAL, GPRB2
-

SIZE A2 | CAGE CODE 00779 | DRAWING NO C-1811648 | RESTRICTED TO -

CUSTOMER DRAWING | SCALE 2:1 | SHEET 1 OF 2 | REV G

THIS DRAWING IS UNPUBLISHED. RELEASED FOR PUBLICATION -
© COPYRIGHT - BY - ALL RIGHTS RESERVED.

LOC	DIST
-	-

REVISIONS

P	LTR	DESCRIPTION	DATE	DWN	APVD
	-	SEE SHEET 1	-	-	-

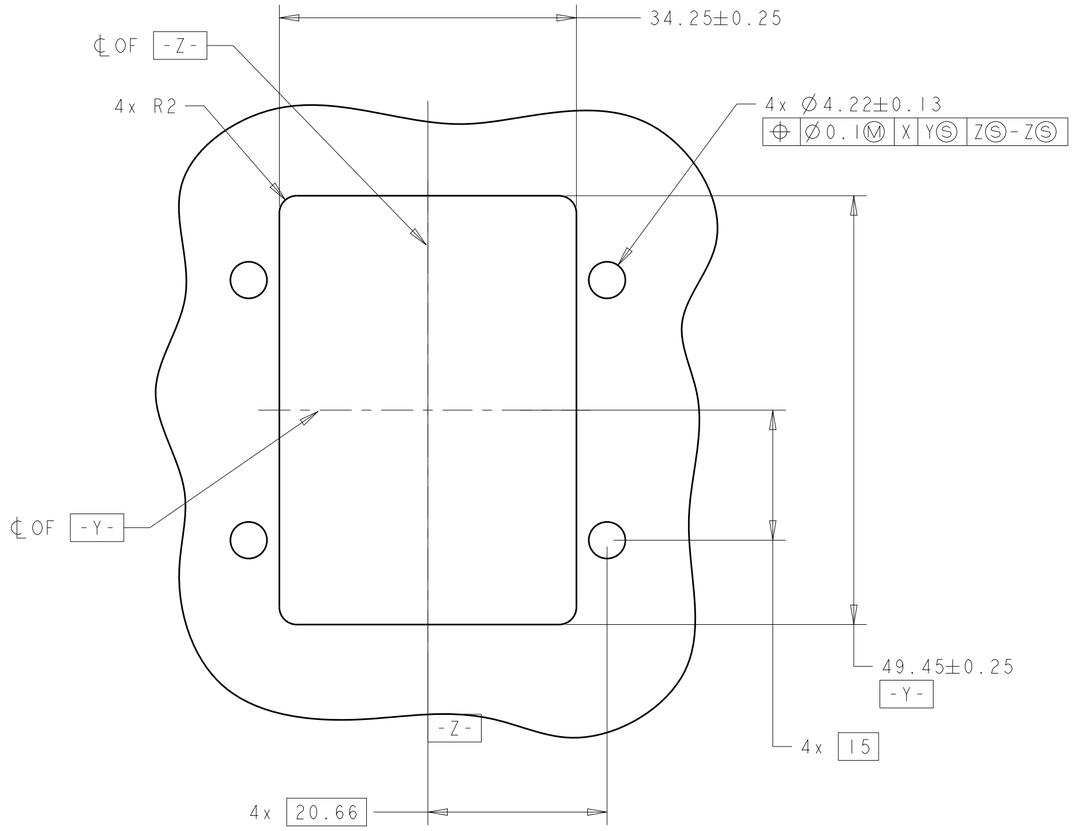

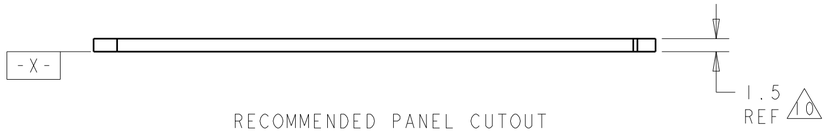

RECOMMENDED PANEL CUTOUT

THIS DRAWING IS A CONTROLLED DOCUMENT.

DIMENSIONS: mm

TOLERANCES UNLESS OTHERWISE SPECIFIED:

0 PLC	±0.2
1 PLC	±0.2
2 PLC	±0.2
3 PLC	±-
4 PLC	±-
ANGLES	±-

MATERIAL -

FINISH -

DWN	BW	10AUG05
CHK	JPM	10AUG05
APVD	JPM	10AUG05

PRODUCT SPEC -

APPLICATION SPEC -

WEIGHT -

TE Connectivity

NAME RECEPTACLE SHELL ASSEMBLY, VERTICAL, GPRB2 -

SIZE	CAGE CODE	DRAWING NO	RESTRICTED TO
A2	00779	C-1811648	-

CUSTOMER DRAWING

SCALE 1:1 SHEET 2 OF 2 REV G

1471-9 (3/11)

Mouser Electronics

Authorized Distributor

Click to View Pricing, Inventory, Delivery & Lifecycle Information:

TE Connectivity:

1811648-2