THIS DRAWING IS UNPUBLISHED. RELEASED FOR PUBLICATION . . - -
© COPYRIGHT - By - ALL RIGHTS RESERVED.

REVISIONS

P	LTR	DESCRIPTION	DATE	DWN	APVD
	D3	ECO-18-014918	21AUG2019	RR	SH

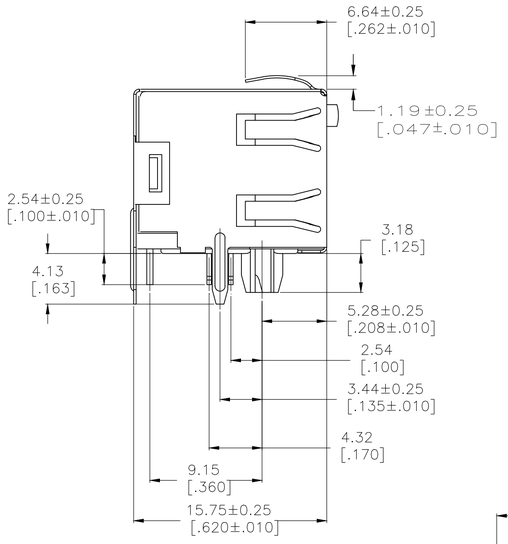

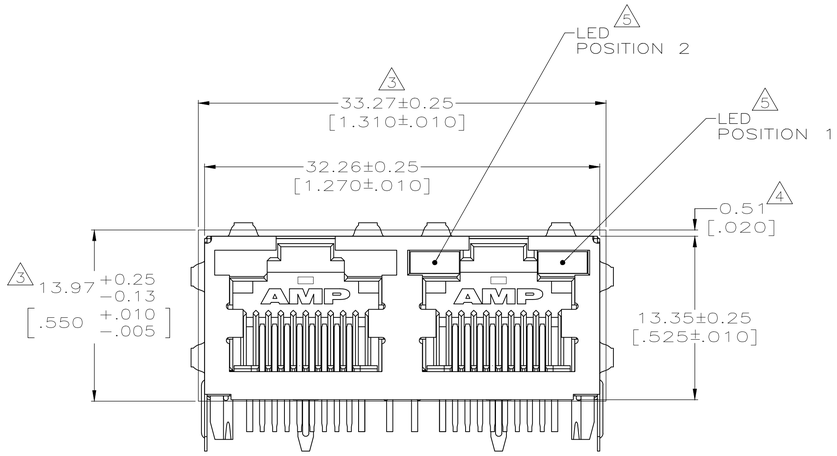

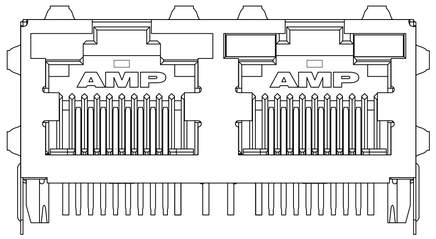

VIEW ONLY FOR 1761791-5 9

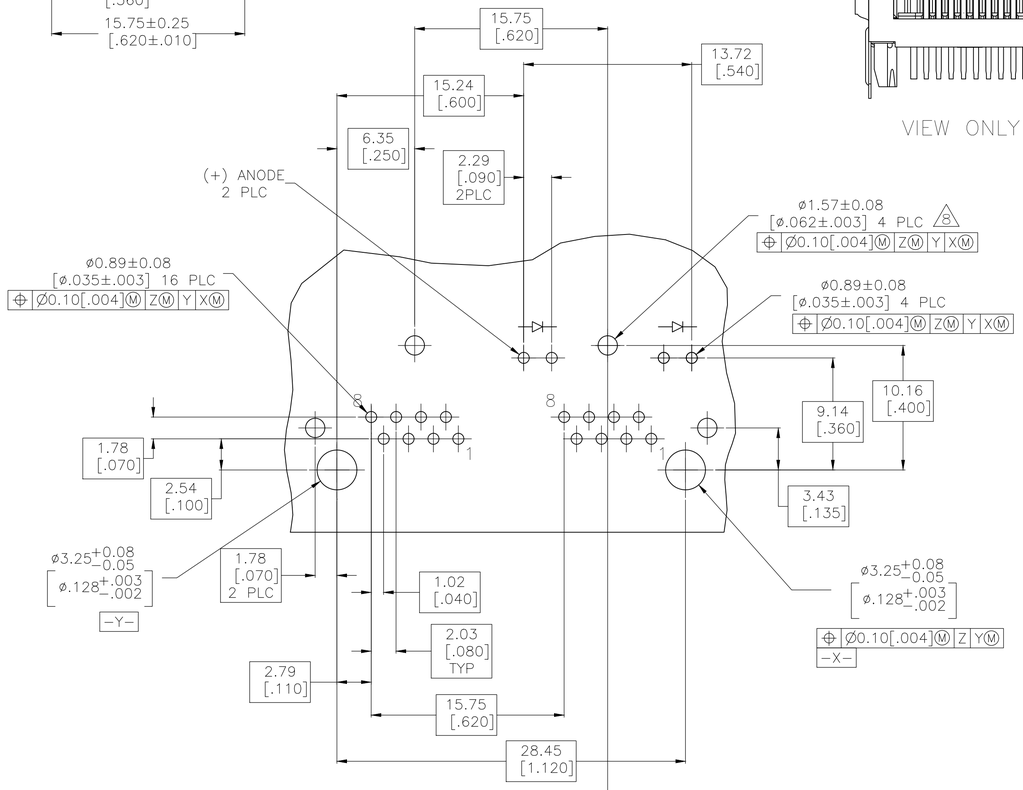

RECOMMENDED PRINTED CIRCUIT BOARD LAYOUT
COMPONENT SIDE

1. MATERIAL:
HOUSING – HIGH TEMPERATURE THERMOPLASTIC, COLOR: BLACK, UL94V-0
TERMINALS – 0.36[.014] THICK PHOS BRONZE PLATED WITH 3.81µm[.000150] MIN THICK BRIGHT TIN LEAD IN SOLDER AREA, 1.27µm[.000050] MIN GOLD IN LOCALIZED PLATE AREA. ENTIRE TERMINAL PLATED WITH 1.27µm[.000050] MIN THICK NICKEL.
SHIELD – 0.196[.0077] THICK COPPER ZINC ALLOY PREPLATED WITH 1.27µm[.000050] MIN SATIN NICKEL WITH 2.03µm[.000080] MIN TIN POST DIPPED ON PCB GROUND TABS
LIGHT EMITTING DIODE (LED) – DIFFUSED EPOXY LENS, 0.51 X 0.51[.020 X .020] CARBON STEEL WIREFRAME LEADS PLATED WITH 8.89µm[.000350] TIN/COPPER OVER 2.03µm[.000080] SILVER OVER 1.02µm[.000040] NICKEL UNDERPLATE OVER 2.03µm[.000080] COPPER UNDERPLATE

2. JACK CAVITY CONFORMS TO FCC RULES AND REGULATIIONS PART 68, SUBPART F.

3. SUGGESTED PANEL OPENING DIMENSIONS.

4. SUGGESTED CLEARANCE BETWEEN TOP OF CONNECTOR AND TOP PANEL OPENING.

5. SEE TABLE FOR COLOR OF LEDS AND NUMBER REQUIRED.

6. THIS MODULAR JACK WITH INTEGRATED LED IS NOT IR REFLOW SOLDERING PROCESS COMPATIBLE.

7. MATERIAL:
HOUSING – HIGH TEMPERATURE THERMOPLASTIC, COLOR: BLACK, UL94V-0
TERMINALS – 0.36[.014] THICK PHOS BRONZE PLATED WITH 3.81µm[.000150] MIN THICK TIN IN SOLDER AREA, 1.27µm[.000050] MIN GOLD IN LOCALIZED PLATE AREA. ENTIRE TERMINAL PLATED WITH 1.27µm[.000050] MIN THICK NICKEL.
SHIELD – 0.196[.0077] THICK COPPER ZINC ALLOY PREPLATED WITH 1.27µm[.000050] MIN SATIN NICKEL WITH 2.03µm[.000080] MIN TIN POST DIPPED ON PCB GROUND TABS
LIGHT EMITTING DIODE (LED) – DIFFUSED EPOXY LENS, 0.51 X 0.51[.020 X .020] CARBON STEEL WIREFRAME LEADS PLATED WITH 8.89µm[.000350] TIN/COPPER OVER 2.03µm[.000080] SILVER OVER 1.02µm[.000040] NICKEL UNDERPLATE OVER 2.03µm[.000080] COPPER UNDERPLATE

8. HOLES ON PCB FOR PCB GROUND TABS ACCORD TO CERTAIN PN.

9. 1761791-5 HAS NO PCB GROUND TABS ON ITS REAR, HOLES ON PCB FOR THESE TABS ARE OPTIONAL.

OBSOLETED	~~GREEN~~	~~GREEN~~	~~7 1761791-5~~
OBSOLETED	~~GREEN~~	~~GREEN~~	~~7 1761791-4~~
OBSOLETED	~~YELLOW~~	~~GREEN~~	~~7 1761791-3~~
OBSOLETED	~~GREEN~~	~~GREEN~~	~~7 1761791-2~~
OBSOLETED	~~YELLOW~~	~~GREEN~~	~~7 1761791-1~~
	POSITION 2	POSITION 1	~~PART NUMBER~~
	INDICATOR COLOR FOR EACH HOUSING		

THIS DRAWING IS A CONTROLLED DOCUMENT.

DIMENSIONS: mm [INCHES]

TOLERANCES UNLESS OTHERWISE SPECIFIED:
0 PLC ± –
1 PLC ± –
2 PLC ± 0.25[.01]
3 PLC ± 0.13[.005]
4 PLC ± –
ANGLES ± –

MATERIAL 1 7
FINISH 1 7

DWN 110CT2007 RG/L.A.MAYER
CHK –
APVD –
PRODUCT SPEC 108-1163-4
APPLICATION SPEC 114-2154
WEIGHT 0.000000

TE Connectivity

NAME INVERTED MOD JACK ASSEMBLY, 1X2, SHIELDED, PANEL GROUND, LED

SIZE	CAGE CODE	DRAWING NO	RESTRICTED TO
A1	00779	C-1761791	–

CUSTOMER DRAWING | SCALE 4:1 | SHEET 1 OF 1 | REV D3

4805 (1/15)

Mouser Electronics

Authorized Distributor

Click to View Pricing, Inventory, Delivery & Lifecycle Information:

TE Connectivity:

1761791-1