THIS DRAWING IS UNPUBLISHED. RELEASED FOR PUBLICATION 20
© COPYRIGHT 20 BY TYCO ELECTRONICS CORPORATION, ALL RIGHTS RESERVED.

LOC	DIST
DF	A5

REVISIONS

P	LTR	DESCRIPTION	DATE	DWN	APVD
	1	PROPOSED	28FEB2005	BW	JPM
	2	REVISED	05AUG2010	BW	JM

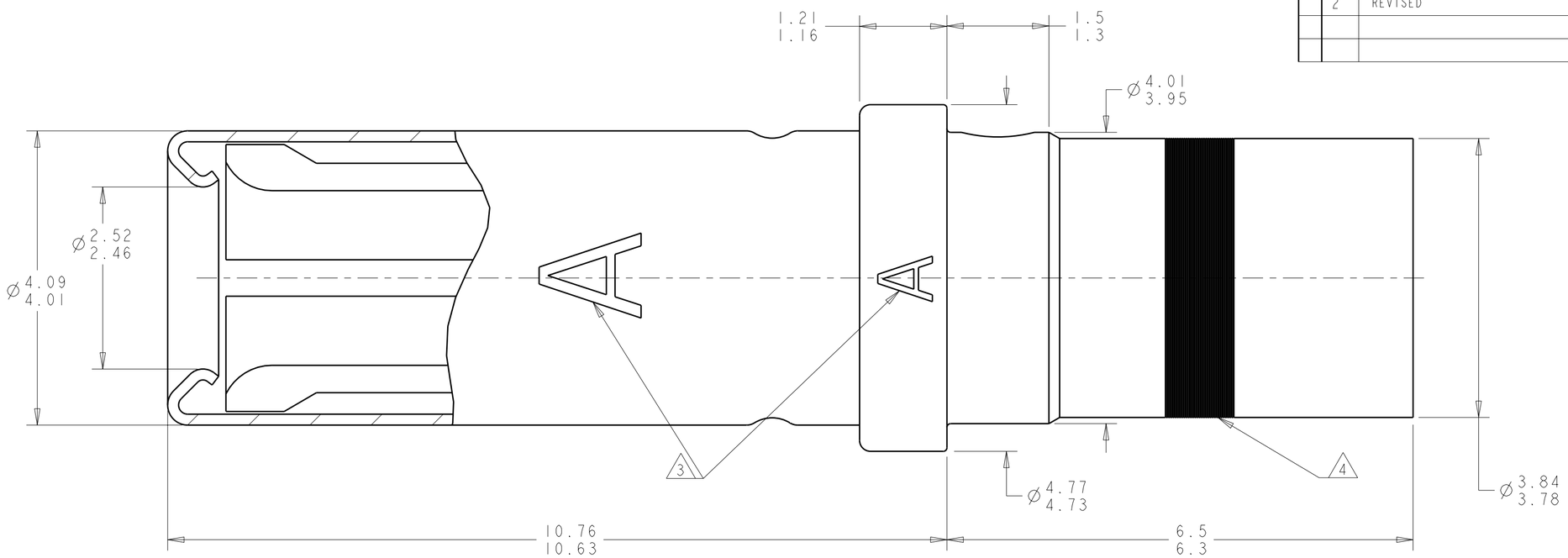

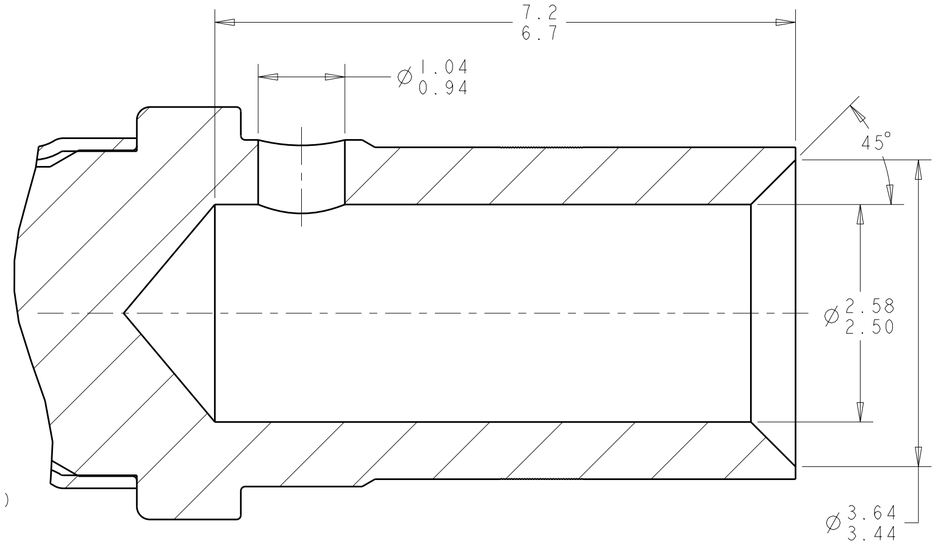

1. CONTACT: COPPER ALLOY PER ASTM B196.
   SLEEVE: STAINLESS STEEL PER AISI 305.

2. CONTACT: 1.27µm MIN GOLD PER ASTM B488 OVER OVER 2.54µm MIN NICKEL PER QQ-N-290 ON ENTIRE STOCK.
   SLEEVE: PASSIVATED.

3. TWO POSSIBLE LOCATIONS FOR THE LETTER "A" MARKING.
   OPTIONAL ALTERNATE MARKING: LETTER "S"

4. YELLOW COLOR BAND.

5. APPLICABLE WIRE SIZE: 12-16 AWG
   WIRE INSULATION DIAMETER: 3.4mm MAX
   INSULATION STRIP LENGTH: 5.75mm-6.25mm

6. APPLICATION TOOLING:
   CRIMPING TOOL: TYCO PART NUMBER 601967-1 (M22520/1-01)
   POSITIONER: TYCO PART NUMBER 601967-2 (M22520/-02)
   SELECTION POSITION: AWG 12 : 8
   AWG 14 : 7
   AWG 16 : 6
   CONTACT INSERTION/EXTRACTION TOOL: 1738327-1 (M81969/28-02) OR 1-1192028-1 (M81969/14-04)

7. THIS PRODUCT IS SOLD BY TYCO ELECTRONICS UNDER A LICENSE FROM RADIALL SA.

THIS PRINT IS
PRELIMINARY
UNQUALIFIED PRODUCT
CONTACT PRODUCT ENGINEERING
BEFORE USING THIS PRINT

1738018-1
PART NUMBER

THIS DRAWING IS A CONTROLLED DOCUMENT FOR TYCO ELECTRONICS CORPORATION. IT IS SUBJECT TO CHANGE AND THE CONTROLLING ENGINEERING ORGANIZATION SHOULD BE CONTACTED FOR THE LATEST REVISION.

DIMENSIONS: mm

TOLERANCES UNLESS OTHERWISE SPECIFIED:
0 PLC ±-
1 PLC ±-
2 PLC ±-
3 PLC ±-
4 PLC ±-
ANGLES ±30'

MATERIAL 1
FINISH 2

DWN	BW	28FEB2005
CHK	JPM	28FEB2005
APVD	JPM	28FEB2005

PRODUCT SPEC -
APPLICATION SPEC -
WEIGHT -

Tyco Electronics
Tyco Electronics
Harrisburg, PA 17105-3608

NAME SOCKET CONTACT ASSEMBLY, SIZE 12, GPR

SIZE	CAGE CODE	DRAWING NO	RESTRICTED TO
A2	00779	C-1738018	-

CUSTOMER DRAWING | SCALE 20:1 | SHEET 1 OF 1 | REV 2

AMP 1471-9 REV 31MAR2000

Pro/ENGINEER DRAWING

Mouser Electronics

Authorized Distributor

Click to View Pricing, Inventory, Delivery & Lifecycle Information:

TE Connectivity:

1738018-1