THIS DRAWING IS UNPUBLISHED. RELEASED FOR PUBLICATION -,- .
© COPYRIGHT 2011 BY TYCO ELECTRONICS CORPORATION. ALL RIGHTS RESERVED.

LOC DW | DIST —

REVISIONS

P	LTR	DESCRIPTION	DATE	DWN	APVD
	02	REVISED (ECR-12-014986) REACTIVE 1-734715-2 & DRAWING REDRAW	27AUG'12	E.L.	W.K.

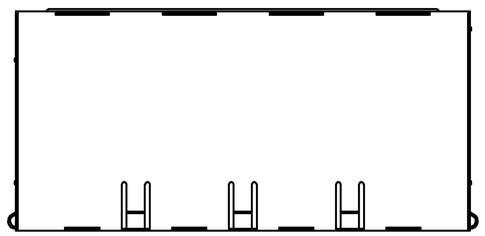

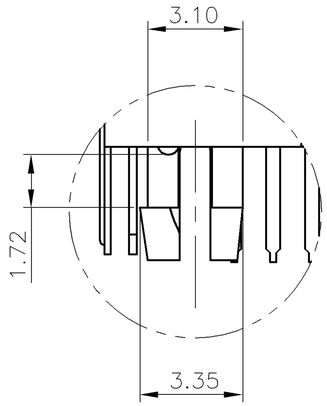

DETAIL Z
SCALE 4:1

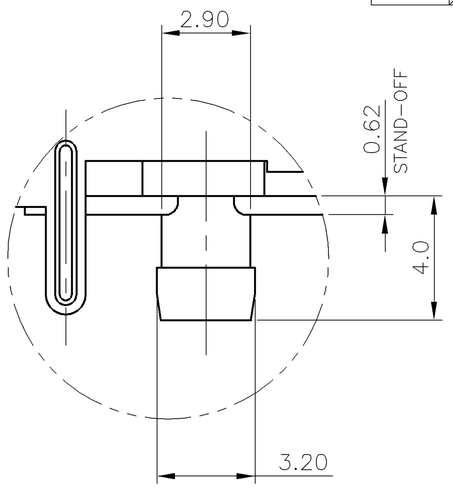

DETAIL Y
SCALE 4:1

NOTE:

1. MATERIAL:
   1.1 HOUSING & COVER: PA46, WITH 30% GF, UL94V-0, COLOR: BLACK.
   1.2 INSERT HOUSING: PBT, WITH 30% GF, UL94V-0, COLOR: BLACK.
   1.3 CONTACTS: PHOSPHOR BRONZE.
   1.4 SHELL & INNER SHELL: BRASS.
2. FINISH:
   2.1 CONTACTS: (SEE TABLE) GOLD PLATED ON CONTACT AREA.
   GOLD FLASH ON SOLDER TAIL.
   1.27um [50u"] MIN. NICKEL UNDERPLATED OVERALL.
   2.2 SHELL: 0.508um [20u"] MIN. NICKEL PLATED OVERALL.
3. REFLOW SOLDER CAPABLE TO 260°C PER TE CONNECTIVITY SPEC 109-201, CONDITION B.

4. OBSOLETE PARTS: OBSOLETE CIS STREAMLINING PER D.RENAUD/D.SINISI

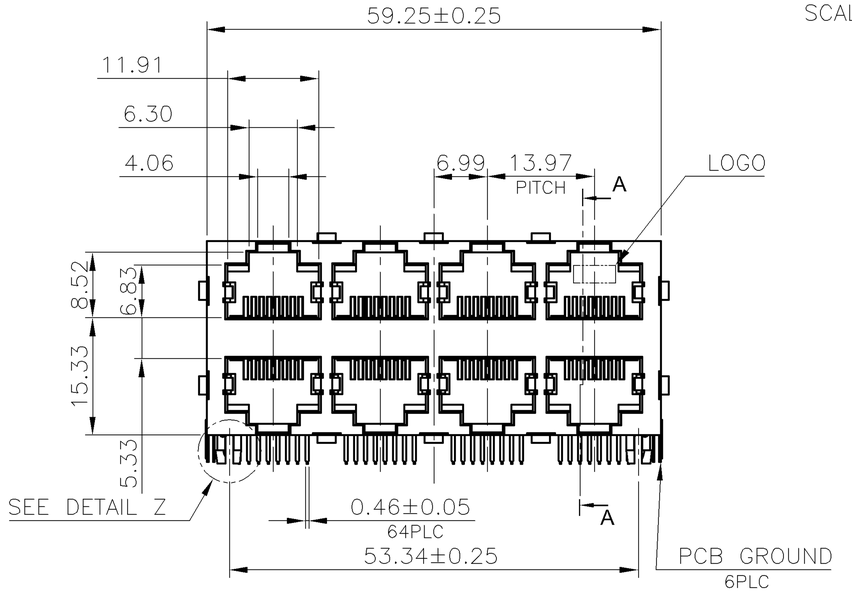

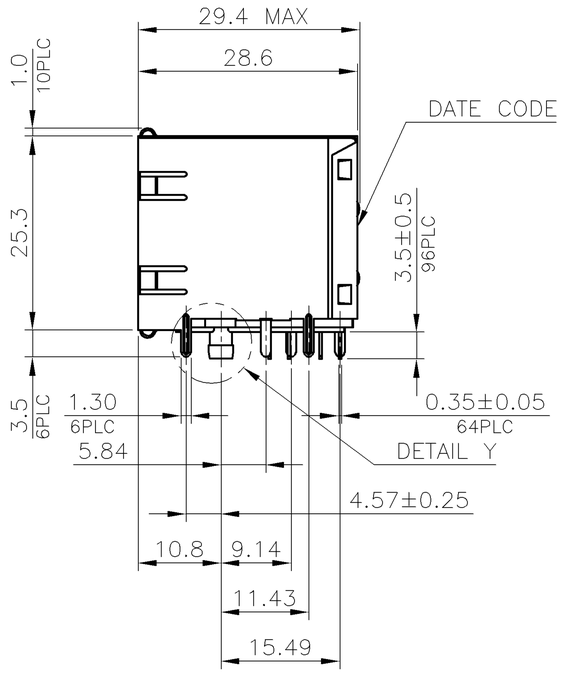

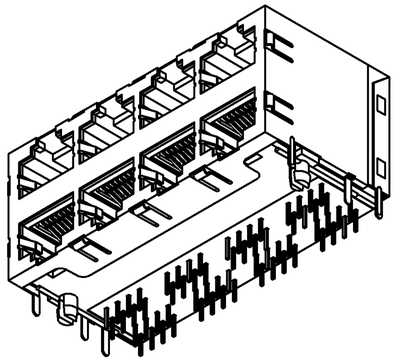

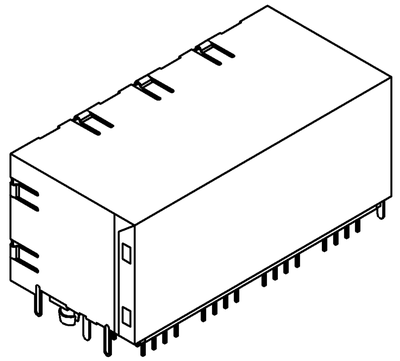

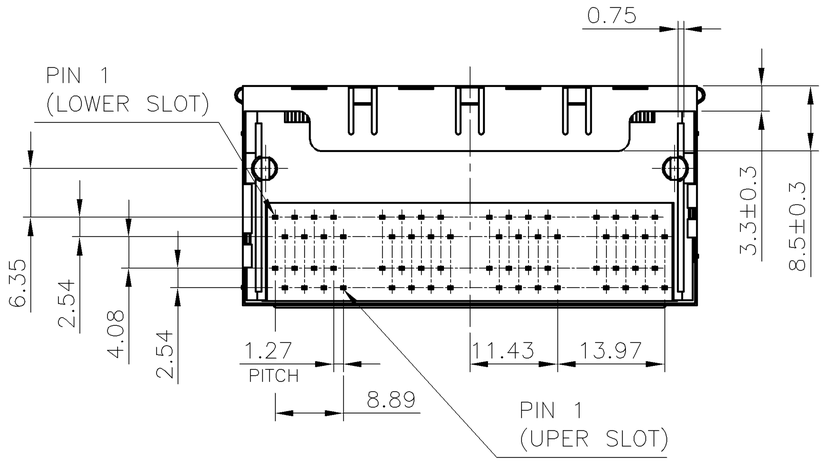

4 OBSOLETE	TRAY	1.27um[50u"]	~~1-1734715-4~~
		0.762um[30u"]	~~1-1734715-3~~
		0.381um[15u"]	1-1734715-2
		0.152um[6u"]	~~1-1734715-1~~
4 OBSOLETE	TUBE	1.27um[50u"]	~~1734715-4~~
		0.762um[30u"]	~~1734715-3~~
		0.381um[15u"]	1734715-2
4 OBSOLETE		0.152um[6u"]	~~1734715-1~~
	PACKAGE	MIN. GOLD THICKNESS	PART NUMBER

THIS DRAWING IS A CONTROLLED DOCUMENT.

DIMENSIONS: mm

TOLERANCES UNLESS OTHERWISE SPECIFIED:

0 PLC	± –
1 PLC	± 0.3
2 PLC	± 0.2
3 PLC	± 0.15
4 PLC	± –
ANGLES	± 3°

MATERIAL: SEE NOTE

FINISH: SEE NOTE

DWN O. HU 04MAY2005
CHK S. HOU 04MAY2005
APVD W.J. KE 04MAY2005
PRODUCT SPEC 108-57136
APPLICATION SPEC —
WEIGHT 47.71 GRAMS
CUSTOMER DRAWING

TE Connectivity

NAME
MODULAR JACK CONNECTOR
MULTI-PORT, RJ45, 2X4
SHIELDED, THRU-HOLE, PANEL GROUND

SIZE	CAGE CODE	DRAWING NO	RESTRICTED TO
A3	00779	C-1734715	—

SCALE — | SHEET 1 OF 4 | REV 02

1470-19 (1/08)

THIS DRAWING IS UNPUBLISHED. RELEASED FOR PUBLICATION -,- .
© COPYRIGHT 2011 BY TYCO ELECTRONICS CORPORATION. ALL RIGHTS RESERVED.

LOC	DIST
DW	—

REVISIONS

P	LTR	DESCRIPTION	DATE	DWN	APVD
		SEE SHEET 1.			

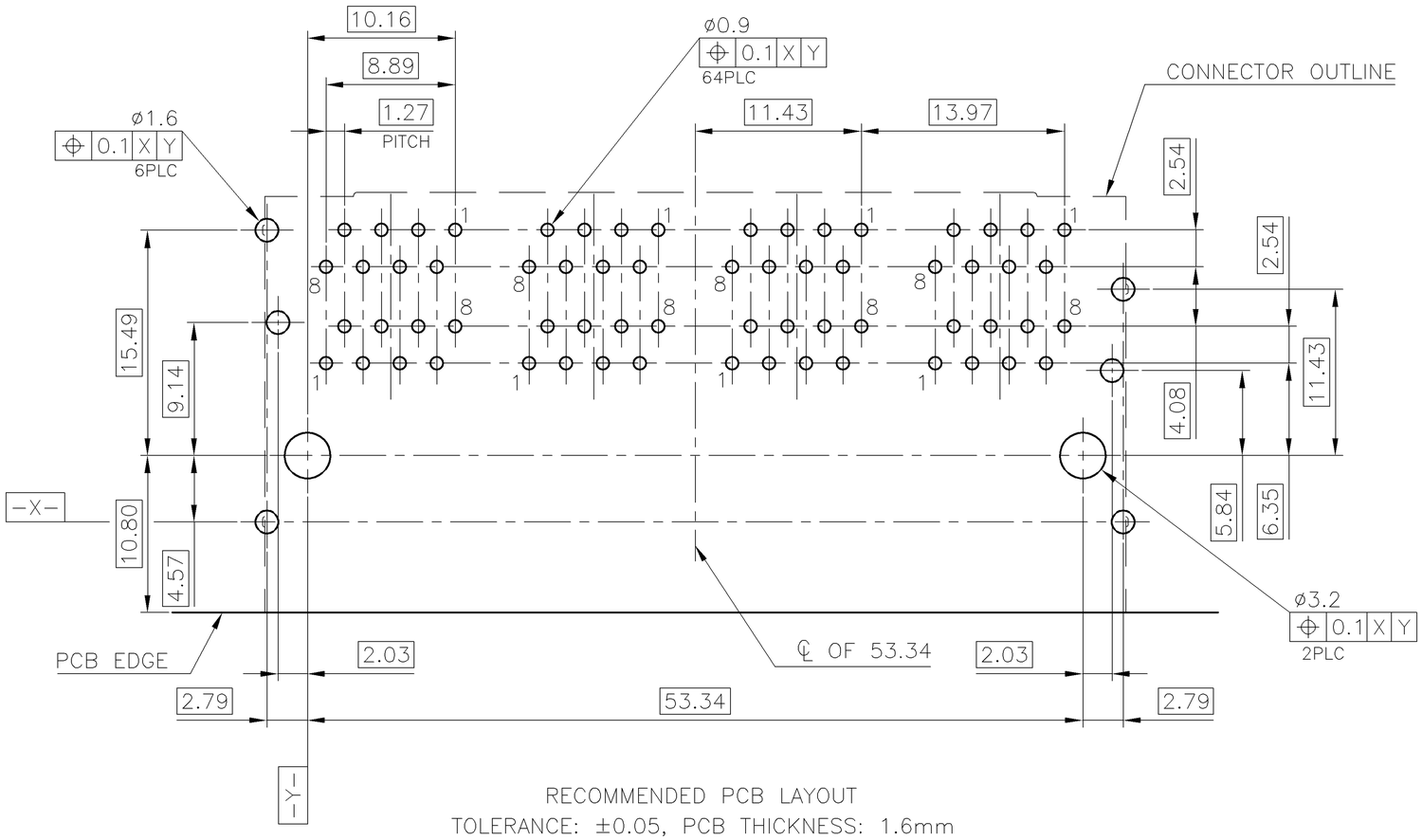

RECOMMENDED PCB LAYOUT
TOLERANCE: ±0.05, PCB THICKNESS: 1.6mm

THIS DRAWING IS A CONTROLLED DOCUMENT.

DIMENSIONS: mm

TOLERANCES UNLESS OTHERWISE SPECIFIED:

0 PLC	± –
1 PLC	± 0.3
2 PLC	± 0.2
3 PLC	± 0.15
4 PLC	± –
ANGLES	± 3°

MATERIAL –

FINISH –

DWN –
CHK –
APVD –
PRODUCT SPEC –
APPLICATION SPEC –
WEIGHT –

TE Connectivity

NAME
MODULAR JACK CONNECTOR
MULTI-PORT, RJ45, 2X4
SHIELDED, THRU-HOLE, PANEL GROUND

SIZE	CAGE CODE	DRAWING NO	RESTRICTED TO
A3	00779	C-1734715	—

CUSTOMER DRAWING | SCALE — | SHEET 2 OF 4 | REV 02

1470-19 (1/08)

THIS DRAWING IS UNPUBLISHED. RELEASED FOR PUBLICATION – , – .
© COPYRIGHT 2011 BY TYCO ELECTRONICS CORPORATION. ALL RIGHTS RESERVED.

LOC	DIST
DW	–

REVISIONS

P	LTR	DESCRIPTION	DATE	DWN	APVD
		SEE SHEET 1.			

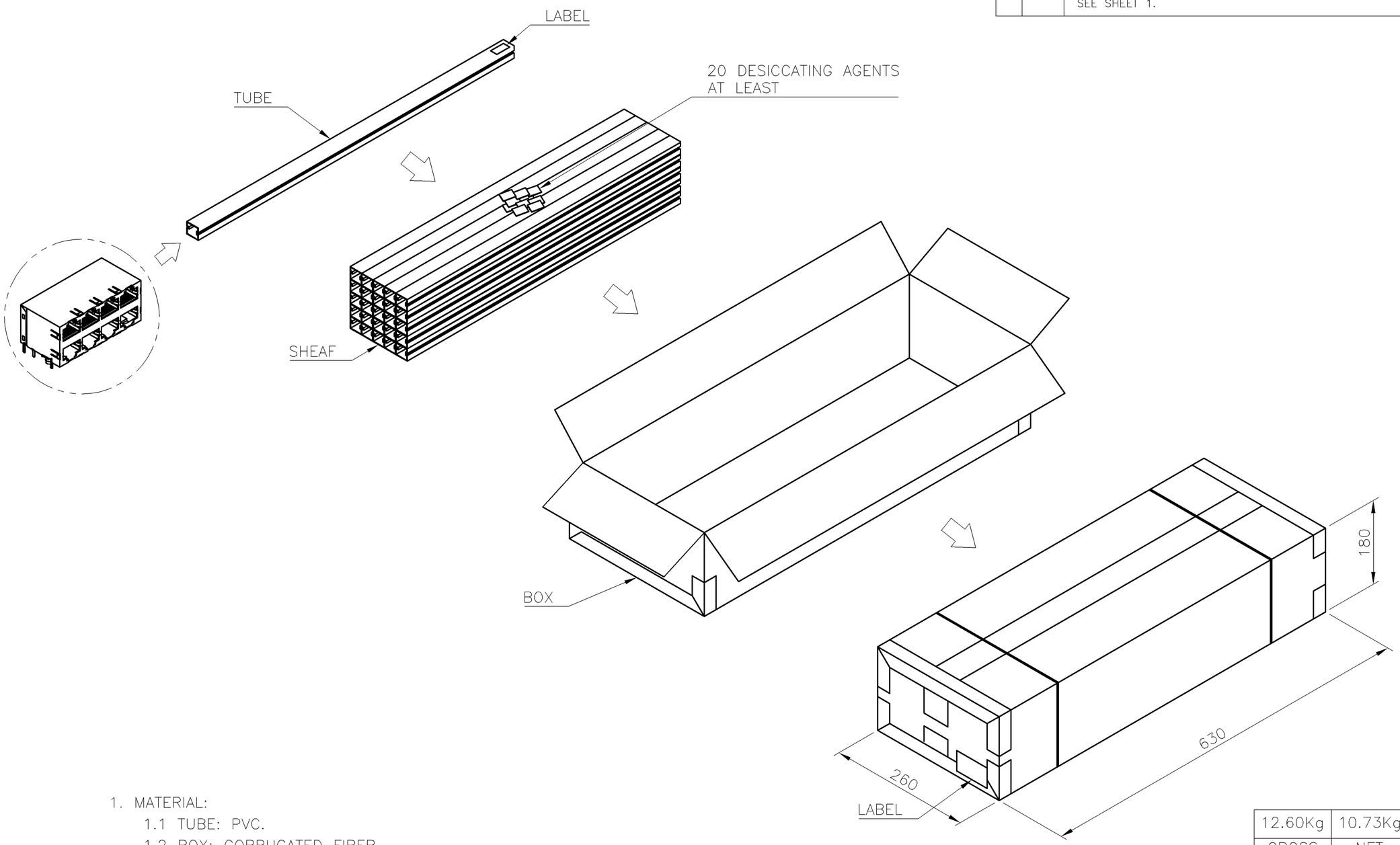

1. MATERIAL:
   1.1 TUBE: PVC.
   1.2 BOX: CORRUGATED FIBER.
2. DIMENSION: SEE DRAWING
3. QUANTITY: SEE TABLE
4. WEIGHT: SEE TABLE
5. EACH BAG SHALL BE INCLUDED:
   * DESICCANT

GROSS WEIGHT	NET WEIGHT	PCS/ TUBE	TUBE/ BOX	PCS/ BOX
12.60Kg	10.73Kg	9	25	225

THIS DRAWING IS A CONTROLLED DOCUMENT.

DIMENSIONS: mm

TOLERANCES UNLESS OTHERWISE SPECIFIED:

0 PLC	± –
1 PLC	± 0.3
2 PLC	± 0.2
3 PLC	± 0.15
4 PLC	± –
ANGLES	± 3°

MATERIAL –

FINISH –

DWN –
CHK –
APVD –
PRODUCT SPEC –
APPLICATION SPEC –
WEIGHT –

TE Connectivity

NAME
MODULAR JACK CONNECTOR
MULTI–PORT, RJ45, 2X4
SHIELDED, THRU–HOLE, PANEL GROUND

SIZE	CAGE CODE	DRAWING NO	RESTRICTED TO
A3	00779	C–1734715	–

CUSTOMER DRAWING | SCALE – | SHEET 3 OF 4 | REV 02

THIS DRAWING IS UNPUBLISHED. RELEASED FOR PUBLICATION – , – .
© COPYRIGHT 2011 BY TYCO ELECTRONICS CORPORATION. ALL RIGHTS RESERVED.

LOC	DIST
DW	—

REVISIONS

P	LTR	DESCRIPTION	DATE	DWN	APVD
		SEE SHEET 1.			

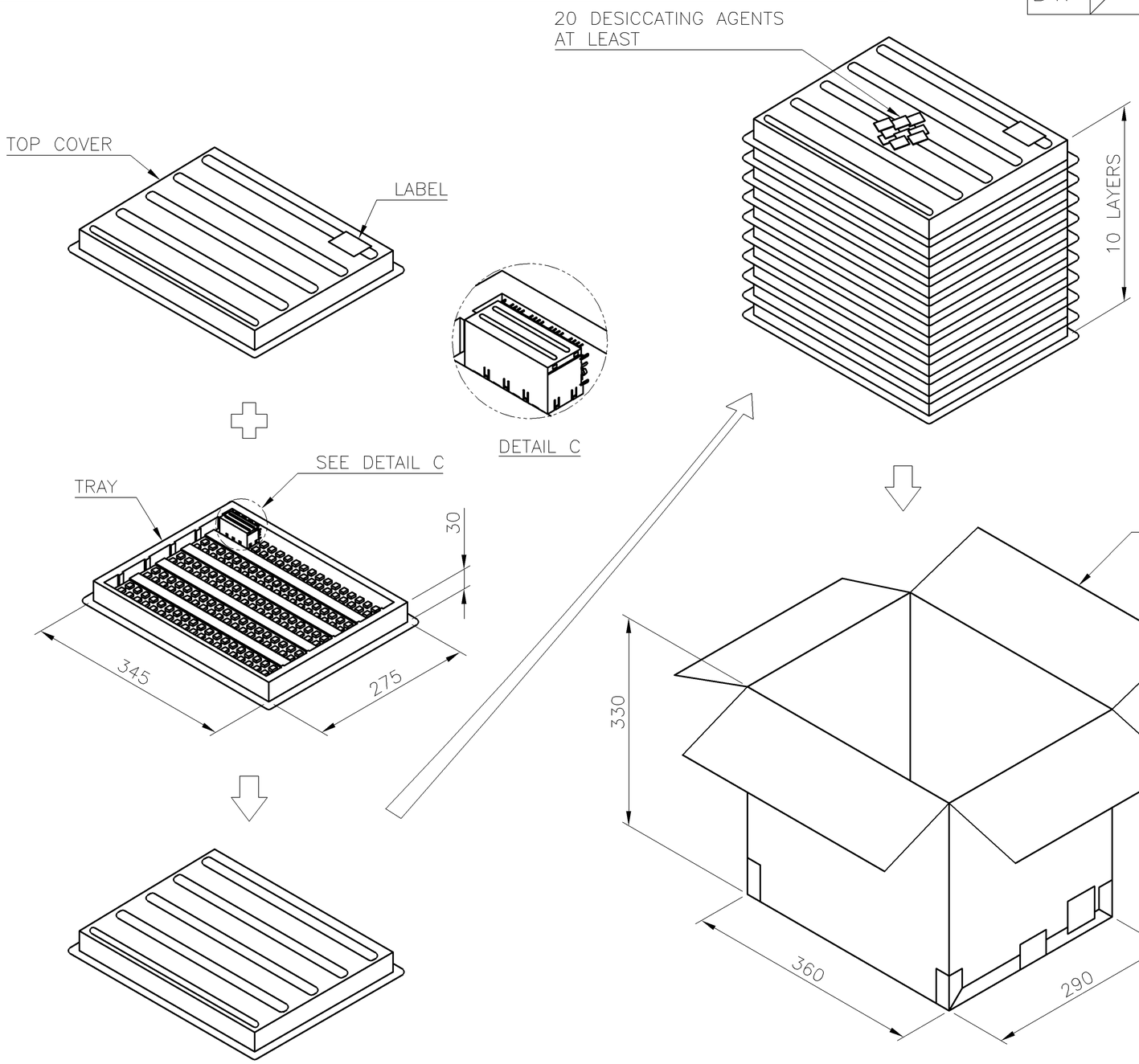

1. MATERIAL:
   1.1 TRAY: PVC.
   1.2 BOX: CORRUGATED FIBER.
2. DIMENSION: SEE DRAWING
3. QUANTITY: SEE TABLE
4. WEIGHT: SEE TABLE
5. EACH BAG SHALL BE INCLUDED:
   * DESICCANT

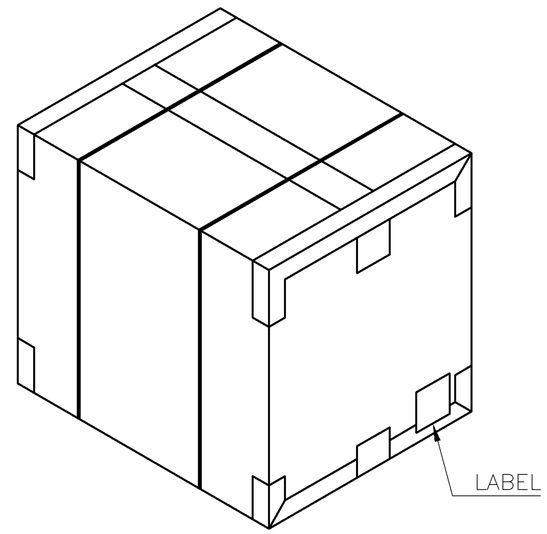

GROSS WEIGHT	NET WEIGHT	PCS/ TRAY	TRAY/ BOX	PCS/ BOX
10.50Kg	9.54Kg	20	10	200

THIS DRAWING IS A CONTROLLED DOCUMENT.

DIMENSIONS: mm

TOLERANCES UNLESS OTHERWISE SPECIFIED:

0 PLC	± –
1 PLC	± 0.3
2 PLC	± 0.2
3 PLC	± 0.15
4 PLC	± –
ANGLES	± 3°

MATERIAL –

FINISH –

DWN –
CHK –
APVD –
PRODUCT SPEC –
APPLICATION SPEC –
WEIGHT –

NAME

MODULAR JACK CONNECTOR
MULTI–PORT, RJ45, 2X4
SHIELDED, THRU–HOLE, PANEL GROUND

SIZE	CAGE CODE	DRAWING NO	RESTRICTED TO
A3	00779	C–1734715	—

CUSTOMER DRAWING | SCALE — | SHEET 4 OF 4 | REV 02

Mouser Electronics

Authorized Distributor

Click to View Pricing, Inventory, Delivery & Lifecycle Information:

TE Connectivity:

1734715-2