B-233P REV. H

REVISIONS			RELEASED	4/15/80
REV.	DESCRIPTION		DATE	APPROVED
G	23455	ITEM 13 WAS-"52516-007",ADD CONNECTOR REF.	93/04/27	WS
H	33420	FIND NOS 14 & 15 ADDED	97/08/04	RS

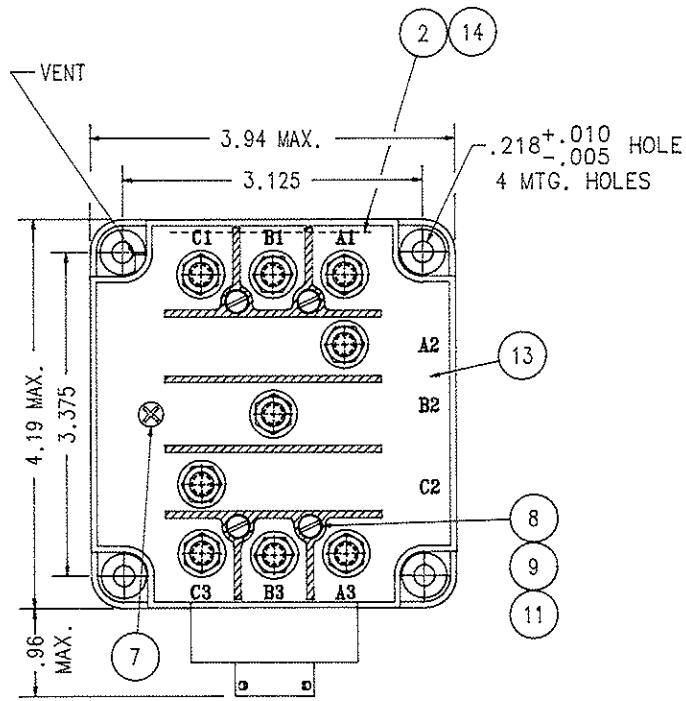

CONSTRUCTION	GASKET SEALED AND VENTED
MAIN CONTACTS	
CONFIGURATION	3 PDT SIDE STABLE
VOLTAGE	115/200 VOLTS FREQ. 400 HZ
CURRENT RES:	120 AMO
IND:	120 AMP
INTERR:	840 AMP
AUXILIARY CONTACTS	
CONFIGURATION	6 PDT
VOLTAGE	28 VDC OR 115V 400 HZ
CURRENT RES:	5 AMP
IND:	3 AMP
LAMP:	2 AMP
COIL DATA	
DUTY CYCLE	CONTINUOUS (ECONOMIZING)
OPER. COIL VOLT.	28 VDC NOMINAL 30 VDC MAX.
PICKUP MINIMUM	18 VDC AT 71° C
DROPOUT VOLTAGE	7 VDC TO 1 VDC
LIFE ELECTRICAL	50,000 CYCLES MIN.
MECHANICAL	100,000 CYCLES MIN.
ENVIRONMENTAL DATA	
OPERATING TEMP.	-55° C TO 71° MAX.
VIBRATION	PER RANGE CURVE OF SPEC. A02ES205
TRANSFER TIME	15 MS MAX. AT 25.8 VDC
SHOCK	25 G'S FOR 6 TO 9 MSEC.
ACCELERATION	10 G'S MAX.
ALTITUDE	50,000 FEET MAX.
MAX. WEIGHT	3 LBS. 3 OZ.

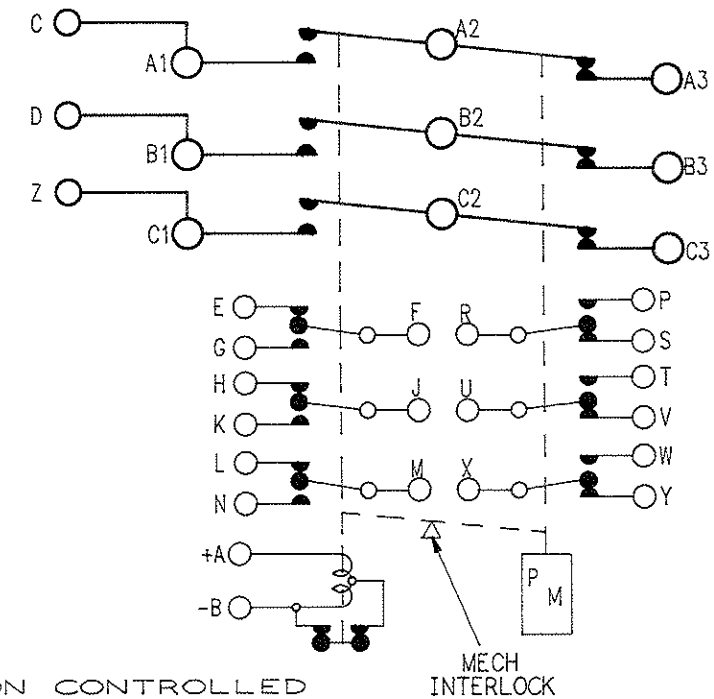

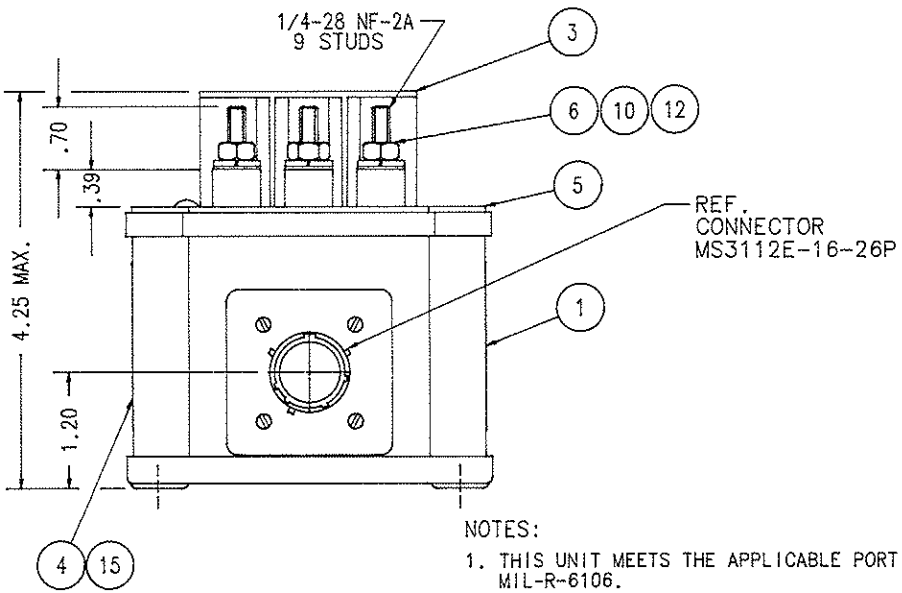

CONFIGURATION CONTROLLED

FIND NO	QTY REQD	PART OR IDENTIFYING NO	NOMENCLATURE OR DESCRIPTION	FSCM NO	DRAWING OR SPECIFICATION	MATERIAL OR NOTE
15	1	39529-023	OVERLAY-WIRING DIAGRAM			
14	1	39529-001	OVERLAY-NAME PLATE			
13	1	36180-040	CONTACTOR ASSEMBLY - PRIMARY			
12	9	51807-034	WASHER - LOCK 1/4 SPLIT		AN935B416	BRASS
11	4	51805-011	WASHER - LOCK NO.5 SPLIT		AN935B51	BRASS
10	9	51703-064	WASHER - FLAT 1/2 X 17/64 X .032		AN960B416	BRASS
9	4	51701-180	WASHER - CAPTIVATING			
8	4	51205-391	SCREW - 5-40 X 1 1/8 RD.HD.		AN515-18	STEEL
7	1	51200-020	SCREW - NO.4 X 1/4 PAN HD.			S.STEEL
6	9	50407-074	NUT - 1/4-28 X 3/8 X 3/16 HEX.		AN345B416	BRASS
5	1	27136-001	PLATE - BASE COVER			
4	1	32214-001	PLATE - WIRING DIAGRAM			
3	1	26427-003	SHIELD - TERMINAL			ZYTEL 51
2	1	16043-001	PLATE - NAME			
1	1	12771-001	PLATE - WARNING			

NOTES:

1. THIS UNIT MEETS THE APPLICABLE PORTIONS OF MIL-R-6106.
2. MECH. INTERLOCK PREVENTS SIMULTANEOUS CLOSING OF BOTH SETS OF CONTACTS.
3. "DANGER HIGH VOLTAGE" TO BE STAMPED ON TERMINAL SHIELD.
3. ALL UNITS AFTER SERIAL NO.CJ-54900 SHALL HAVE THE LETTER "A" AT THE END OF THE SERIAL NO.

UNLESS OTHERWISE SPECIFIED DIMENSIONS ARE IN INCHES TOLERANCES ON

2 PL DEC.	3 PL DEC.	ANGLES
±.03	±.010	± 1°

REF. VERTOL A02ES205-2

DR BY	RLS	97/08/15
CHK BY	RS	97/08/15
ENGR	WS	97/08/21
MFG		97/08/20
RELEASE		
CONTR NO.		
GOVT APPVL		

HARTMAN ELECTRICAL MANUFACTURING
MANSFIELD, OHIO

CONTACTOR 3PDT, SIDE STABLE
120 AMP, 115/200V, 400 HZ

093

SIZE	CODE IDENT	DWG NO.
C	74063	B-233P

SCALE NONE SHEET

Mouser Electronics

Authorized Distributor

Click to View Pricing, Inventory, Delivery & Lifecycle Information:

TE Connectivity:

1616029-3