THIS DRAWING IS UNPUBLISHED. RELEASED FOR PUBLICATION 20
© COPYRIGHT 20 BY TYCO ELECTRONICS CORPORATION. ALL RIGHTS RESERVED.

ATLANTIC VERSION TERMINATOR INTERFACE ADAPTER	PART NUMBER	REVISION	DESCRIPTION	FEED TYPE	
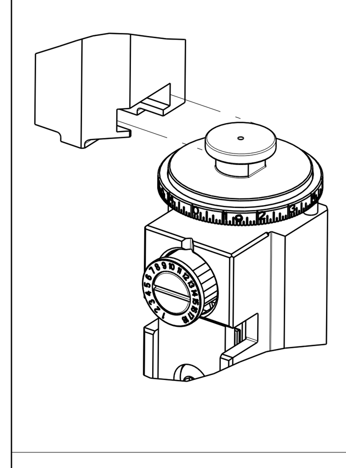	~~2266056-1~~	~~B~~	~~FINE CRIMP HEIGHT ADJUST~~	~~MECHANICAL~~ △15	SUPERSEDED BY 5-2151323-1
	~~2266056-2~~	~~B~~	~~FINE CRIMP HEIGHT ADJUST~~	~~PNEUMATIC~~ △15	SUPERSEDED BY 5-2151323-2
	~~2266056-5~~	~~B~~	~~FINE CRIMP HEIGHT ADJUST~~	△15 ~~SERVO LATCH PLATE~~ △4	OBSOLETE
	~~2266056-6~~	~~B~~	~~NON CRIMP HEIGHT ADJUST~~	△15 △4 ~~SERVO LATCH PLATE~~ △12	OBSOLETE
	~~2266056-7~~	~~B~~	~~FINE CRIMP HEIGHT ADJUST~~	~~NONE~~	OBSOLETE
	7-2266056-7	A	CRIMP TOOLING KIT	-	

SET UP GAUGE	LOC	DIST
2119599-1	A	66

REVISIONS

P	LTR	DESCRIPTION	DATE	DWN	APVD
	1	DEVELOPMENT	24SEP2013	KH	UG
	A	RELEASED	18OCT2013	BH	GB
	B	ECR-17-003780	15MAR2017	TB	CT
	B1	ECR-20-013853	28SEP2020	TB	RK

APPLICATOR DATA		
CRIMP	SIZE	TYPE
WIRE	2.03 mm [.080]	F
INSUL	6.35 mm [.250]	O
APPLICATOR INSTRUCTIONS 408-10389		

TERMINAL DATA: TE TERMINAL		TE CRIMP SPECIFICATION	
TERMINAL NAME: DIA .4MM SOCKET CONTACT			
WIRE STRIP LENGTH 4.55-5.31 mm [.179-.209 IN]		INSULATION DIAMETER RANGE Ø 6.00 mm MAX [.236 IN MAX]	
TERMINAL APPLICATION SPECIFICATION	114-18118	-	-
	-	-	-
TERMINALS APPLIED △13			
TE TERMINAL	TE TERMINAL	TE SEAL	TE SEAL
962952-1	962952-2	963243-1	

WIRE SIZE	CRIMP HEIGHT mm [INCH]	CRIMP HEIGHT △9 REFERENCE SETTING
1.00mm2	1.43+/-0.05 [.056+/-.002]	4.3
0.75mm2	1.34+/-0.05 [.053+/-.002]	5.0
0.50mm2	1.26+/-0.05 [.050+/-.002]	5.8

△1 RECOMMENDED SPARE PARTS

△2 GREASE BEARING SURFACES LIGHTLY

3. LUBRICATE DAILY PER THE APPLICATOR INSTRUCTION SHEET SUPPLIED WITH THE APPLICATOR.

△4 APPLICATOR SPECIFIC DATA TO BE ENTERED INTO BLANK MEMORY CHIP AT ASSEMBLY. SEE BELOW FOR PART NUMBER:
MECHANICAL FEED WITH "SMART APPLICATOR" CONVERSION: 8-2266056-4
PNEUMATIC FEED WITH "SMART APPLICATOR" CONVERSION: 8-2266056-4
SERVO FEED WITH "FINE CRIMP HEIGHT ADJUST": 8-2266056-5
SERVO FEED WITH "NON-CRIMP HEIGHT ADJUST": 8-2266056-6

5. ADJUSTMENT OF THE STRIPPER MAY BE REQUIRED WHEN MOVING THE APPLICATOR BETWEEN BENCH AND LEADMAKER APPLICATIONS.

△6 APPLY PART NUMBER 1-23419-5 LOCTITE TO THREADS OF ITEMS 62 & 180. APPLY PART NUMBER 2-23419-6 LOCTITE TO THREADS OF ITEM 242. FOR -6 ONLY APPLY PART NUMBER 1-23419-5 LOCTITE TO THREADS OF ITEM 37.

△7 GREASE THREADS, GROOVE AND O-RING ON ITEMS 35 & 252.

△8 MAGNET, ITEM 166 MUST BE ORIENTED CORRECTLY IN ORDER TO PROPERLY ACTUATE THE COUNTER.

△9 CRIMP HEIGHT REFERENCE SETTING WAS THE SETTING USED WHEN THE APPLICATOR WAS QUALIFIED AT THE FACTORY. ADJUSTMENT MAY BE NECESSARY WHEN RUNNING APPLICATOR IN THE FIELD.

△10 SPARE FEED CAM STORAGE LOCATION REFER TO INSTRUCTION SHEET FOR ADDITIONAL INFORMATION.

△11 TO CONVERT THE APPLICATOR TO A NON-CARRIER CUTTING STYLE, REMOVE ITEM 13 AND ATTACH TO THE LOCATION ON THE BACK SIDE OF THE HOUSING. REFER TO INSTRUCTION SHEET FOR ADDITIONAL INFORMATION.

△12 WHEN ASSEMBLING -6 NON-CRIMP HEIGHT ADJUST APPLICATOR USE SHIM PACK 2119957-2 TO ALIGN APPLICATOR'S MAXIMUM WIRE CRIMP HEIGHT AT NORMAL TERMINATOR SHUT HEIGHT

△13 THIS APPLICATOR APPLIES TERMINAL WITH A SEAL. INSULATION RANGE QUOTED IS THAT OF THE TERMINAL. THE SEAL INSULATION RANGE IS Ø1.40-2.00mm.

△14 APPLY TORQ-SEAL IN ALLEN SOCKET TO FILL HOLE AFTER FLAT HD HAS BEEN ADJUSTED TO CORRECT HEIGHT AT QUALIFICATION. APPLY #1-23419-5 LOC-TITE TO THREADS.

△15 MUST BE FED OFF OF SLOT ON CARRIOR STRIP

△16 THIS APPLICATOR IS SPECIFIC FOR USE IN A STRIPPER SEAL TERMINATING UNIT.

*WARNING
ON INSTALLATION, SET WIRE DISC, ITEM 40 TO LARGEST WIRE SIZE SETTING. USE OF SETTINGS BELOW MINIMUM REQUIRED CRIMP HEIGHT SETTING WILL CAUSE DAMAGE TO CRIMP TOOLING.

	-77	-7	-6	-5	-2	-1	PART NO	DESCRIPTION	ITEM NO
△12	-	-	1	-	-	-	2119957-2	APPLICATOR SHIM PACK	260

	-77	-7	-6	-5	-2	-1	PART NO	DESCRIPTION	ITEM NO
△7	-	1	-	1	1	1	8-21084-0	O-RING, .676 ID, .070 DIA. MAT.	252
	-	-	-	-	1	-	2119640-1	PUSH ROD, AIR FEED	250
	-	-	-	-	1	-	1803259-1	BUSHING, FLANGED	249
	-	-	-	-	1	-	2119641-1	FEED CAM, AIR FEED	248
	-	1	-	1	1	1	2119798-1	DETENT PIN	247
	-	1	-	1	1	1	1-22279-3	SPRING, COMPRESSION	246
	-	-	1	-	-	-	2119758-1	RAM, AMP STYLE, SIDE FEED, NON-ADJ.	245
	-	1	1	1	1	1	2119082-1	CAM, SNAIL, INSULATION ADJUSTMENT	244
	-	1	1	1	1	1	2079764-1	WASHER, WAVE SPRING, CREST-TO-CREST	243
△6	-	1	1	1	1	1	2119083-1	RETAINER, INSULATION DIAL	242
	-	1	1	1	1	1	7-18023-7	SCR, SKT HD CAP M3 X 4.0	241
	-	-	2	2	-	-	2168400-6	SHCS, LOW HEAD, RoHS, M5 X 16	240
	-	-	-	-	-	1	2119580-1	MECHANICAL FEED ASSEMBLY	239
	-	-	-	-	1	-	2063440-1	AIR FEED MODULE	238
	-	-	1	1	-	-	2119740-2	TAG,IDENTIFICATION	213
	-	-	1	1	-	-	1901094-3	SPACER, FEEDER	198
	-	1	1	1	1	1	4-1722335-3	STRIPPER, SIDE FEED	182
	-	1	1	1	1	1	1-5018030-0	NUT, HEX, REG, RoHS, M3.5	181
△6	-	1	1	1	1	1	1-1752354-9	STANDOFF,HOLD-DOWN	180
	-	1	1	1	1	1	993111-1	PIN, SLOTTED SPRING 3.0 X 20.0	177
	-	1	1	1	1	1	5-22280-0	SPRING, COMPRESSION	176
	-	1	1	1	1	1	1752353-3	GUIDE PIN,HOLDDOWN	175
	-	1	1	1	1	1	1901680-2	GUIDE PIN,HOLDDOWN	174
	-	-	-	-	2	-	21045-3	RING, RETAIN, EXTERN, 3/16 CRESCENT	172
	-	1	1	1	1	1	994969-1	MAGNET, RARE EARTH HIGH ENERGY	166
	-	REF	REF	REF	REF	REF	994970-2	COUNTER, MAGNETIC	164
	-	-	-	-	1	-	240638-1	SPRING, FEED FINGER	163
	-	-	-	-	1	-	3-23627-7	PIN, RETAIN, GRVD, 3/16 X .854	137
	-	-	-	-	1	-	2119799-1	HOLDER,FEED FINGER, AF	136
	-	-	REF	REF	-	-	SEE NOTE 4	MEMORY CHIP, PROGRAMMED	135
	-	-	1	1	-	-	1633743-1	SERVO FEED LATCH ASM	133
	-	1	1	1	1	1	1-18028-2	WASHER, FLAT, REG M4	119
	-	-	REF	REF	-	-	2119944-1	FEED FINGER ASSEMBLY,SF	117
	-	1	1	1	1	1	455888-6	SPACER, CRIMPER	82
	-	1	1	1	1	1	2119956-1	DOCUMENTATION PACKAGE	71
	-	1	1	1	1	1	1-2119791-0	DEPRESSOR, WIRE	70
	-	1	-	-	1	1	2119740-1	TAG,IDENTIFICATION	67
	-	2	2	2	2	2	2168078-1	SCREW, DRIVE, RH, RoHS, 2 x .188	66
	-	1	-	1	1	1	2119793-1	LIMITER, ADJUSTMENT BOLT	63
△6	-	3	-	3	3	3	992763-5	SCR, SET, SOC, CONE PNT, M3 x 4.0	62
	-	1	1	1	1	1	2079383-4	SCR, BHSC, RoHS (M4 X 8)	60
	-	-	-	-	1	1	5-18022-5	SCR, HEX HD CAP, M4 X 6.0	59
	-	1	1	1	1	1	985575-3	SCR, FLT SKT HD CAP M3 X 10.0	57
	-	-	-	-	1	1	1338685-1	PAWL, FEED	56
	-	4	4	4	4	4	2168400-1	SHCS, LOW HEAD, RoHS, M4 X 12	54
	-	-	-	-	1	2	18023-9	SCR, SKT HD CAP M4 X 6.0	49
	-	-	-	-	-	1	2119652-1	FEED CAM, PRE FEED	48
	-	-	-	-	-	1	2119653-1	FEED CAM, POST FEED	47
	-	1	1	1	1	1	2-2119656-1	APPLICATOR BASIC ASSEMBLY, SF	46
	-	1	-	1	1	1	2119370-1	RAM, AMP STYLE, SIDE FEED	44
	-	1	1	1	1	1	2079383-7	SCR, BHSC, RoHS (M8 X 25)	41
	-	1	-	1	1	1	2119645-1	DISC, NUMBERED FA WIRE ADJUSTMENT	40
	-	1	-	1	1	1	2119957-1	APPLICATOR SHIM PACK	39
	-	1	1	1	1	1	2119644-1	RAM WASHER, PRECISION	38
△6	-	1	1	1	1	1	2119085-1	FA HEAD, ATLANTIC STYLE	37
△7	-	1	-	1	1	1	2119092-1	BOLT, ADJUSTMENT	35
	-	1	1	1	1	1	1-1752356-7	SUPPORT, TERMINAL	34
	-	2	2	2	2	2	2079383-5	SCR, BHSC, RoHS (M4 X 20)	33
	-	1	1	1	1	1	2161328-1	HEX HEAD, FLANGED, M5 x 8mm LONG	32
	-	1	1	1	1	1	1320908-7	SPACER, STRIP GUIDE	30
	-	1	1	1	1	1	2119959-2	ASSEMBLY, STRIP GUIDE	29
	-	1	1	1	1	1	455888-3	SPACER, CRIMPER	28
	-	1	1	1	1	1	1320928-2	STRIP GUIDE	24
△11 △1	-	1	1	1	1	1	2119806-1	INSERT, SHEAR	13
	-	1	1	1	1	1	3-22280-3	SPRING, COMPRESSION	12
	-	1	1	1	1	1	1-356885-4	STOP, SHEAR	11
△1	-	1	1	1	1	1	2119805-1	SHEAR HOLDER, FRONT	10
△1	-	1	1	1	1	1	318707-1	FLOATING SHEAR, FRONT	9
△1	1	1	1	1	1	1	9-1333204-4	ANVIL, COMBINATION	8
	-	1	1	1	1	1	2119781-5	DEPRESSOR, SHEAR	5
	-	1	1	1	1	1	238011-1	BLOCK, CRIMPER SPACER	4
△1	1	1	1	1	1	1	2-1803019-2	CRIMPER, INSULATION O	3
△1	1	1	1	1	1	1	2-456405-8	CRIMPER, WIRE PREMIUM	1

ATLANTIC VERSION
Shown on sheets 1 of 4 & 2 of 4
(Pacific version shown on sheets 3 of 4 & 4 of 4)

THIS DRAWING IS A CONTROLLED DOCUMENT FOR TYCO ELECTRONICS CORPORATION. IT IS SUBJECT TO CHANGE AND THE CONTROLLING ENGINEERING ORGANIZATION SHOULD BE CONTACTED FOR THE LATEST REVISION.

DIMENSIONS: mm

TOLERANCES UNLESS OTHERWISE SPECIFIED:
0 PLC ±
1 PLC ±
2 PLC ±
3 PLC ±
4 PLC ±
ANGLES ±-

MATERIAL - -
FINISH - -

DWN K.HUANG 24SEP2013
CHK L.ZHANG 24SEP2013
APVD U.GUO 24SEP2013
PRODUCT SPEC -
APPLICATION SPEC -
WEIGHT -

TE Connectivity
Harrisburg, PA 17105-3608

NAME
Ocean Side Feed
Applicator
-

SIZE A1 | CAGE CODE 00779 | DRAWING NO C-2266056 | RESTRICTED TO -

Customer Accessible Production Drawing | SCALE 1:2 | SHEET 1 OF 4 | REV B1

SHEETS 3 & 4 ARE NOT REQUIRED FOR ATLANTIC VERSION

THIS DRAWING IS UNPUBLISHED. RELEASED FOR PUBLICATION 20
© COPYRIGHT 20 BY TYCO ELECTRONICS CORPORATION. ALL RIGHTS RESERVED.

LOC	DIST
A	66

REVISIONS

P	LTR	DESCRIPTION	DATE	DWN	APVD
	-	SEE SHEET 1	-	-	-

FEED TYPE MECHANICAL

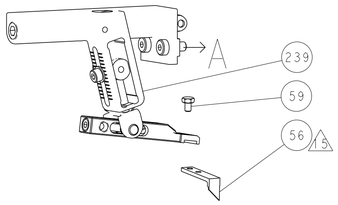

PNEUMATIC

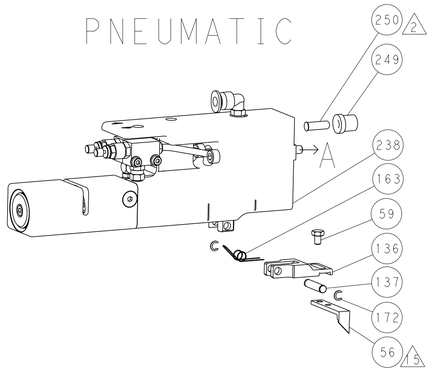

SERVO LATCH PLATE

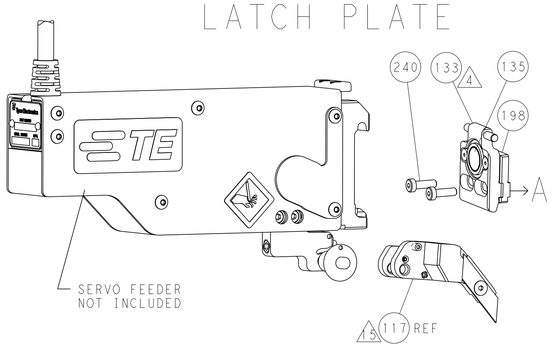

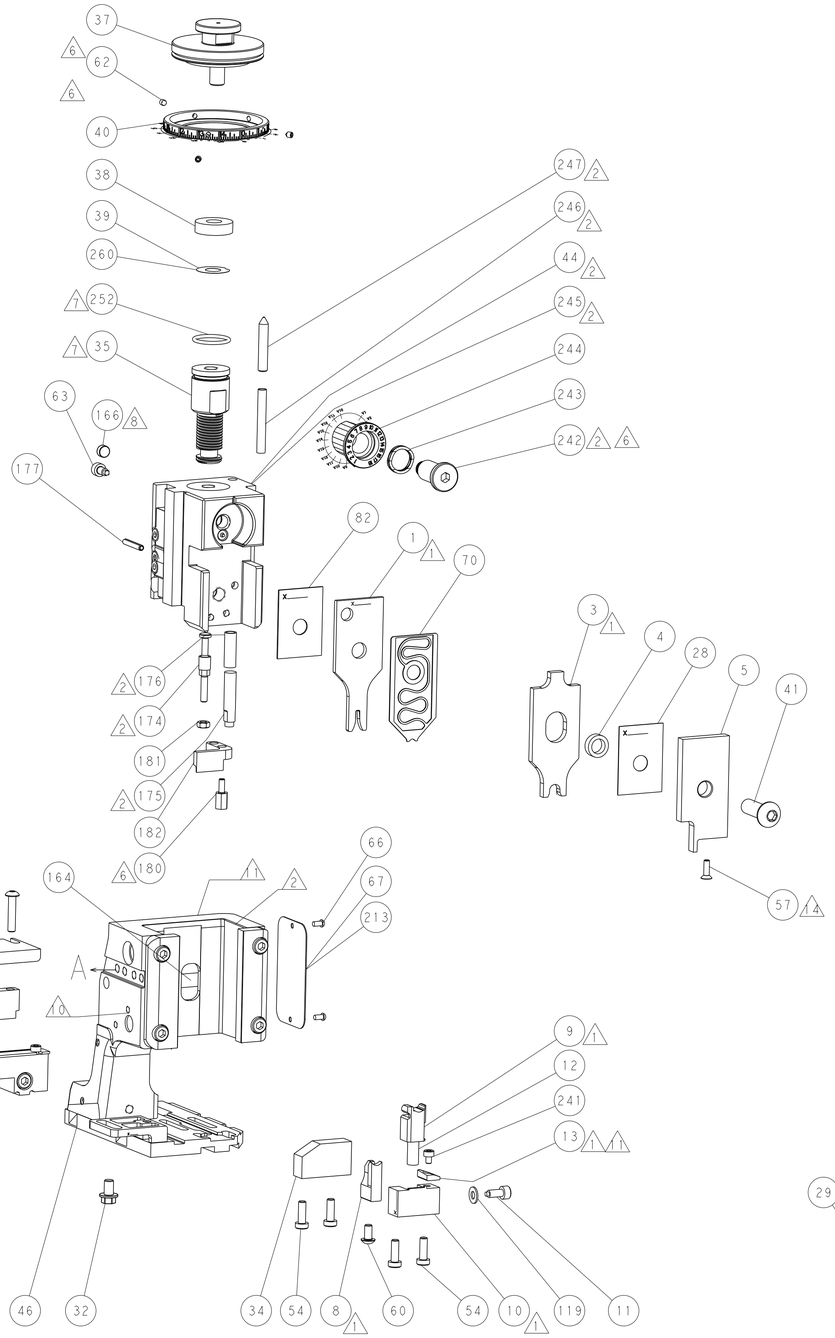

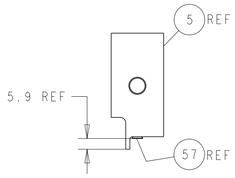

SHEAR DEPRESSOR DETAIL

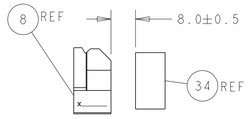

TERMINAL SUPPORT LOCATION

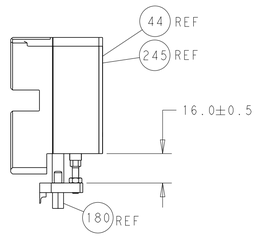

HOLDDOWN SET-UP

ITEM 30 LOCATED AT
FRONT HOLES

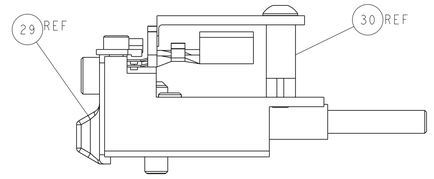

FEED TRACK POSITION
GUIDE BY INSULATION BARREL

CAM POSITIONS

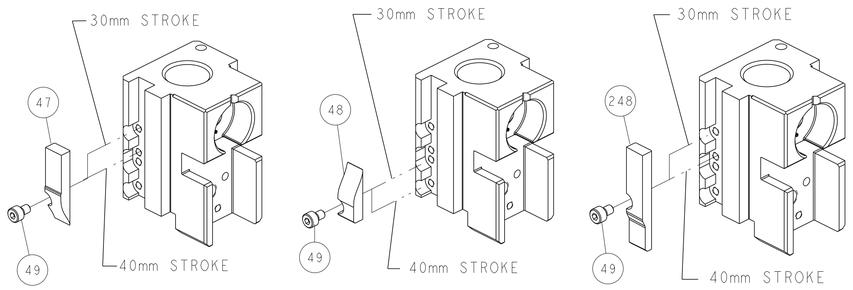

ATLANTIC VERSION
Shown on sheets 1 of 4 & 2 of 4
(Pacific version shown on sheets 3 of 4 & 4 of 4)

THIS DRAWING IS A CONTROLLED DOCUMENT FOR TYCO ELECTRONICS CORPORATION. IT IS SUBJECT TO CHANGE AND THE CONTROLLING ENGINEERING ORGANIZATION SHOULD BE CONTACTED FOR THE LATEST REVISION.

DIMENSIONS: mm

TOLERANCES UNLESS OTHERWISE SPECIFIED:
0 PLC ±
1 PLC ±
2 PLC ±
3 PLC ±
4 PLC ±
ANGLES ±

MATERIAL - -
FINISH - -

DWN	K.HUANG	24SEP2013
CHK	L.ZHANG	24SEP2013
APVD	U.GUO	24SEP2013
PRODUCT SPEC	-	
APPLICATION SPEC	-	
WEIGHT	-	

TE Connectivity
Harrisburg, PA 17105-3608

NAME: Ocean Side Feed Applicator -

SIZE	CAGE CODE	DRAWING NO	RESTRICTED TO
A1	00779	C-2266056	-

Customer Accessible Production Drawing | SCALE 1:2 | SHEET 2 OF 4 | REV B1

AMP 4805 REV 31MAR2000

SHEETS 3 & 4 ARE NOT REQUIRED FOR ATLANTIC VERSION

THIS DRAWING IS UNPUBLISHED. RELEASED FOR PUBLICATION 20
© COPYRIGHT 20 BY TYCO ELECTRONICS CORPORATION. ALL RIGHTS RESERVED.

PACIFIC VERSION TERMINATOR INTERFACE ADAPTER	PART NUMBER	REVISION	DESCRIPTION	FEED TYPE	
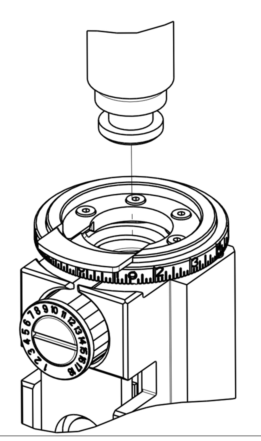	~~2-2266056-1~~	~~B~~	~~FINE CRIMP HEIGHT ADJUST~~	~~MECHANICAL~~ (14)	OBSOLETE
	~~2-2266056-2~~	~~B~~	~~FINE CRIMP HEIGHT ADJUST~~	~~PNEUMATIC~~ (14)	OBSOLETE
	~~2-2266056-5~~	~~B~~	~~FINE CRIMP HEIGHT ADJUST~~	(14) SERVO LATCH PLATE (4)	OBSOLETE
	~~2-2266056-7~~	~~B~~	~~FINE CRIMP HEIGHT ADJUST~~	~~NONE~~	OBSOLETE
	7-2266056-7	A	CRIMP TOOLING KIT	-	

APPLICATOR DATA		
CRIMP	SIZE	TYPE
WIRE	2.03 mm [.080]	F
INSUL	6.35 mm [.250]	O
APPLICATOR INSTRUCTIONS 408-10389		

TERMINAL DATA: TE TERMINAL		TE CRIMP SPECIFICATION	
TERMINAL NAME: DIA .4MM SOCKET CONTACT			
WIRE STRIP LENGTH 4.55-5.31 mm [.179-.209 IN]		INSULATION DIAMETER RANGE Ø 6.00 mm MAX [.236 IN MAX]	
TERMINAL APPLICATION SPECIFICATION	114-18118 / -	- / -	- / -
TERMINALS APPLIED (12)			
TE TERMINAL	TE TERMINAL	TE SEAL	TE SEAL
962952-1	962952-2	963243-1	

WIRE SIZE	CRIMP HEIGHT mm [INCH]	CRIMP HEIGHT REFERENCE SETTING (9)
1.00mm2	1.43+/-0.05 [.056+/-.002]	4.3
0.75mm2	1.34+/-0.05 [.053+/-.002]	5.0
0.50mm2	1.26+/-0.05 [.050+/-.002]	5.8

(1) RECOMMENDED SPARE PARTS

(2) GREASE BEARING SURFACES LIGHTLY

3. LUBRICATE DAILY PER THE APPLICATOR INSTRUCTION SHEET SUPPLIED WITH THE APPLICATOR.

(4) APPLICATOR SPECIFIC DATA TO BE ENTERED INTO BLANK MEMORY CHIP AT ASSEMBLY. SEE BELOW FOR PART NUMBER:
MECHANICAL FEED WITH "SMART APPLICATOR" CONVERSION: 8-2266056-4
PNEUMATIC FEED WITH "SMART APPLICATOR" CONVERSION: 8-2266056-4
SERVO FEED WITH "FINE CRIMP HEIGHT ADJUST": 8-2266056-5

5. ADJUSTMENT OF THE STRIPPER MAY BE REQUIRED WHEN MOVING THE APPLICATOR BETWEEN BENCH AND LEADMAKER APPLICATIONS.

(6) APPLY PART NUMBER 1-23419-5 LOCTITE TO THREADS OF ITEMS 62 & 180.
APPLY PART NUMBER 2-23419-6 LOCTITE TO THREADS OF ITEM 242.

(7) GREASE THREADS, GROOVE AND O-RING ON ITEMS 139 & 152.

(8) MAGNET MUST BE ORIENTED CORRECTLY IN ORDER TO PROPERLY ACTUATE THE COUNTER.

(9) CRIMP HEIGHT REFERENCE SETTING WAS THE SETTING USED WHEN THE APPLICATOR WAS QUALIFIED AT THE FACTORY. ADJUSTMENT MAY BE NECESSARY WHEN RUNNING APPLICATOR IN THE FIELD.

(10) SPARE FEED CAM STORAGE LOCATION REFER TO INSTRUCTION SHEET FOR ADDITIONAL INFORMATION.

(11) TO CONVERT THE APPLICATOR TO A NON-CARRIER CUTTING STYLE, REMOVE ITEM 13 AND ATTACH TO THE LOCATION ON BACK SIDE OF THE HOUSING. REFER TO INSTRUCTION SHEET FOR ADDITIONAL INFORMATION.

(12) THIS APPLICATOR APPLIES TERMINAL WITH A SEAL. INSULATION RANGE QUOTED IS THAT OF THE TERMINAL. THE SEAL INSULATION RANGE IS Ø1.40-2.00mm.

(13) APPLY TORQ-SEAL IN ALLEN SOCKET TO FILL HOLE AFTER FLAT HD HAS BEEN ADJUSTED TO CORRECT HEIGHT AT QUALIFICATION. APPLY #1-23419-5 LOC-TITE TO THREADS.

(14) MUST BE FED OFF OF SLOT ON CARRIOR STRIP

(15) THIS APPLICATOR IS SPECIFIC FOR USE IN A STRIPPER SEAL TERMINATING UNIT.

*WARNING
ON INSTALLATION, SET WIRE DISC, ITEM 40 TO LARGEST WIRE SIZE SETTING. USE OF SETTINGS BELOW MINIMUM REQUIRED CRIMP HEIGHT SETTING WILL CAUSE DAMAGE TO CRIMP TOOLING.

SET UP GAUGE	LOC	DIST
2119599-1	A	66

REVISIONS					
P	LTR	DESCRIPTION	DATE	DWN	APVD
	-	SEE SHEET 1	-	-	-

NOTE	-77	-27	-25	-22	-21	PART NO	DESCRIPTION	ITEM NO
	-	1	1	1	1	2119782-1	FINE ADJUST HEAD ASM, PACIFIC STYLE	251
	-	-	-	1	-	2119640-1	PUSH ROD, AIR FEED	250
	-	-	-	1	-	1803259-1	BUSHING, FLANGED	249
	-	1	1	1	1	1-22279-3	SPRING, COMPRESSION	246
	-	1	1	1	1	2119082-1	CAM, SNAIL, INSULATION ADJUSTMENT	244
	-	1	1	1	1	2079764-1	WASHER, WAVE SPRING, CREST-TO-CREST	243
(6)	-	1	1	1	1	2119083-1	RETAINER, INSULATION DIAL	242
	-	1	1	1	1	7-18023-7	SCR, SKT HD CAP M3 X 4.0	241
	-	-	2	-	-	2168400-6	SHCS, LOW HEAD, RoHS, M5 X 16	240
	-	-	-	-	1	2119580-1	MECHANICAL FEED ASSEMBLY	239
	-	-	-	1	-	2063440-1	AIR FEED MODULE	238
	-	-	1	-	-	2119740-2	TAG,IDENTIFICATION	213
	-	-	1	-	-	1901094-3	SPACER, FEEDER	198
	-	1	1	1	1	4-1722335-3	STRIPPER, SIDE FEED	182
	-	1	1	1	1	1-5018030-0	NUT, HEX, REG, RoHS, M3.5	181
(6)	-	1	1	1	1	1-1752354-9	STANDOFF,HOLD-DOWN	180
	-	1	1	1	1	993111-1	PIN, SLOTTED SPRING 3.0 X 20.0	177
	-	1	1	1	1	5-22280-0	SPRING, COMPRESSION	176
	-	1	1	1	1	1752353-3	GUIDE PIN,HOLDDOWN	175
	-	1	1	1	1	1901680-2	GUIDE PIN,HOLDDOWN	174
	-	-	-	2	-	21045-3	RING, RETAIN, EXTERN, 3/16 CRESCENT	172
	-	1	1	1	1	994969-1	MAGNET, RARE EARTH HIGH ENERGY	166
	-	REF	REF	REF	REF	994970-2	COUNTER, MAGNETIC	164
	-	-	-	1	-	240638-1	SPRING, FEED FINGER	163
(7)	-	1	1	1	1	8-21084-1	O-RING, .801 ID, .070 DIA. MAT.	152
	-	-	-	1	-	2119641-2	FEED CAM, AIR FEED	151
	-	1	1	1	1	2119798-2	DETENT PIN	145
	-	1	1	1	1	2079383-8	SCR, BHSC, RoHS (M4 X 16)	144
	-	4	4	4	4	2168400-5	SHCS, LOW HEAD, RoHS, M4 X 20	143
	-	-	-	-	1	2119653-2	FEED CAM, POST FEED	142
	-	1	1	1	1	2-2119656-2	APPLICATOR BASIC ASSEMBLY, SF	141
	-	1	1	1	1	2119650-1	RAM, ASIAN STYLE, SIDE FEED	140
(7)	-	1	1	1	1	2119092-2	BOLT, ADJUSTMENT	139
	-	-	-	1	-	3-23627-7	PIN, RETAIN, GRVD, 3/16 X .854	137
	-	-	-	1	-	2119799-1	HOLDER,FEED FINGER, AF	136
	-	-	REF	-	-	SEE NOTE 4	MEMORY CHIP, PROGRAMMED	135
	-	-	1	-	-	1633743-1	SERVO FEED LATCH ASM	133
	-	1	1	1	1	1-18028-2	WASHER, FLAT, REG M4	119
	-	-	REF	-	-	2119944-1	FEED FINGER ASSEMBLY,SF	117
	-	1	1	1	1	455888-6	SPACER, CRIMPER	82
	-	1	1	1	1	2119956-1	DOCUMENTATION PACKAGE	71
	-	1	1	1	1	1-2119791-0	DEPRESSOR, WIRE	70
	-	1	-	1	1	2119740-1	TAG,IDENTIFICATION	67
	-	2	2	2	2	2168078-1	SCREW, DRIVE, RH, RoHS, 2 x .188	66
	-	1	1	1	1	2119793-1	LIMITER, ADJUSTMENT BOLT	63
(6)	-	3	3	3	3	992763-5	SCR, SET, SOC, CONE PNT, M3 x 4.0	62
	-	-	-	1	1	5-18022-5	SCR, HEX HD CAP, M4 X 6.0	59
	-	1	1	1	1	985575-3	SCR, FLT SKT HD CAP M3 X 10.0	57
	-	-	-	1	1	1338685-1	PAWL, FEED	56
	-	-	-	1	2	18023-9	SCR, SKT HD CAP M4 X 6.0	49
	-	-	-	-	1	2119652-1	FEED CAM, PRE FEED	48
	-	1	1	1	1	2079383-7	SCR, BHSC, RoHS (M8 X 25)	41
	-	1	1	1	1	2119645-1	DISC, NUMBERED FA WIRE ADJUSTMENT	40
	-	1	1	1	1	2119957-1	APPLICATOR SHIM PACK	39
	-	1	1	1	1	2119644-1	RAM WASHER, PRECISION	38
	-	1	1	1	1	1-1752356-7	SUPPORT, TERMINAL	34
	-	2	2	2	2	2079383-5	SCR, BHSC, RoHS (M4 X 20)	33
	-	1	1	1	1	2161328-1	HEX HEAD, FLANGED, M5 x 8mm LONG	32
	-	1	1	1	1	1320908-7	SPACER, STRIP GUIDE	30
	-	1	1	1	1	2119959-2	ASSEMBLY, STRIP GUIDE	29
	-	1	1	1	1	455888-3	SPACER, CRIMPER	28
	-	1	1	1	1	1320928-2	STRIP GUIDE	24
(11) (1)	-	1	1	1	1	2119806-1	INSERT, SHEAR	13
	-	1	1	1	1	3-22280-3	SPRING, COMPRESSION	12
	-	1	1	1	1	1-356885-4	STOP, SHEAR	11
(1)	-	1	1	1	1	2119805-1	SHEAR HOLDER, FRONT	10
(1)	-	1	1	1	1	318707-1	FLOATING SHEAR, FRONT	9
(1)	1	1	1	1	1	9-1333204-4	ANVIL, COMBINATION	8
	-	1	1	1	1	2119781-5	DEPRESSOR, SHEAR	5
	-	1	1	1	1	238011-1	BLOCK, CRIMPER SPACER	4
(1)	1	1	1	1	1	2-1803019-2	CRIMPER, INSULATION O	3
(1)	1	1	1	1	1	2-456405-8	CRIMPER, WIRE PREMIUM	1

PACIFIC VERSION
Shown on sheets 3 of 4 & 4 of 4
(Atlantic version shown on sheets 1 of 4 & 2 of 4)

THIS DRAWING IS A CONTROLLED DOCUMENT FOR TYCO ELECTRONICS CORPORATION IT IS SUBJECT TO CHANGE AND THE CONTROLLING ENGINEERING ORGANIZATION SHOULD BE CONTACTED FOR THE LATEST REVISION.

DIMENSIONS:	mm
TOLERANCES UNLESS OTHERWISE SPECIFIED:	0 PLC ± / 1 PLC ± / 2 PLC ± / 3 PLC ± / 4 PLC ± / ANGLES ±-
MATERIAL	- / -
FINISH	- / -
DWN	K.HUANG 24SEP2013
CHK	L.ZHANG 24SEP2013
APVD	U.GUO 24SEP2013
PRODUCT SPEC	-
APPLICATION SPEC	-
WEIGHT	-
NAME	Ocean Side Feed Applicator -
SIZE	A1
CAGE CODE	00779
DRAWING NO	C-2266056
RESTRICTED TO	-
SCALE	1:2
SHEET	3 OF 4
REV	B1

TE Connectivity
Harrisburg, PA 17105-3608

Customer Accessible Production Drawing

SHEETS 1 & 2 ARE NOT REQUIRED FOR PACIFIC VERSION

THIS DRAWING IS UNPUBLISHED. RELEASED FOR PUBLICATION 20
© COPYRIGHT 20 BY TYCO ELECTRONICS CORPORATION. ALL RIGHTS RESERVED.

LOC	DIST
A	66

REVISIONS

P	LTR	DESCRIPTION	DATE	DWN	APVD
	-	SEE SHEET 1	-	-	-

FEED TYPE

MECHANICAL

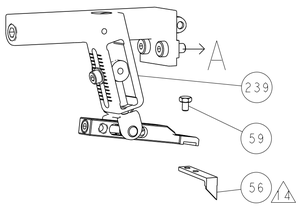

PNEUMATIC

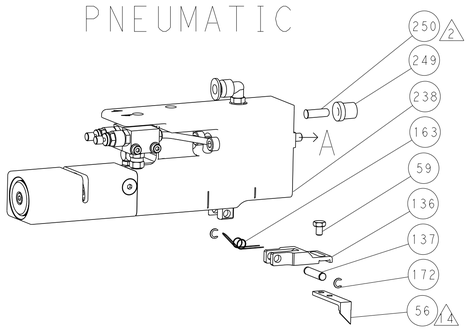

SERVO LATCH PLATE

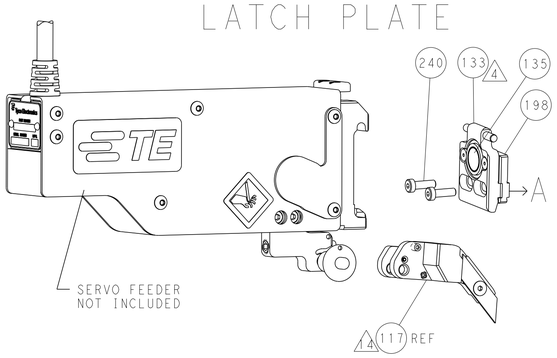

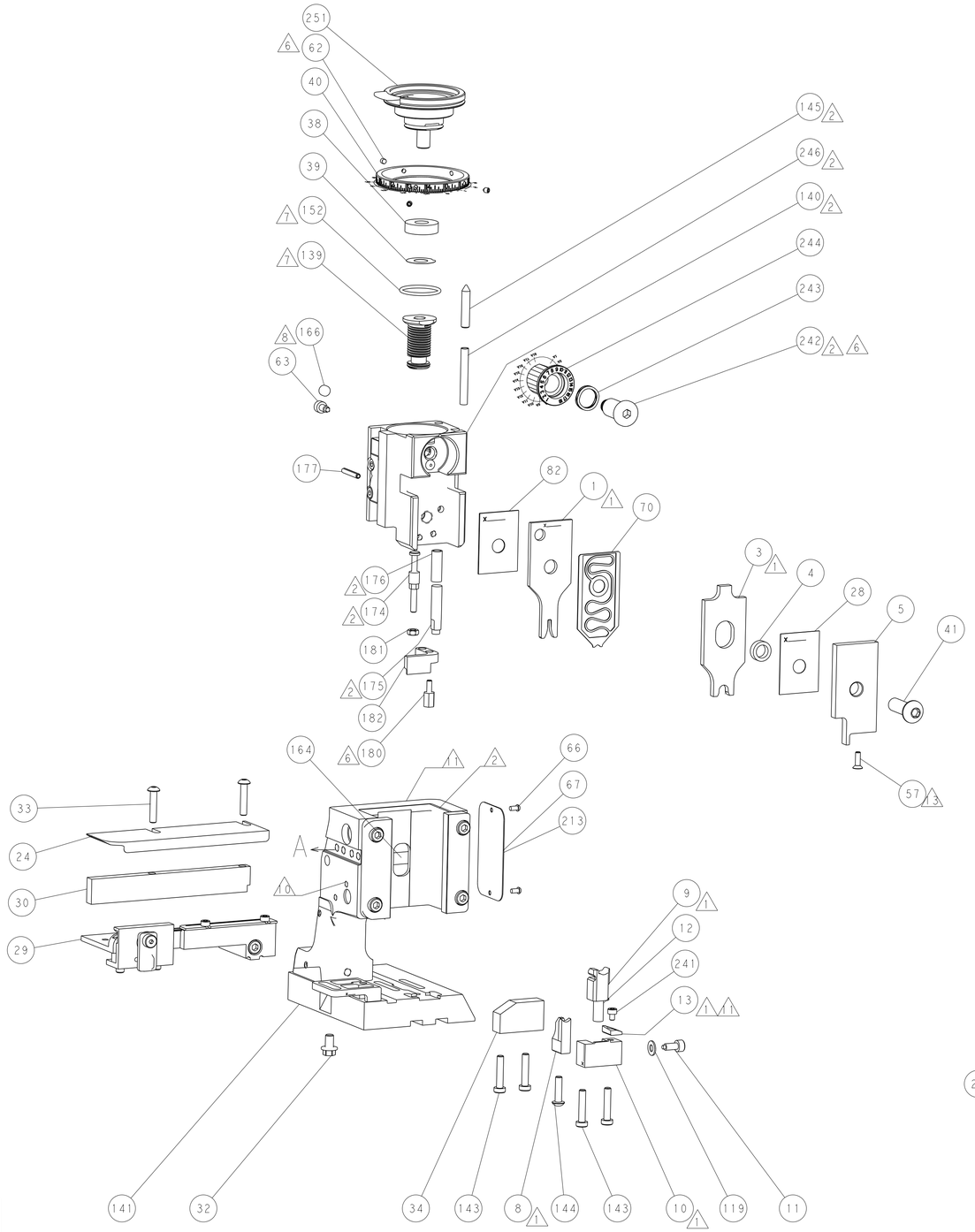

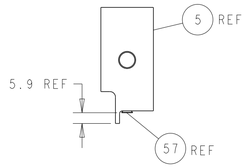

SHEAR DEPRESSOR DETAIL

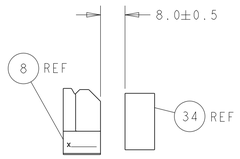

TERMINAL SUPPORT LOCATION

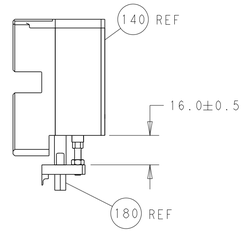

HOLDDOWN SET-UP

ITEM 30 LOCATED AT
FRONT HOLES

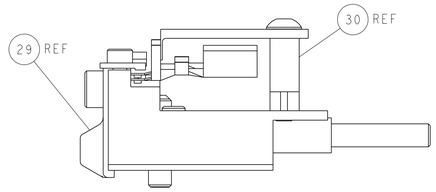

FEED TRACK POSITION
GUIDE BY INSULATION BARREL

CAM POSITIONS

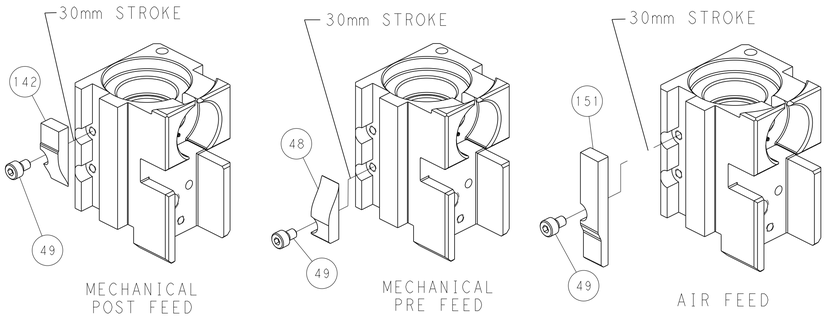

MECHANICAL
POST FEED

MECHANICAL
PRE FEED

AIR FEED

PACIFIC VERSION

Shown on sheets 3 of 4 & 4 of 4
(Atlantic version shown on sheets 1 of 4 & 2 of 4)

THIS DRAWING IS A CONTROLLED DOCUMENT FOR TYCO ELECTRONICS CORPORATION
IT IS SUBJECT TO CHANGE AND THE CONTROLLING ENGINEERING ORGANIZATION
SHOULD BE CONTACTED FOR THE LATEST REVISION

DIMENSIONS: mm

TOLERANCES UNLESS OTHERWISE SPECIFIED:
0 PLC ±
1 PLC ±
2 PLC ±
3 PLC ±
4 PLC ±
ANGLES ±

MATERIAL -
-

FINISH -
-

DWN	K.HUANG	24SEP2013
CHK	L.ZHANG	24SEP2013
APVD	U.GUO	24SEP2013
PRODUCT SPEC	-	
APPLICATION SPEC	-	
WEIGHT	-	

TE Connectivity
Harrisburg, PA 17105-3608

NAME: Ocean Side Feed Applicator -

SIZE	CAGE CODE	DRAWING NO	RESTRICTED TO
A1	00779	C-2266056	-

Customer Accessible Production Drawing | SCALE 1:2 | SHEET 4 OF 4 | REV B1

AMP 4805 REV 31MAR2000

SHEETS 1 & 2 ARE NOT REQUIRED FOR PACIFIC VERSION

Mouser Electronics

Authorized Distributor

Click to View Pricing, Inventory, Delivery & Lifecycle Information:

TE Connectivity:

2266056-1