THIS DRAWING IS UNPUBLISHED. RELEASED FOR PUBLICATION 20
© COPYRIGHT 20 BY - ALL RIGHTS RESERVED.

REVISIONS

P	LTR	DESCRIPTION	DATE	DWN	APVD
	BA3	REVISED PER ECO-15-004852	27MAR2015	DLD	DLD
	BA4	REVISED PER ECO-20-012412	08SEP2020	AP	HDC

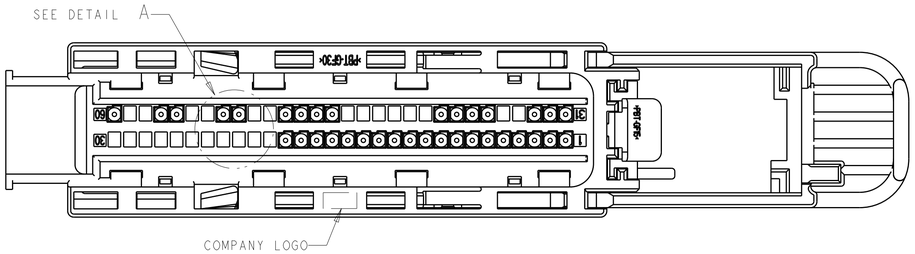

ALTERNATE CONSTRUCTION

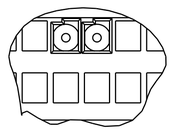

DETAIL A
SCALE 4:1

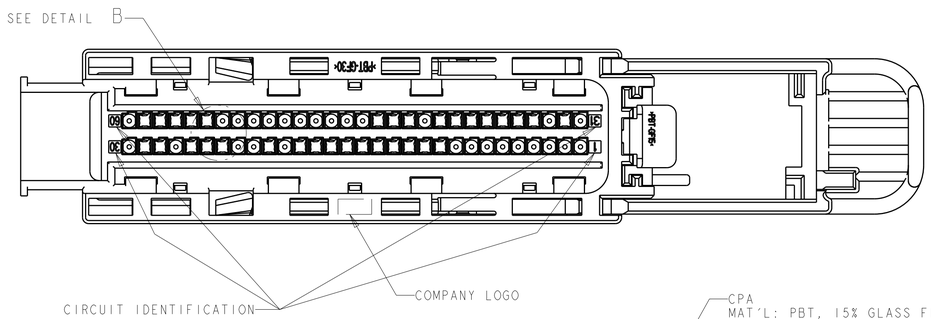

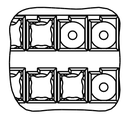

DETAIL B
SCALE 4:1

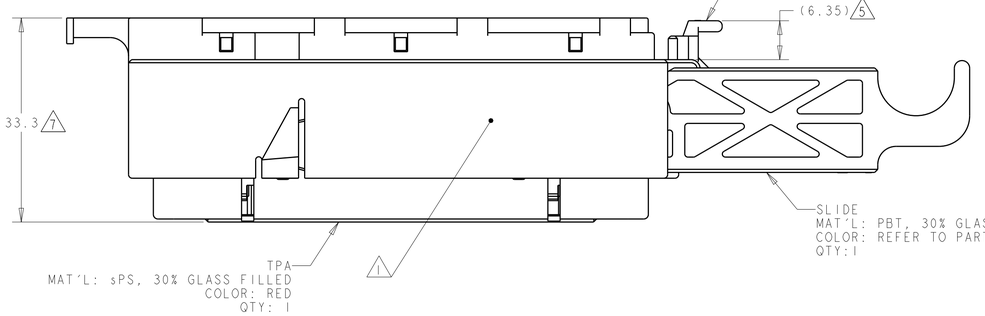

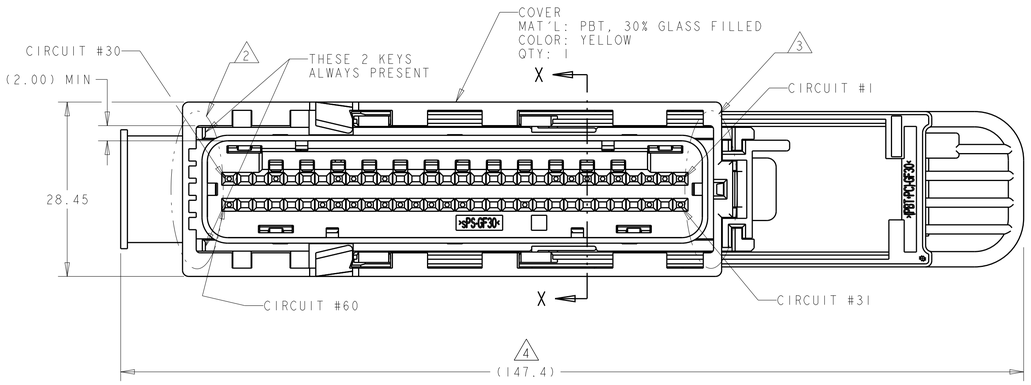

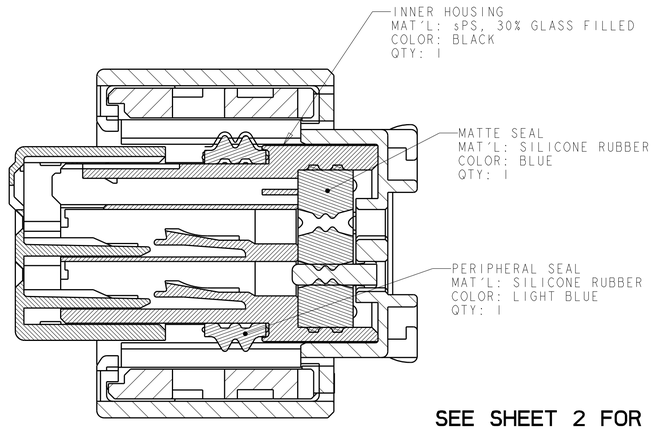

SECTION X-X
SCALE 4:1

1. TE CONNECTIVITY (TE) PART NUMBER AND JULIAN DATE CODE MARKED ON THIS SIDE.
2. SEE KEYING ARRANGEMENT TABLE FOR KEYWAY LOCATIONS, SEE SHEET 6.
3. SEE KEYING ARRANGEMENT TABLE FOR KEY LOCATIONS, SEE SHEET 6.
4. SLIDE SHOWN IN UNLOCKED POSITION.
5. CPA SHOWN IN UNLOCKED POSITION.
6. NOTE DELETED.
7. TPA SHOWN IN UNLOCKED POSITION.
8. REFER TO DRAWING C-638623 AND/OR C-1488143 FOR MATING CONNECTOR INFORMATION.
9. NOT FOR PRODUCTION USE.
10. MISCELLANEOUS COMPONENT ENGAGE/DISENGAGE FORCE, SAE/USCAR-2, SECTION 5.4.4.4, G.M. APPROVED DEVIATION:
    TPA (PRE-SET TO FULL) FORCES TO BE 15 TO 55 NEWTONS.
11. MISCELLANEOUS COMPONENT ENGAGE/DISENGAGE FORCE, SAE/USCAR-2, SECTION 5.4.4.4, G.M. APPROVED DEVIATION:
    CPA (PRE-SET TO FULL) FORCES TO BE 7 TO 30 NEWTONS.
12. POLARIZATION FEATURE EFFECTIVENESS, SAE/USCAR-2, SECTION 4.3.4, G.M. APPROVED DEVIATION:
    DURING MISMATING FORCE TESTING CERTAIN CONNECTOR/HEADER COMBINATIONS MAY ALLOW ELECTRICAL CONTACT OF UP TO 26 PINS BELOW THE REQUIRED 220 NEWTON FORCE.
13. CONNECTOR-CONNECTOR MATING/UNMATING FORCE, SAE/USCAR-2, SECTION 5.4.2.4, G.M. APPROVED DEVIATION:
    MATING FORCE IS ACCEPTABLE FOR THE CONNECTOR/HEADER SYSTEM UP TO 50 TERMINALS AT ≦ 75 NEWTONS.
14. APPLICABLE TE GET FEMALE TERMINALS:
    FOR 0.22/0.35 WIRE SECTION, TERMINAL PART NUMBER 1393364-2
    FOR 0.50/0.0.75 WIRE SECTION, TERMINAL PART NUMBER 1393365-2
15. REFER TO POGO PIN FOR GET SOCKET TERMINAL ON TE DRAWING #114-18411 FOR CONTINUITY TESTING.
16. PRELIMINARY NOT RELEASED FOR PRODUCTION.

SEE SHEET 2 FOR HEADER INTERFACE SPECIFICATION,
SHEET 6 FOR KEYING ARRANGEMENTS,
AND SHEETS 7, 8 & 9 FOR CIRCUIT ARRANGEMENTS

SEE SHEET 3
PART NUMBER

THIS DRAWING IS A CONTROLLED DOCUMENT.

DIMENSIONS: mm
TOLERANCES UNLESS OTHERWISE SPECIFIED:
0 PLC ±-
1 PLC ±0.5
2 PLC ±0.20
3 PLC ±-
4 PLC ±-
ANGLES ±-

MATERIAL - SEE CALLOUT
FINISH - SEE CALLOUT

DWN J.R.SHUEY 31MAR2000
CHK V.KANE 31MAR2000
APVD J.M.MYER 31MAR2000
PRODUCT SPEC -
APPLICATION SPEC 114-13060
WEIGHT -

TE Connectivity

NAME ASSEMBLY, FEMALE, 60 WAY GET SDM CONNECTOR (SHUNTLESS VERSION)

SIZE A1 | CAGE CODE 00779 | DRAWING NO C-638595 | RESTRICTED TO -

CUSTOMER DRAWING | SCALE 2:1 | SHEET 1 OF 10 | REV BA4

4805 (3/13)

THIS DRAWING IS UNPUBLISHED. RELEASED FOR PUBLICATION 20
© COPYRIGHT 20 BY - ALL RIGHTS RESERVED.

APPLICABLE HEADER INTERFACE SPECIFICATION

SHOWN WITH KEYING OPTION K1
SCALE 3:1

REVISIONS					
P	LTR	DESCRIPTION	DATE	DWN	APVD
	-	SEE SHEET 1	-	-	-

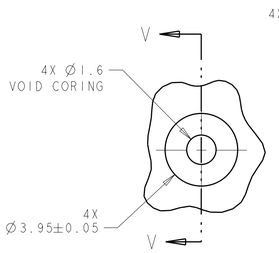

DETAIL W
SCALE 6:1

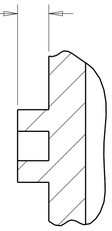

SECTION V-V

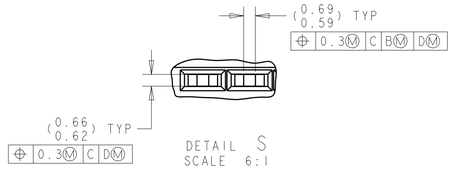

DETAIL S
SCALE 6:1

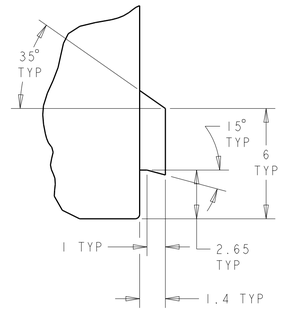

DETAIL R
SCALE 6:1

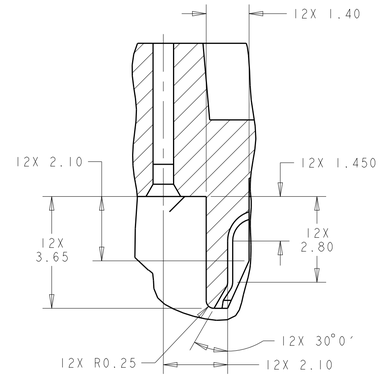

SECTION S-S

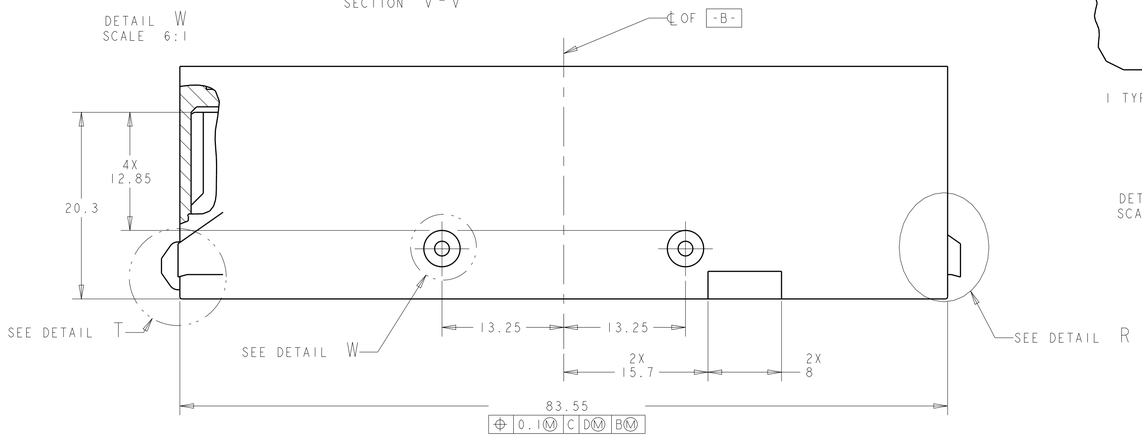

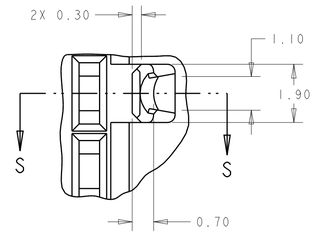

DETAIL U
ROTATED 90° CLOCKWISE
SCALE 10:1

NOTE(S): UNLESS OTHERWISE SPECIFIED

1. PART MUST CONFORM TO THE LATEST LEVEL OF USCAR DATED 951010.
2. ALL PLASTIC PARTS MUST HAVE MATERIAL IDENTIFICATION SYMBOLS CLEARLY MARKED, WHEREVER PACKAGE SIZE PERMITS.
3. GENERAL TOLERANCES: ±0.2 ALL ONE PLACE DIMENSIONS, ±0.1 ALL TWO PLACE DIMENSIONS, ±2° ALL ANGULAR PLACE DIMENSIONS
4. ALL RADIUS ±0.5.
5. PIN PLATING DETAILS . . .
6. (SEALED INTERFACES ONLY) SEALING SURFACE MUST BE SMOOTH AND FREE OF PARTING LINES.
7. PARTS ARE TO BE FREE OF SCRATCHES, DISCOLORATION, SALT RESIDUE OR OTHER IMPERFECTIONS THAT MAY AFFECT FUNCTION OR FIT OF PART.
8. DRAFT ANGLE PERMISSIBLE ONLY WITHIN PRINT TOLERANCE.

9. SEALING SURFACE, NO WITNESS LINES OR DAMAGE PERMITTED.
10. VENT HOLE SIZE AND LOCATION OPTIONAL.
11. THIS AREA TO REMAIN CLEAR FOR HARNESS ASSEMBLY.
12. HOUSING MATERIAL SELECTION BASED ON PERFORMANCE REQUIRED FOR END APPLICATION AND SOLDERING PROCESS. POLYESTER (PBT) - 30% GLASS TESTED TO USCAR2, REV 3, CLASS 2, MAX. AMBIENT 100 DEGREE C.
13. CIRCUIT NUMBERS 1.0 HIGH CHARACTERS RAISED 0.05 - 0.1 IN A 0.10 TO 0.15 RECESSED AREA.

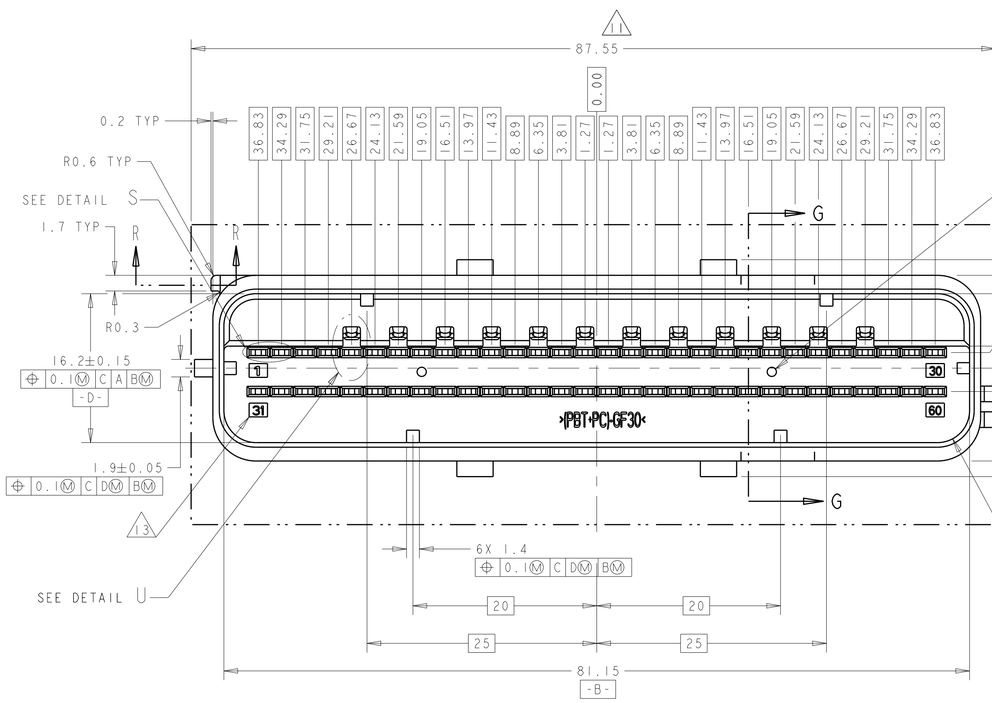

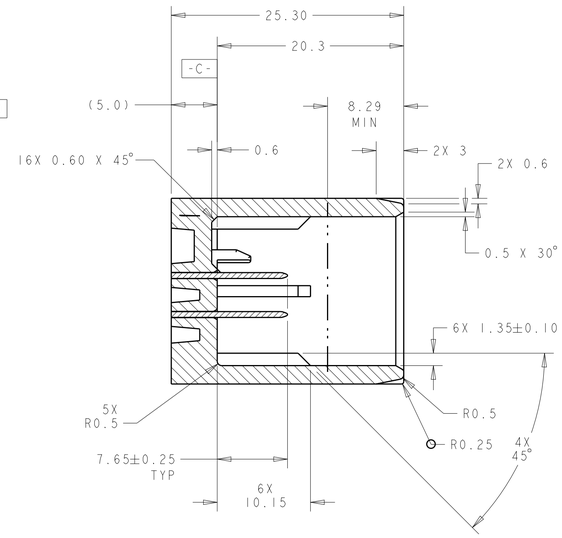

SECTION G-G

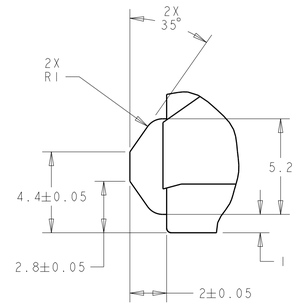

DETAIL T
SCALE 6:1

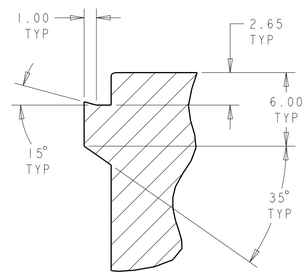

SECTION R-R
SCALE 4:1

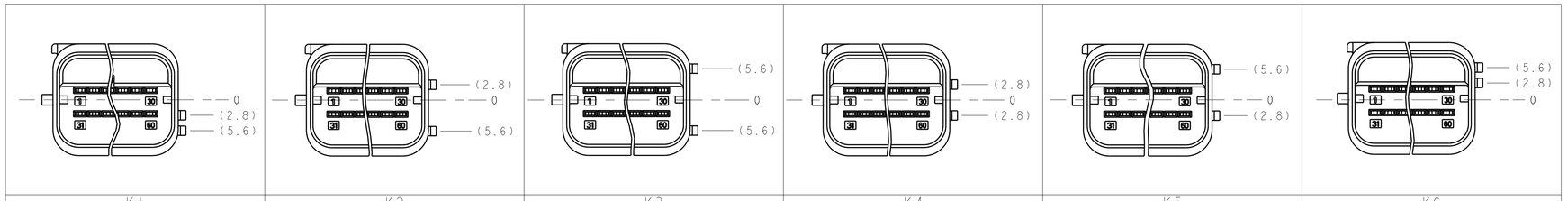

KEYING ARRANGEMENTS FOR HEADER INTERFACE

THIS DRAWING IS A CONTROLLED DOCUMENT.	DWN J.R.SHUEY 31MAR2000	TE Connectivity	
DIMENSIONS: mm	CHK V.KANE 31MAR2000		
TOLERANCES UNLESS OTHERWISE SPECIFIED: 0 PLC ±, 1 PLC ±0.5, 2 PLC ±0.20, 3 PLC ±, 4 PLC ±, ANGLES ±	APVD J.M.MYER 31MAR2000	NAME ASSEMBLY, FEMALE, 60 WAY GET SDM CONNECTOR (SHUNTLESS VERSION)	
	PRODUCT SPEC -		
	APPLICATION SPEC 114-13060	SIZE A1 / CAGE CODE 00779 / DRAWING NO C-638595	RESTRICTED TO -
MATERIAL - SEE CALLOUT	FINISH - SEE CALLOUT	WEIGHT -	
		CUSTOMER DRAWING	SCALE 2:1 / SHEET 2 OF 10 / REV BA4

THIS DRAWING IS UNPUBLISHED. RELEASED FOR PUBLICATION 20
© COPYRIGHT 20 BY - ALL RIGHTS RESERVED.

REVISIONS

P	LTR	DESCRIPTION	DATE	DWN	APVD
	-	SEE SHEET 1	-	-	-

	GM PART NUMBER	SLIDE COLOR	CIRCUIT ARRANGEMENT (SEE TABLE ON SH 5 & 6)	KEYING ARRANGEMENT (SEE TABLE ON SHEET 5)	PART NUMBER
OBSOLETE	19206486	BLACK	C120	K1	~~7-184464-2~~
	19206484	BLACK	C119	K1	7-184464-0
	---	BLACK	C118	K6	6-184464-9
OBSOLETE	---	BLACK	C116	K2	~~6-184464-7~~
	---	BLACK	C103	K1	6-184464-6
	---	BLACK	C114	K6	6-184464-5
OBSOLETE	---	BLACK	C113	K1	~~6-184464-4~~
	---	BLACK	C112	K1	6-184464-3
OBSOLETE	---	BLACK	C111	K3	~~6-184464-2~~
OBSOLETE	---	BLACK	C110	K6	~~6-184464-1~~
	---	BLACK	C106	K5	6-184464-0
	---	BLACK	C105	K4	5-184464-9
	---	BLACK	C106	K3	5-184464-8

	SLIDE COLOR	CIRCUIT ARRANGEMENT (SEE TABLE ON SH 5 & 6)	KEYING ARRANGEMENT (SEE TABLE ON SHEET 5)	PART NUMBER
OBSOLETE	BLACK	C101	K3	~~5-184464-3~~
	BLACK	C99	K6	5-184464-1
	BLACK	C98	K1	5-184464-0
OBSOLETE	BLACK	C97	K3	~~4-184464-9~~
OBSOLETE	BLACK	C96	K6	~~4-184464-8~~
	BLACK	C95	K1	4-184464-7
	BLACK	C94	K1	4-184464-6
	BLACK	C93	K1	4-184464-5
	BLACK	C92	K6	4-184464-4
	GREEN	C91	K6	4-184464-3
	BLUE	C88	K3	3-184464-8
	YELLOW	C86	K3	3-184464-6
	BROWN	C85	K3	3-184464-5
	GREY	C22	K7	3-184464-1
	GREEN	C66	K3	3-184464-0
	GREY	C65	K3	2-184464-9
	BLACK	C79	K6	2-184464-6
	BLACK	C78	K6	2-184464-5
	BLACK	C77	K6	2-184464-4
	BLACK	C53	K2	2-184464-3
	BLACK	C76	K6	2-184464-2
	BLACK	C72	K1	2-184464-1
	BLACK	C70	K1	1-184464-9
	BLACK	C68	K1	1-184464-7
OBSOLETE	BLACK	C67	K1	~~1-184464-6~~
	BROWN	C48	K4	184464-9
OBSOLETE	BLACK	C58	K6	~~184464-5~~
	BLACK	C57	K6	184464-4

	SLIDE COLOR	CIRCUIT ARRANGEMENT (SEE TABLE ON SH 5 & 6)	KEYING ARRANGEMENT (SEE TABLE ON SHEET 5)	PART NUMBER
OBSOLETE	BLACK	C3	K99	~~9-638595-7~~
9	BLACK	C3	K99	8-638595-5
	BLACK	C48	K4	6-638595-4
OBSOLETE	YELLOW	C30	K4	~~6-638595-3~~
	YELLOW	C47	K4	6-638595-2
	GREEN	C19	K5	6-638595-0
	GREY	C46	K3	5-638595-9
	GREEN	C45	K3	5-638595-8

	SLIDE COLOR	CIRCUIT ARRANGEMENT (SEE TABLE ON SH 5 & 6)	KEYING ARRANGEMENT (SEE TABLE ON SHEET 5)	PART NUMBER
	BLUE	C22	K6	5-638595-3
	GREEN	C42	K6	5-638595-1
	BLUE	C41	K6	5-638595-0
	BLUE	C39	K6	4-638595-8
	BLACK	C38	K6	4-638595-7
	BLACK	C21	K3	4-638595-6
	BLACK	C16	K4	4-638595-5
	BLACK	C37	K2	4-638595-4
OBSOLETE	BROWN	C31	K1	~~3-638595-8~~
	BROWN	C29	K1	3-638595-5
	GREY	C29	K5	3-638595-4
	YELLOW	C28	K2	3-638595-3
	BLUE	C22	K3	2-638595-9
OBSOLETE	BLUE	C26	K3	~~2-638595-8~~
	BLACK	C11	K1	2-638595-7
	BROWN	C21	K3	2-638595-4
	ORANGE	C22	K3	2-638595-2
	BLACK	C20	K1	2-638595-0
	BLACK	C9	K1	1-638595-9
	BLACK	C18	K2	1-638595-7
OBSOLETE	GREEN	C17	K5	~~1-638595-6~~
	BLUE	C16	K4	1-638595-5
OBSOLETE	BLACK	C4	K1	~~638595-1~~

THIS DRAWING IS A CONTROLLED DOCUMENT.

DIMENSIONS: mm

TOLERANCES UNLESS OTHERWISE SPECIFIED:
0 PLC ±-
1 PLC ±0.5
2 PLC ±0.20
3 PLC ±-
4 PLC ±-
ANGLES ±-

MATERIAL - SEE CALLOUT

FINISH - SEE CALLOUT

DWN J.R.SHUEY 31MAR2000
CHK V.KANE 31MAR2000
APVD J.M.MYER 31MAR2000

PRODUCT SPEC -

APPLICATION SPEC 114-13060

WEIGHT -

TE Connectivity

NAME ASSEMBLY, FEMALE, 60 WAY GET SDM CONNECTOR (SHUNTLESS VERSION)

SIZE	CAGE CODE	DRAWING NO	RESTRICTED TO
A1	00779	C-638595	-

CUSTOMER DRAWING

SCALE 2:1 SHEET 3 OF 10 REV BA4

4805 (3/13)

THIS DRAWING IS UNPUBLISHED. RELEASED FOR PUBLICATION 20
© COPYRIGHT 20 BY - ALL RIGHTS RESERVED.

REVISIONS

P	LTR	DESCRIPTION	DATE	DWN	APVD
	-	SEE SHEET 1	-	-	-

	13577852	BLACK	C134	K5	3-1924558-7
OBSOLETE	13502172	BLACK	C130	K3	~~2-1924558-2~~
OBSOLETE	13502171	BLACK	C120	K3	~~2-1924558-1~~
	13502170	BLACK	C42	K6	2-1924558-0
	13502169	BLACK	C91	K6	1-1924558-9
OBSOLETE	19206496	BLACK	C125	K4	~~1-1924558-8~~
OBSOLETE	19206495	BLACK	C126	K2	~~1-1924558-7~~
OBSOLETE	19206494	BLACK	C125	K1	~~1-1924558-6~~
OBSOLETE	19206493	BLACK	C124	K3	~~1-1924558-5~~
OBSOLETE	19206492	BLACK	C123	K3	~~1-1924558-4~~
	19206488	BLACK	C46	K3	1-1924558-0
	19152767	BLACK	C37	K2	1924558-8
	19180411	BLACK	C22	K3	1924558-7
	19179682	BLACK	C22	K6	1924558-5
	19179684	BLACK	C29	K5	1924558-2
	19179685	BLACK	C28	K2	1924558-1
	GM PART NUMBER	SLIDE COLOR	CIRCUIT ARRANGEMENT (SEE TABLE ON SH 5 & 6)	KEYING ARRANGEMENT (SEE TABLE ON SHEET 5)	PART NUMBER

THIS DRAWING IS A CONTROLLED DOCUMENT.

DIMENSIONS: mm

TOLERANCES UNLESS OTHERWISE SPECIFIED:
0 PLC ±-
1 PLC ±0.5
2 PLC ±0.20
3 PLC ±-
4 PLC ±-
ANGLES ±-

MATERIAL - SEE CALLOUT

FINISH - SEE CALLOUT

DWN J.R.SHUEY 31MAR2000
CHK V.KANE 31MAR2000
APVD J.M.MYER 31MAR2000

PRODUCT SPEC -

APPLICATION SPEC 114-13060

WEIGHT -

TE Connectivity

NAME ASSEMBLY, FEMALE, 60 WAY GET SDM CONNECTOR (SHUNTLESS VERSION)

SIZE	CAGE CODE	DRAWING NO	RESTRICTED TO
A1	00779	C-638595	-

CUSTOMER DRAWING | SCALE 2:1 | SHEET 4 OF 10 | REV DA4

4805 (3/13)

THIS DRAWING IS UNPUBLISHED. RELEASED FOR PUBLICATION 20
© COPYRIGHT 20 BY - ALL RIGHTS RESERVED.

REVISIONS

P	LTR	DESCRIPTION	DATE	DWN	APVD
	-	SEE SHEET 1	-	-	-

NOT INTENDED FOR PRODUCTION USE
SERVICE PART

9 BLACK	C3	K0	8-184464-7
SLIDE COLOR	CIRCUIT ARRANGEMENT (SEE TABLE ON SHEET 4)	KEYING ARRANGEMENT (SEE TABLE ON SHEET 4)	PART NUMBER

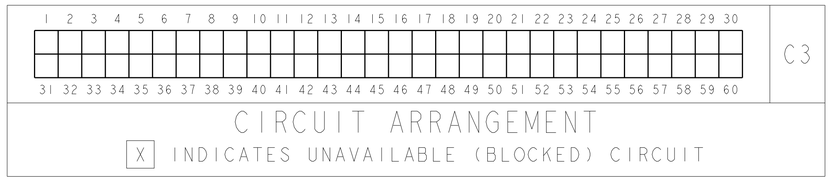

CIRCUIT ARRANGEMENT

X INDICATES UNAVAILABLE (BLOCKED) CIRCUIT

NOT INTENDED FOR PRODUCTION USE
SERVICE PART

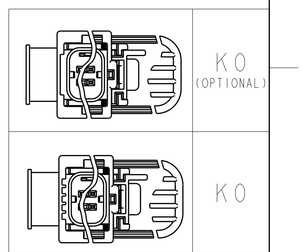

KEYING ARRANGEMENT
(▩ INDICATES PRESENCE OF KEYWAY OR ABSENCE OF KEY)

THIS DRAWING IS A CONTROLLED DOCUMENT.

DIMENSIONS: mm

TOLERANCES UNLESS OTHERWISE SPECIFIED:
0 PLC ±-
1 PLC ±0.5
2 PLC ±0.20
3 PLC ±-
4 PLC ±-
ANGLES ±-

MATERIAL - SEE CALLOUT
FINISH - SEE CALLOUT

DWN J.R.SHUEY 31MAR2000
CHK V.KANE 31MAR2000
APVD J.M.MYER 31MAR2000
PRODUCT SPEC -
APPLICATION SPEC 114-13060
WEIGHT -

TE Connectivity

NAME ASSEMBLY, FEMALE, 60 WAY GET SDM CONNECTOR (SHUNTLESS VERSION)

SIZE	CAGE CODE	DRAWING NO	RESTRICTED TO
A1	00779	C-638595	-

CUSTOMER DRAWING | SCALE 2:1 | SHEET 5 OF 10 | REV BA4

4805 (3/13)

THIS DRAWING IS UNPUBLISHED. RELEASED FOR PUBLICATION 20
© COPYRIGHT 20 BY - ALL RIGHTS RESERVED.

REVISIONS

P	LTR	DESCRIPTION	DATE	DWN	APVD
	-	SEE SHEET 1	-	-	-

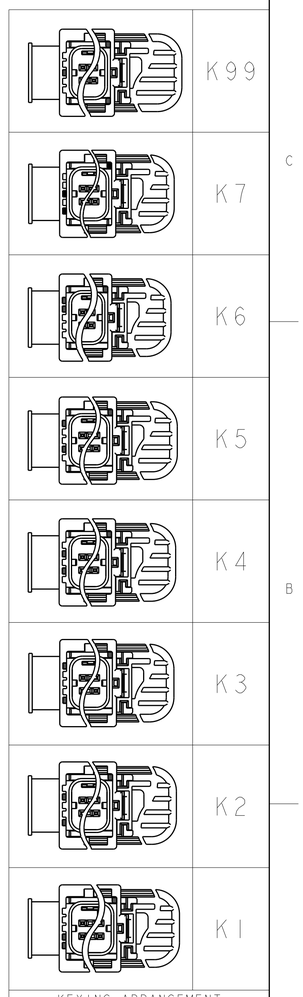

KEYING ARRANGEMENT
(▨ INDICATES PRESENCE OF KEYWAY OR ABSENCE OF KEY)

THIS DRAWING IS A CONTROLLED DOCUMENT.

DIMENSIONS: mm

TOLERANCES UNLESS OTHERWISE SPECIFIED:
0 PLC ±-
1 PLC ±0.5
2 PLC ±0.20
3 PLC ±-
4 PLC ±-
ANGLES ±-

MATERIAL - SEE CALLOUT

FINISH - SEE CALLOUT

DWN J.R.SHUEY 31MAR2000
CHK V.KANE 31MAR2000
APVD J.M.MYER 31MAR2000

PRODUCT SPEC -

APPLICATION SPEC 114-13060

WEIGHT -

TE Connectivity

NAME ASSEMBLY, FEMALE, 60 WAY GET SDM CONNECTOR (SHUNTLESS VERSION)

SIZE	CAGE CODE	DRAWING NO	RESTRICTED TO
A1	00779	C-638595	-

CUSTOMER DRAWING

SCALE 2:1 SHEET 6 OF 10 REV BA4

4805 (3/13)

THIS DRAWING IS UNPUBLISHED. RELEASED FOR PUBLICATION 20
© COPYRIGHT 20 BY - ALL RIGHTS RESERVED.

REVISIONS

P	LTR	DESCRIPTION	DATE	DWN	APVD
	-	SEE SHEET 1	-	-	-

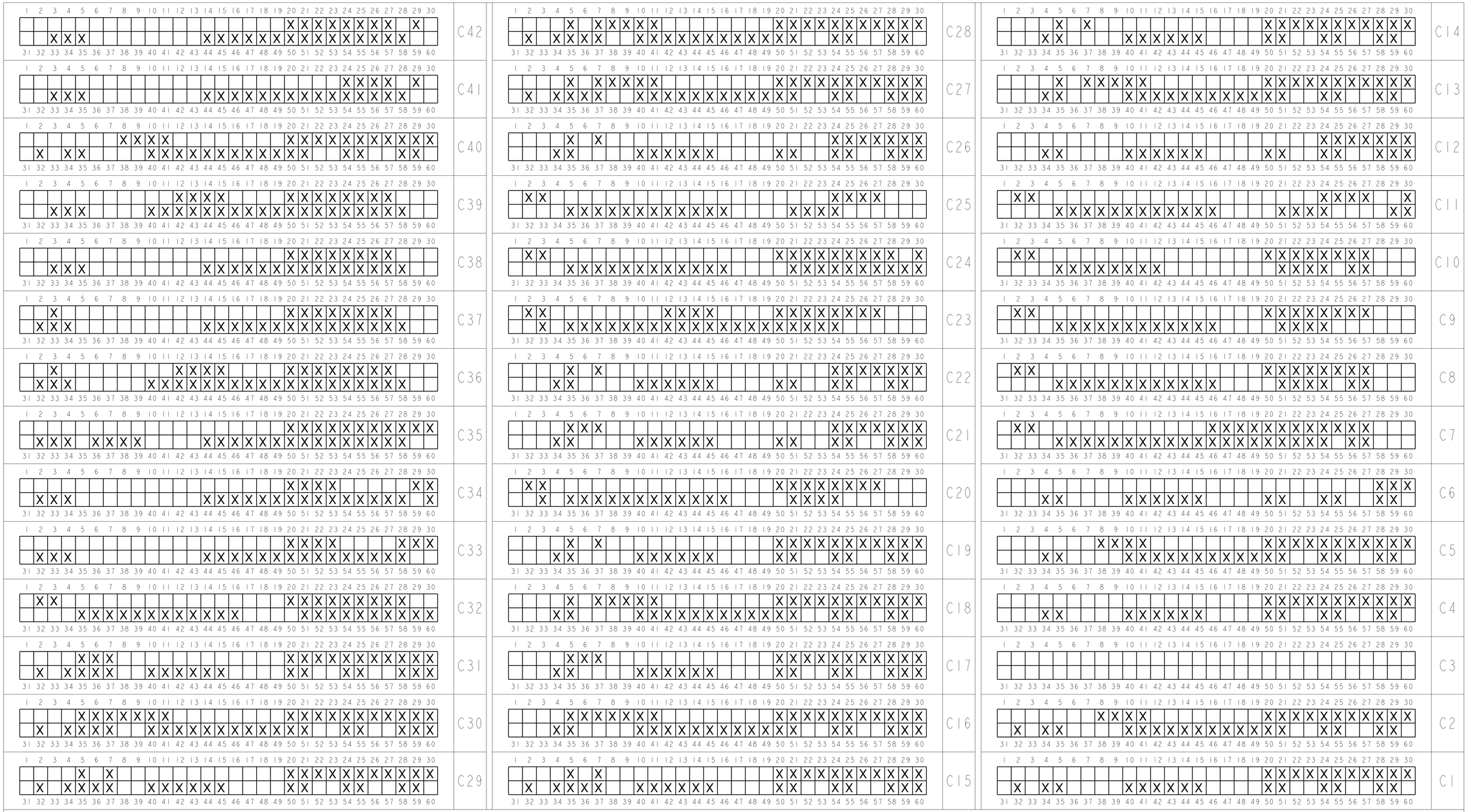

CIRCUIT ARRANGEMENT

X INDICATES UNAVAILABLE (BLOCKED) CIRCUIT

THIS DRAWING IS A CONTROLLED DOCUMENT.

DIMENSIONS: mm

TOLERANCES UNLESS OTHERWISE SPECIFIED:
0 PLC ±-
1 PLC ±0.5
2 PLC ±0.20
3 PLC ±-
4 PLC ±-
ANGLES ±-

MATERIAL - SEE CALLOUT

FINISH - SEE CALLOUT

DWN J.R.SHUEY 31MAR2000
CHK V.KANE 31MAR2000
APVD J.M.MYER 31MAR2000

PRODUCT SPEC -

APPLICATION SPEC 114-13060

WEIGHT -

TE Connectivity

NAME ASSEMBLY, FEMALE, 60 WAY GET SDM CONNECTOR (SHUNTLESS VERSION)

SIZE A1 | CAGE CODE 00779 | DRAWING NO C-638595 | RESTRICTED TO -

CUSTOMER DRAWING | SCALE 2:1 | SHEET 7 OF 10 | REV BA4

4805 (3/13)

THIS DRAWING IS UNPUBLISHED. RELEASED FOR PUBLICATION 20
© COPYRIGHT 20 BY - ALL RIGHTS RESERVED.

REVISIONS

P	LTR	DESCRIPTION	DATE	DWN	APVD
	-	SEE SHEET 1	-	-	-

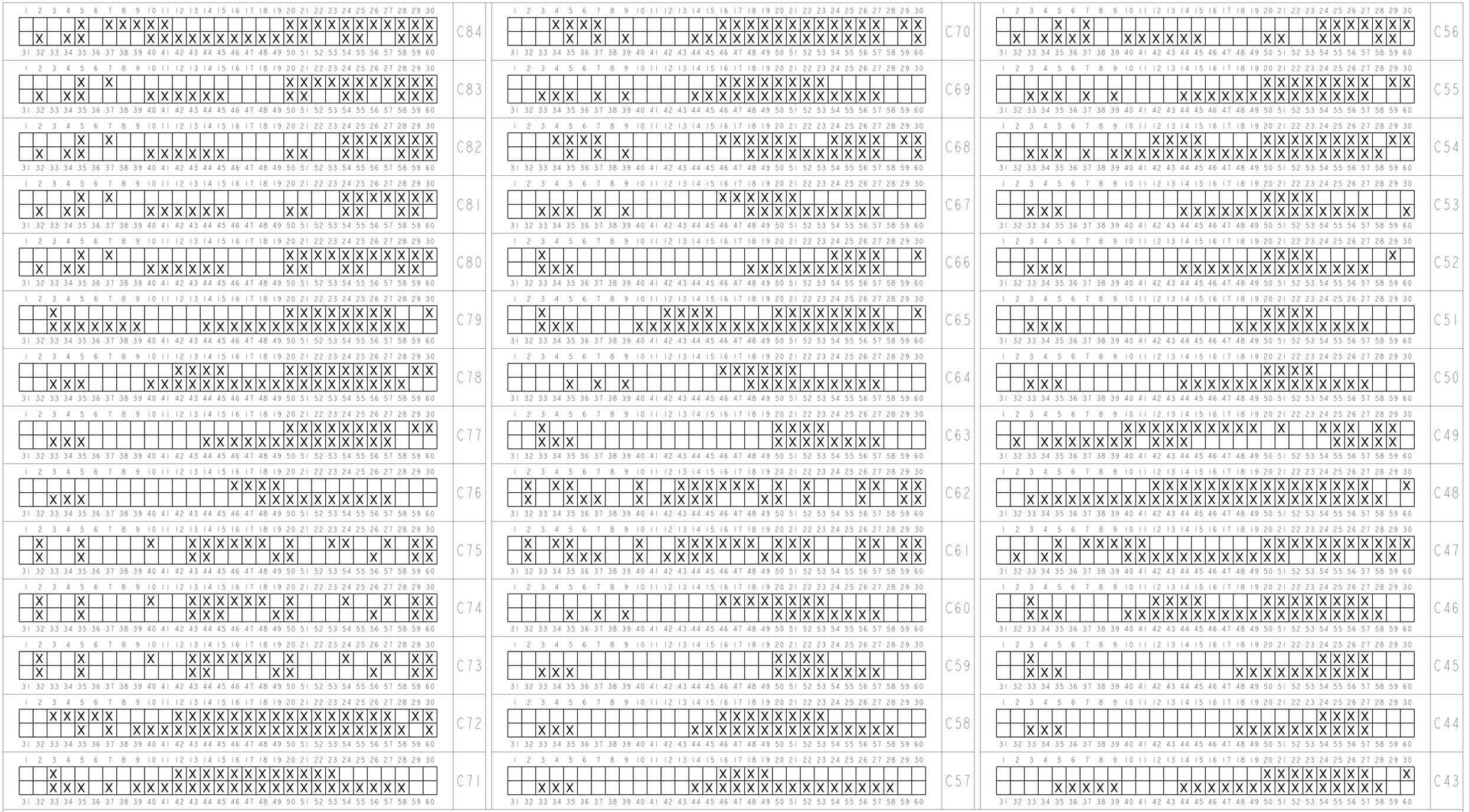

CIRCUIT ARRANGEMENT

X INDICATES UNAVAILABLE (BLOCKED) CIRCUIT

THIS DRAWING IS A CONTROLLED DOCUMENT.

DIMENSIONS: mm

TOLERANCES UNLESS OTHERWISE SPECIFIED:
0 PLC ±-
1 PLC ±0.5
2 PLC ±0.20
3 PLC ±-
4 PLC ±-
ANGLES ±-

MATERIAL - SEE CALLOUT

FINISH - SEE CALLOUT

DWN	J.R.SHUEY	31MAR2000
CHK	V.KANE	31MAR2000
APVD	J.M.MYER	31MAR2000

PRODUCT SPEC -

APPLICATION SPEC 114-13060

WEIGHT -

TE Connectivity

NAME ASSEMBLY, FEMALE, 60 WAY GET SDM CONNECTOR (SHUNTLESS VERSION)

SIZE	CAGE CODE	DRAWING NO	RESTRICTED TO
A1	00779	C-638595	-

CUSTOMER DRAWING

SCALE	SHEET	OF	REV
2:1	8	10	BA4

THIS DRAWING IS UNPUBLISHED. RELEASED FOR PUBLICATION 20
© COPYRIGHT 20 BY - ALL RIGHTS RESERVED.

REVISIONS

P	LTR	DESCRIPTION	DATE	DWN	APVD
	-	SEE SHEET 1	-	-	-

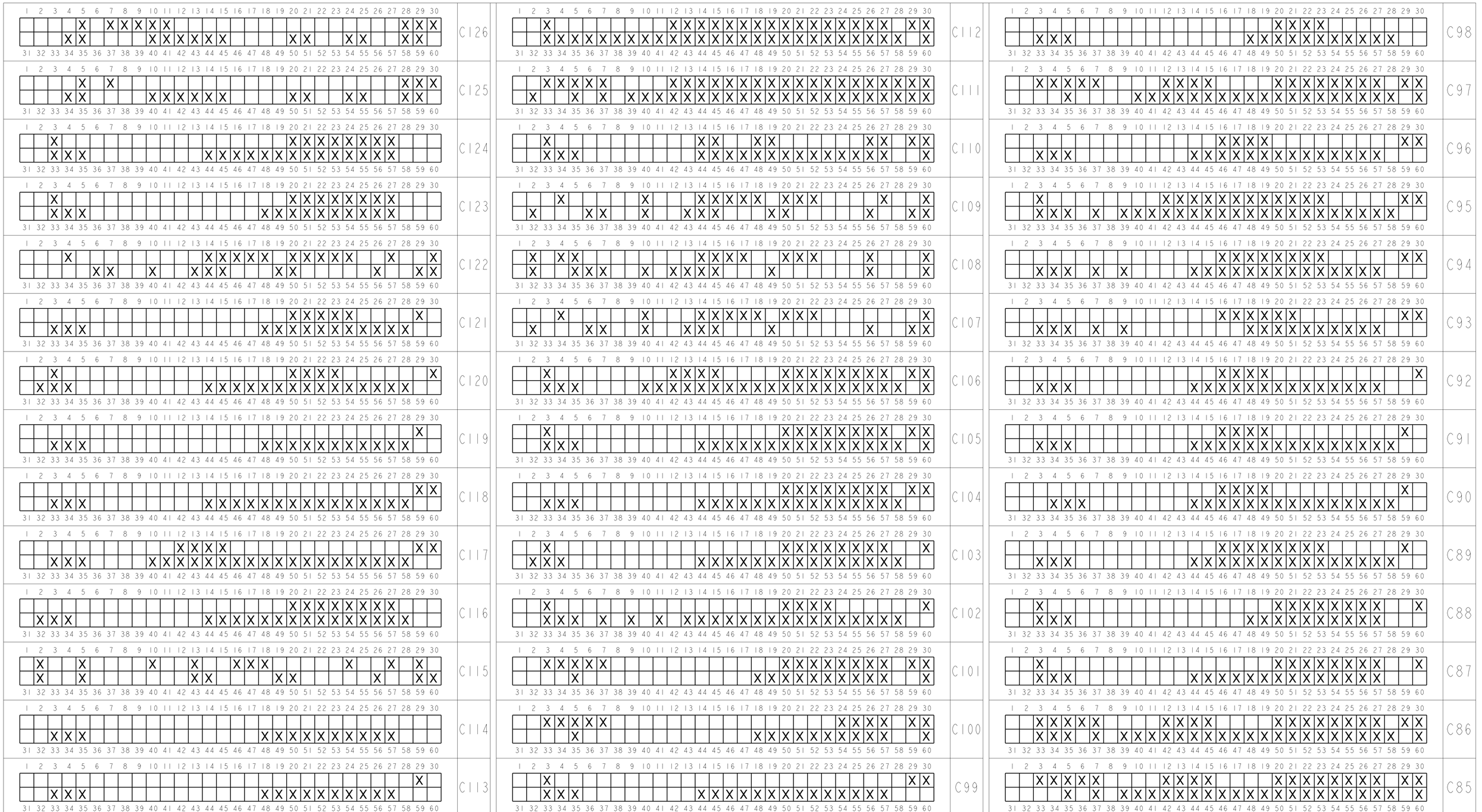

CIRCUIT ARRANGEMENT

X INDICATES UNAVAILABLE (BLOCKED) CIRCUIT

THIS DRAWING IS A CONTROLLED DOCUMENT.

DIMENSIONS: mm

TOLERANCES UNLESS OTHERWISE SPECIFIED:
0 PLC ±-
1 PLC ±0.5
2 PLC ±0.20
3 PLC ±-
4 PLC ±-
ANGLES ±-

MATERIAL - SEE CALLOUT

FINISH - SEE CALLOUT

DWN J.R.SHUEY 31MAR2000
CHK V.KANE 31MAR2000
APVD J.M.MYER 31MAR2000

PRODUCT SPEC -

APPLICATION SPEC 114-13060

WEIGHT -

TE Connectivity

NAME ASSEMBLY, FEMALE, 60 WAY GET SDM CONNECTOR (SHUNTLESS VERSION)

SIZE	CAGE CODE	DRAWING NO	RESTRICTED TO
A1	00779	C-638595	-

CUSTOMER DRAWING

SCALE 2:1 SHEET 9 OF 10 REV BA4

4805 (3/13)

THIS DRAWING IS UNPUBLISHED. RELEASED FOR PUBLICATION 20
© COPYRIGHT 20 BY - ALL RIGHTS RESERVED.

REVISIONS

P	LTR	DESCRIPTION	DATE	DWN	APVD
	-	SEE SHEET 1	-	-	-

	1	2	3	4	5	6	7	8	9	10	11	12	13	14	15	16	17	18	19	20	21	22	23	24	25	26	27	28	29	30
					X		X																					X	X	X
				X	X					X	X	X	X	X	X					X	X			X	X			X	X	
	31	32	33	34	35	36	37	38	39	40	41	42	43	44	45	46	47	48	49	50	51	52	53	54	55	56	57	58	59	60

C134

	1	2	3	4	5	6	7	8	9	10	11	12	13	14	15	16	17	18	19	20	21	22	23	24	25	26	27	28	29	30
					X			X		X	X	X	X	X		X	X	X		X	X	X	X	X	X			X	X	
				X	X	X	X	X		X												X			X	X	X			X
	31	32	33	34	35	36	37	38	39	40	41	42	43	44	45	46	47	48	49	50	51	52	53	54	55	56	57	58	59	60

C132

	1	2	3	4	5	6	7	8	9	10	11	12	13	14	15	16	17	18	19	20	21	22	23	24	25	26	27	28	29	30
					X			X		X		X	X	X		X	X	X		X	X		X	X	X	X	X	X	X	X
		X		X	X	X	X	X		X				X								X			X	X	X	X	X	X
	31	32	33	34	35	36	37	38	39	40	41	42	43	44	45	46	47	48	49	50	51	52	53	54	55	56	57	58	59	60

C131

	1	2	3	4	5	6	7	8	9	10	11	12	13	14	15	16	17	18	19	20	21	22	23	24	25	26	27	28	29	30
			X																	X	X	X	X							
			X	X	X																									
	31	32	33	34	35	36	37	38	39	40	41	42	43	44	45	46	47	48	49	50	51	52	53	54	55	56	57	58	59	60

C130

	1	2	3	4	5	6	7	8	9	10	11	12	13	14	15	16	17	18	19	20	21	22	23	24	25	26	27	28	29	30
										X				X	X	X	X	X		X	X	X					X			X
		X				X	X			X			X	X	X				X	X						X			X	X
	31	32	33	34	35	36	37	38	39	40	41	42	43	44	45	46	47	48	49	50	51	52	53	54	55	56	57	58	59	60

C129

	1	2	3	4	5	6	7	8	9	10	11	12	13	14	15	16	17	18	19	20	21	22	23	24	25	26	27	28	29	30
		X		X	X									X	X	X	X			X	X	X				X				X
		X			X	X	X			X		X	X	X	X				X		X					X				X
	31	32	33	34	35	36	37	38	39	40	41	42	43	44	45	46	47	48	49	50	51	52	53	54	55	56	57	58	59	60

C128

	1	2	3	4	5	6	7	8	9	10	11	12	13	14	15	16	17	18	19	20	21	22	23	24	25	26	27	28	29	30
				X										X	X	X	X	X		X	X	X	X	X	X			X		X
	31	32	33	34	35	36	37	38	39	40	41	42	43	44	45	46	47	48	49	50	51	52	53	54	55	56	57	58	59	60

C127

CIRCUIT ARRANGEMENT

X INDICATES UNAVAILABLE (BLOCKED) CIRCUIT

THIS DRAWING IS A CONTROLLED DOCUMENT.

DIMENSIONS: mm

TOLERANCES UNLESS OTHERWISE SPECIFIED:
0 PLC ±-
1 PLC ±0.5
2 PLC ±0.20
3 PLC ±-
4 PLC ±-
ANGLES ±-

MATERIAL - SEE CALLOUT

FINISH - SEE CALLOUT

DWN J.R.SHUEY 31MAR2000
CHK V.KANE 31MAR2000
APVD J.M.MYER 31MAR2000

PRODUCT SPEC -

APPLICATION SPEC 114-13060

WEIGHT -

TE Connectivity

NAME ASSEMBLY, FEMALE, 60 WAY GET SDM CONNECTOR (SHUNTLESS VERSION)

SIZE A1 | CAGE CODE 00779 | DRAWING NO C-638595 | RESTRICTED TO -

CUSTOMER DRAWING | SCALE 2:1 | SHEET 10 OF 10 | REV BA4

4805 (3/13)

Mouser Electronics

Authorized Distributor

Click to View Pricing, Inventory, Delivery & Lifecycle Information:

TE Connectivity:

5-638595-7