THIS DRAWING IS UNPUBLISHED. RELEASED FOR PUBLICATION -,- .
© COPYRIGHT - BY TYCO ELECTRONICS CORPORATION. ALL RIGHTS RESERVED.

LOC	DIST
AD	25

REVISIONS

P	LTR	DESCRIPTION	DATE	DWN	APVD
	E	REVISED PER EC 0S12-0552-04	15SEP05	JDP	DD
	E1	REVISED PER ECO-09-013609	10JUL09	AEG	DB

1. HOUSING MATERIAL: GLASS-FILLED POLYESTER. COLOR: GRAY.
2. CONTACT MATERIAL: PHOSPHOR BRONZE.
3. PART NUMBER AND DATE CODE HOT STAMPED IN THIS APPROXIMATE AREA.
4. ACTION PIN POSTS REQUIRE 1.57[.062] MINIMUM THICK PC BOARD. RECOMMENDED PC BOARD DRILLED HOLES ARE 1.15±0.025[.0453±.0010] DIAMETER WITH 0.02-0.08[.001-.003] COPPER AND 0.008[.0003] MINIMUM TIN-LEAD PLATING. FINISHED HOLE AFTER PLATING IS 1.02±0.08[.040±.002] DIAMETER.
5. CONTACT FINISH: DIN 41612 CLASS 2 IN CONTACT AREA. TIN-LEAD PLATE ON POSTS.
6. TAIL LENGTH AFTER SEATING IN PC BOARD.
7. CONTACT POINT AFTER SEATED IN PC BOARD.
8. HOT STAMPING ON THIS SIDE.

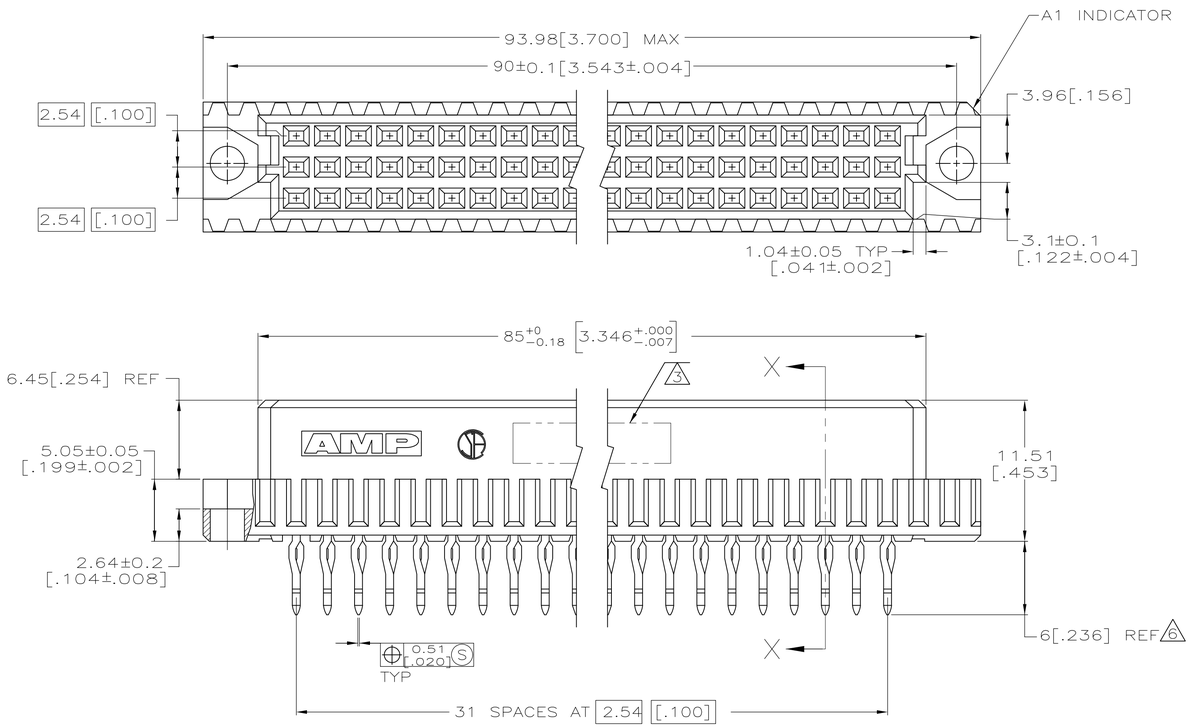

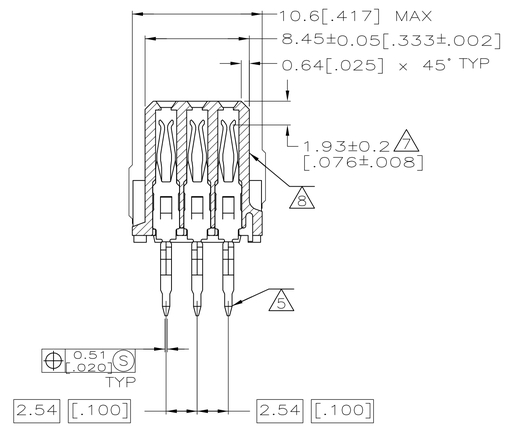

SECTION X-X

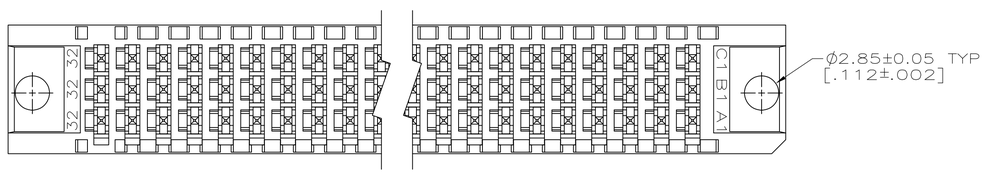

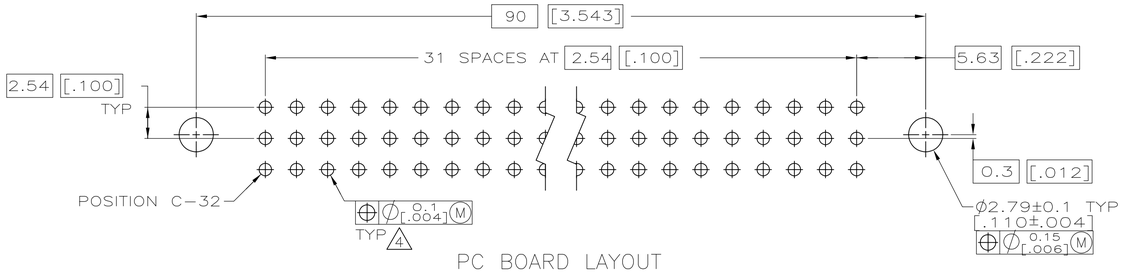

PC BOARD LAYOUT

148120-5
PART NUMBER

THIS DRAWING IS A CONTROLLED DOCUMENT.	DWN L. BRINER 12/15/94	Tyco Electronics	Tyco Electronics Corporation, Harrisburg, Pa 17105-3608
DIMENSIONS: mm [INCHES]	CHK R. PATTERSON 12/20/94		
TOLERANCES UNLESS OTHERWISE SPECIFIED: 0 PLC ± - ; 1 PLC ± - ; 2 PLC ± 0.13[.005] ; 3 PLC ± - ; 4 PLC ± - ; ANGLES ± -	APVD R. PATTERSON 12/20/94	NAME	RECEPTACLE ASSEMBLY, EUROCARD, TYPE C -
	PRODUCT SPEC -		
	APPLICATION SPEC -	SIZE A1 / CAGE CODE 00779 / DRAWING NO C-148120	RESTRICTED TO -
MATERIAL 1 2	FINISH 5	WEIGHT -	
		CUSTOMER DRAWING	SCALE 4:1 / SHEET 1 OF 1 / REV E1

Mouser Electronics

Authorized Distributor

Click to View Pricing, Inventory, Delivery & Lifecycle Information:

TE Connectivity:

148120-5