THIS DRAWING IS UNPUBLISHED. RELEASED FOR PUBLICATION 20
© COPYRIGHT 20 BY - ALL RIGHTS RESERVED.

REVISIONS

P	LTR	DESCRIPTION	DATE	DWN	APVD
	B5	REVISED PER ECR-16-011494	20JUN2017	NK	CX
	B6	ECO-19-006934	13MAY2019	AP	WS

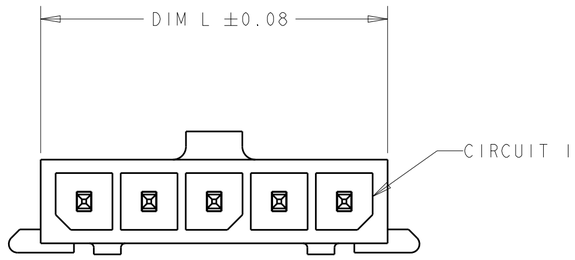

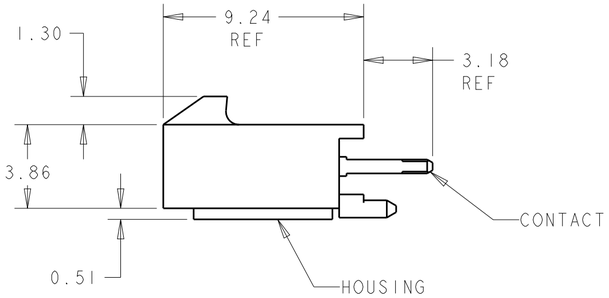

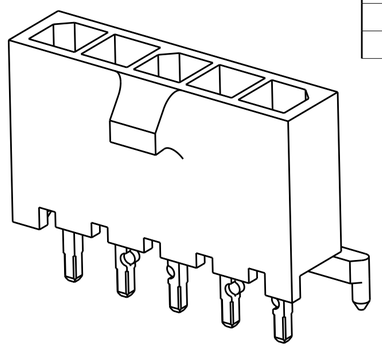

1. MATERIAL: CONTACTS - BRASS
HOUSING - UL 94V-O RATED HIGH TEMP NYLON, COLOR BLACK.

2. PLATING: CONTACTS - 2.54µm MINIMUM TIN-LEAD OVER 1.27µm MINIMUM NICKEL.

4. RECOMMENDED PC BOARD THICKNESS OF 1.57.

5. RETENTION BUMP FEATURES FACE EACH OTHER, TYPICAL ALL CONFIGURATIONS.

6. PLATING: CONTACTS - 2.54µm MINIMUM MATTE TIN OVER 1.27µm MINIMUM NICKEL.

7. SELECTIVE LOADED CONFIGURATION.

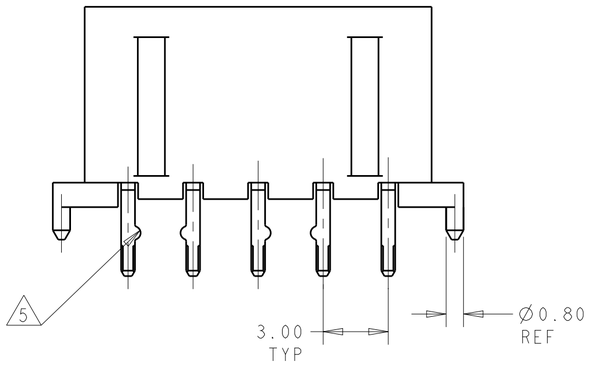

7

1	X	X	4	X	X	7	X	X	10
1,4,7,10						4-1445050-0			
PIN INSERTED						PART NUMBER			

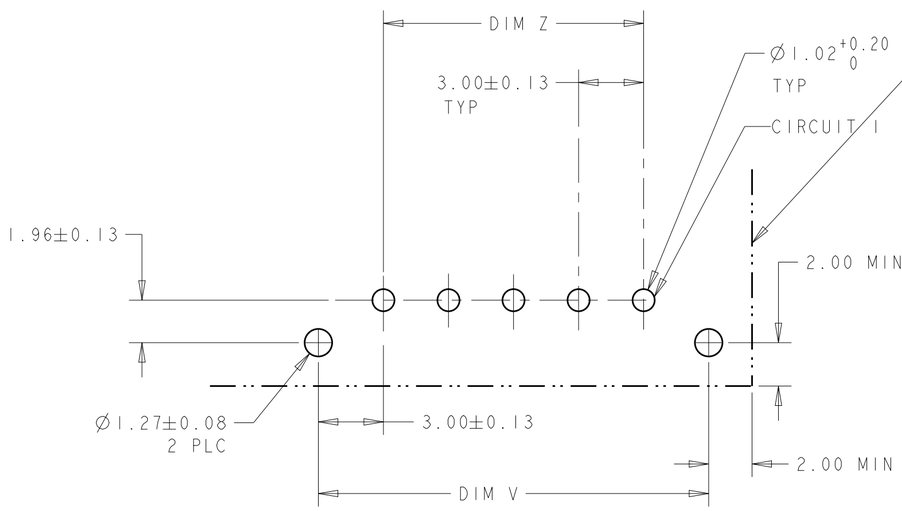

PCB LAYOUT COMPONENT SIDE 4

7	6	1,4,7,10	27.00	33.14	31.00	10	4-1445050-0
	6	1,2,11,12	33.00	39.14	37.00	12	3-1445050-2
	6	1,2,9,10	30.00	36.14	34.00	11	3-1445050-1
	6	1,2,9,10	27.00	33.14	31.00	10	3-1445050-0
	6	1,2,7,8	24.00	30.14	28.00	9	2-1445050-9
	6	1,2,7,8	21.00	27.14	25.00	8	2-1445050-8
	6	1,2,5,6	18.00	24.14	22.00	7	2-1445050-7
	6	1,2,5,6	15.00	21.14	19.00	6	2-1445050-6
	6	1,2,3,4	12.00	18.14	16.00	5	2-1445050-5
	6	1,2,3,4	9.00	15.14	13.00	4	2-1445050-4
	6	1,2	6.00	12.14	10.00	3	2-1445050-3
	6	1,2	3.00	9.14	7.00	2	2-1445050-2
SUPERSEDED BY 3-1445050-2	2	1,2,11,12	33.00	39.14	37.00	12	~~1-1445050-2~~
SUPERSEDED BY 3-1445050-1	2	1,2,9,10	30.00	36.14	34.00	11	~~1-1445050-1~~
SUPERSEDED BY 3-1445050-0	2	1,2,9,10	27.00	33.14	31.00	10	~~1-1445050-0~~
SUPERSEDED BY 2-1445050-9	2	1,2,7,8	24.00	30.14	28.00	9	~~1445050-9~~
SUPERSEDED BY 2-1445050-8	2	1,2,7,8	21.00	27.14	25.00	8	~~1445050-8~~
SUPERSEDED BY 2-1445050-7	2	1,2,5,6	18.00	24.14	22.00	7	~~1445050-7~~
SUPERSEDED BY 2-1445050-6	2	1,2,5,6	15.00	21.14	19.00	6	~~1445050-6~~
SUPERSEDED BY 2-1445050-5	2	1,2,3,4	12.00	18.14	16.00	5	~~1445050-5~~
SUPERSEDED BY 2-1445050-4	2	1,2,3,4	9.00	15.14	13.00	4	~~1445050-4~~
SUPERSEDED BY 2-1445050-3	2	1,2	6.00	12.14	10.00	3	~~1445050-3~~
SUPERSEDED BY 2-1445050-2	2	1,2	3.00	9.14	7.00	2	~~1445050-2~~
	FINISH	CON POS W/RET BUMP 5	DIM Z	DIM V	DIM L	NO. OF POSN	PART NUMBER

1445050

THIS DRAWING IS A CONTROLLED DOCUMENT.

DIMENSIONS: mm

TOLERANCES UNLESS OTHERWISE SPECIFIED:
0 PLC ±-
1 PLC ±-
2 PLC ±0.20
3 PLC ±-
4 PLC ±-
ANGLES ±-

MATERIAL 1

FINISH SEE TABLE

DWN J. ROOT 08OCT2000
CHK K. WHITAKER 19OCT2000
APVD K. WHITAKER 12-MAR-2001
PRODUCT SPEC 108-1836
APPLICATION SPEC 114-13000
WEIGHT -

TE Connectivity

NAME VERTICAL THRU HOLE HEADER ASSY, TIN CONTACTS W/PCB POLARIZATION FEATURE, SINGLE ROW, MICRO MATE-N-LOK TM

SIZE A2 | CAGE CODE 00779 | DRAWING NO C-1445050 | RESTRICTED TO -

CUSTOMER DRAWING | SCALE 5:1 | SHEET 1 OF 1 | REV B6

Mouser Electronics

Authorized Distributor

Click to View Pricing, Inventory, Delivery & Lifecycle Information:

TE Connectivity:

3-1445050-0