THIS DRAWING IS UNPUBLISHED. RELEASED FOR PUBLICATION 20
© COPYRIGHT 20 BY - ALL RIGHTS RESERVED.

REVISIONS

P	LTR	DESCRIPTION	DATE	DWN	APVD
	G45	REVISED PER ECO-13-011449	16JUL2013	DLD	DCM
	G46	REVISED PER ECO-14-007153	19MAY2014	DLD	DCM
	G47	REVISED PER ECO-14-014965	09OCT2013	DLD	DCM
	G48	REVISED PER ECO-20-012739	05OCT2020	AP	CM

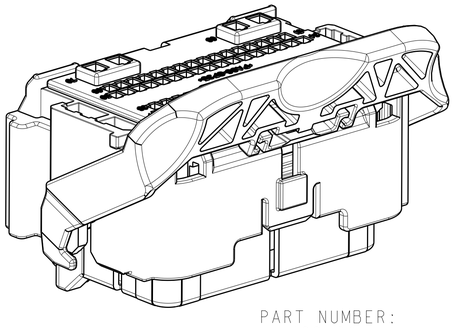

PART NUMBER:
1438136-1
SHOWN WITH SPACER
IN SEATED POSTION

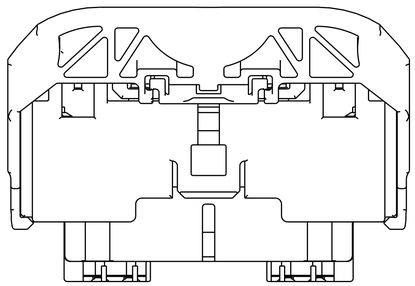

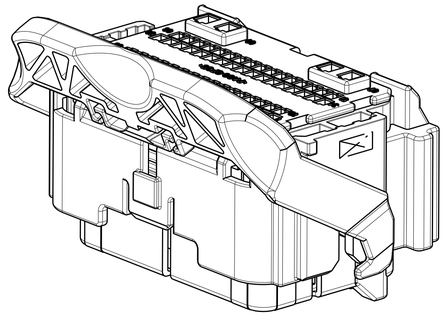

1. PRINT FORD PART NUMBER (SEE ATTACHED CHARTS) AND TRACEBILITY CODE (YY = 2 DIGIT YEAR, JJJ = JULIAN DATE, HH = 2 DIGIT MILITARY HOUR) IN THIS LOCATION AT ASSEMBLY. SEE SHEETS 3, 4 AND 5 (-*) PART NUMBERS.
2. APPLICABLE MOLEX (1.5) POWER TERMINAL PART NUMBERS:
   33012-0002 TIN 0.50-1.50mm^2
3. CAM LEVER AND SPACER ARE SHIPPED IN THEIR PRE-ASSEMBLED POSITIONS.
4. REFERENCE TE INSTRUCTION SHEET 408-8893.

5 COMPANY LOGO.

6 OBSOLETE PART.

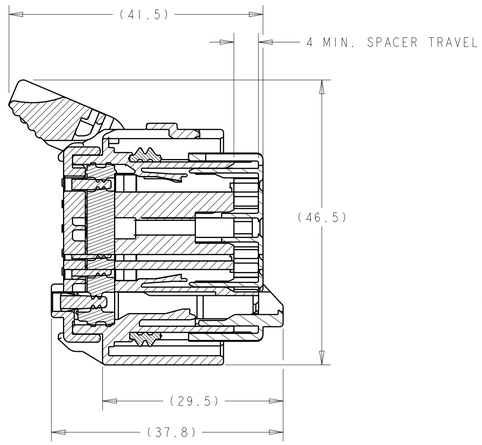

SECTION A-A
SPACER AND LEVER
IN PRE-SEATED POSITION
(DELIVERY POSITION)

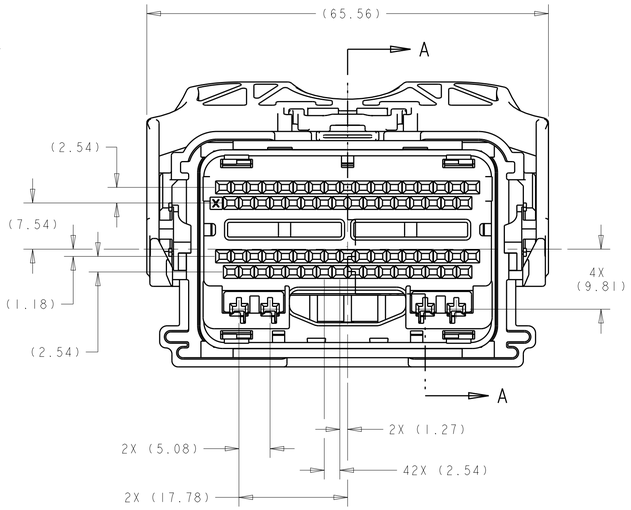

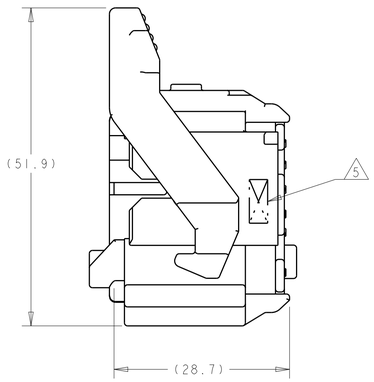

SHOWN WITH CAM
LEVER AND SPACER
IN LOADED POSTION

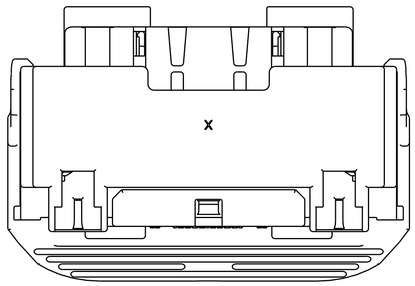

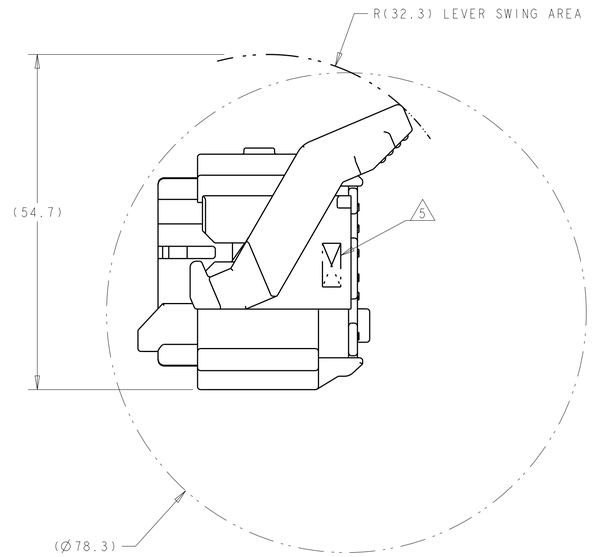

MIN. FEED THRU CONDITION
WITH 1mm CLEARANCE ALL AROUND
SHOWN WITH SPACER IN SEATED POSTION

APPLICABLE COMPONENTS (FOR REFERENCE ONLY)

DESCRIPTION	NOMINAL TERMINAL SIZE	COLOR\ PLATING	FORD COMPONENT PART NUMBER	SUPPLIER PART NUMBER	MATERIAL/SPECIFICATION NUMBER	SAE WIRE SIZE
TERMINAL - FEMALE (Ag)	0.64 (CAT. 0)	SILVER	7S4T-14474-AA	1393366-2	COPPER ALLOY/SILVER PLATE	20AWG
						18AWG
TERMINAL - FEMALE (Ag)	0.64 (CAT. 0)	SILVER	7S4T-14474-BA	1393367-2	COPPER ALLOY/SILVER PLATE	22AWG
TERMINAL - FEMALE (Sn)	0.64 (CAT. 0)	TIN	1L2T-14474-AA	1393366-1	COPPER ALLOY/TIN PLATE	20AWG
						18AWG
TERMINAL - FEMALE (Sn)	0.64 (CAT. 0)	TIN	1L2T-14474-BA	1393367-1	COPPER ALLOY/TIN PLATE	22AWG
TERMINAL - FEMALE (Au)	0.64 (CAT. 0)	GOLD	1L2T-14474-CA	1393365-1	COPPER ALLOY/GOLD PLATE	20AWG
						18AWG
TERMINAL - FEMALE (Au)	0.64 (CAT. 0)	GOLD	1L2T-14474-DA	1393364-1	COPPER ALLOY/GOLD PLATE	22AWG

SEE SHEETS 3 THRU 7
PART NUMBER

THIS DRAWING IS A CONTROLLED DOCUMENT.

DIMENSIONS: mm

TOLERANCES UNLESS OTHERWISE SPECIFIED:
0 PLC ±-
1 PLC ±0.3
2 PLC ±0.10
3 PLC ±-
4 PLC ±-
ANGLES ±1°

MATERIAL -
FINISH -

DWN R. VESTAL 15APR2005
CHK T. VALASEK 15APR2005
APVD T. VALASEK 15APR2005

PRODUCT SPEC -
APPLICATION SPEC -
WEIGHT -

TE Connectivity

NAME 70-WAY HARNESS ASSEMBLY

SIZE	CAGE CODE	DRAWING NO	RESTRICTED TO
A1	00779	C-1438136	-

CUSTOMER DRAWING SCALE 2:1 SHEET 1 OF 11 REV 648

THIS DRAWING IS UNPUBLISHED. RELEASED FOR PUBLICATION 20
© COPYRIGHT 20 BY - ALL RIGHTS RESERVED.

REVISIONS

P	LTR	DESCRIPTION	DATE	DWN	APVD
	-	SEE SHEET 1	-	-	-

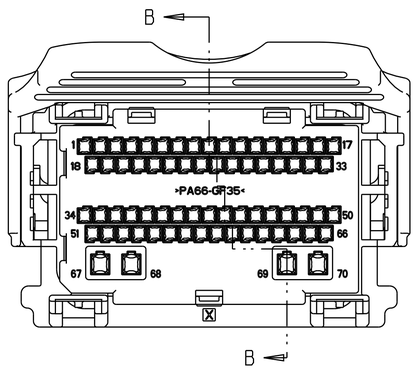

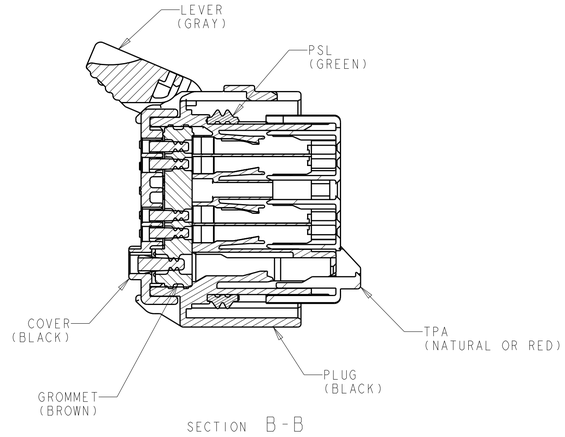

SECTION B-B

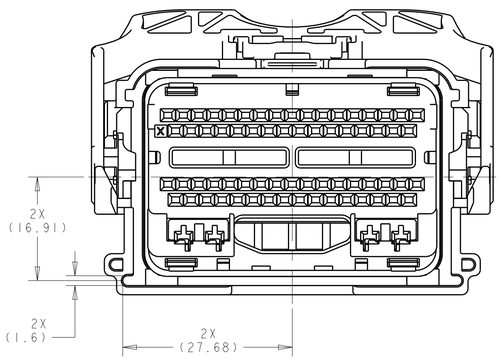

KEYING OPTION "A"

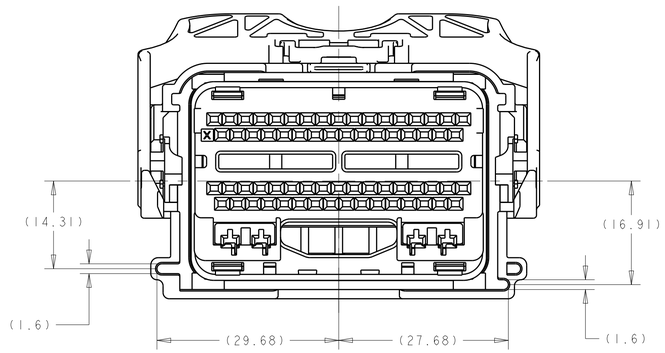

KEYING OPTION "B"

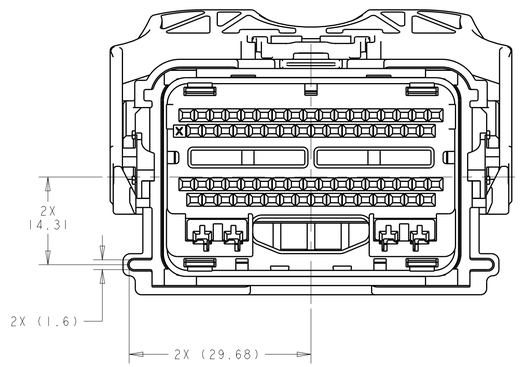

KEYING OPTION "C"

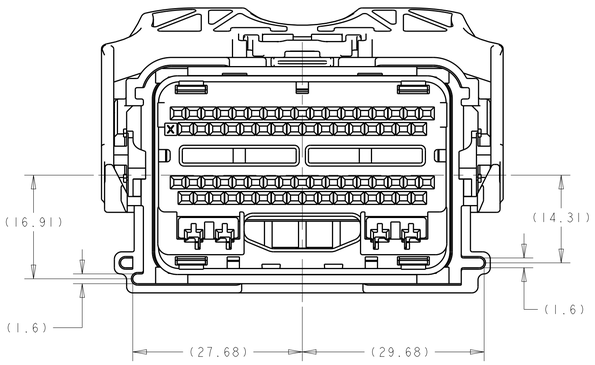

KEYING OPTION "D"

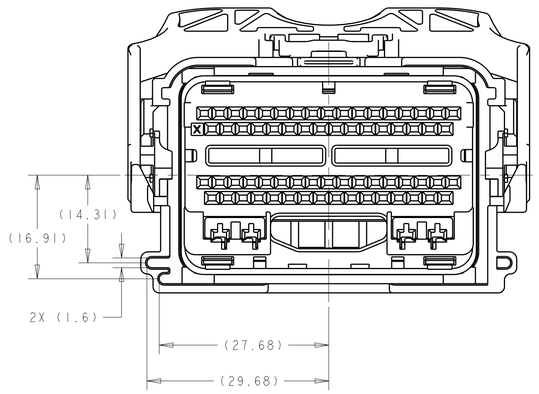

KEYING OPTION "E"

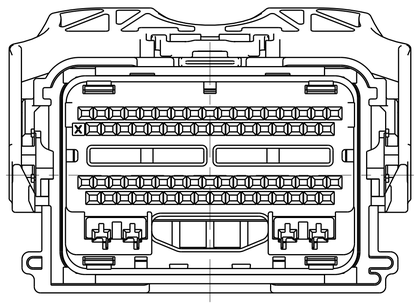

KEYING OPTION "F"

THIS DRAWING IS A CONTROLLED DOCUMENT.

DIMENSIONS: mm

TOLERANCES UNLESS OTHERWISE SPECIFIED:
0 PLC ±-
1 PLC ±0.3
2 PLC ±0.10
3 PLC ±-
4 PLC ±-
ANGLES ±1°

MATERIAL - -

FINISH - -

DWN	R. VESTAL	15APR2005
CHK	T. VALASEK	15APR2005
APVD	T. VALASEK	15APR2005

PRODUCT SPEC -

APPLICATION SPEC -

WEIGHT -

TE Connectivity

NAME 70-WAY HARNESS ASSEMBLY

SIZE	CAGE CODE	DRAWING NO	RESTRICTED TO
A1	00779	C-1438136	-

CUSTOMER DRAWING

SCALE	SHEET	OF	REV
2:1	2	11	G48

4805 (3/13)

THIS DRAWING IS UNPUBLISHED. RELEASED FOR PUBLICATION 20
© COPYRIGHT 20 BY - ALL RIGHTS RESERVED.

REVISIONS

P	LTR	DESCRIPTION	DATE	DWN	APVD
	-	SEE SHEET 1	-	-	-

KEYING OPTION A

TERMINAL HOLE POSITION	70	69	68	67	66	65	64	63	62	61	60	59	58	57	56	55	54	53	52	51	50	49	48	47	46	45	44	43	42	41	40	39	38	37	36	35	34	33	32	31	30	29	28	27	26	25	24	23	22	21	20	19	18	17	16	15	14	13	12	11	10	9	8	7	6	5	4	3	2	1	ASSEMBLY PART NUMBER	FORD PART NUMBER
					65	64	63	62						56														42		40	39						33	32					27	26	25	24	23	22	21	20	19	18					13					8	7	6				2	1	9-1438136-6	5L3T-14A464-DA-054
					65	64	63	62						56													43	42		40	39						33									24			21	20		18					13					8					3	2	1	8-1438136-8	5L3T-14A464-DA-053
					65	64	63	62						56							49	48					43	42		40	39						33		31	30			27				23		21			18					13					8			5	4	3	2	1	8-1438136-3	5L3T-14A464-DA-052
					65									56						50	49	48				44	43	42		40	39						33		31	30						24				20								13					8					3	2	1	8-1438136-2	5L3T-14A464-DA-051
						64	63	62					57	56	55					50							43				39	38						32					27	26	25			22									14	13				9	8					3			8-1438136-1	5L3T-14A464-DA-050
						64	63	62					57	56	55					50							43				39	38						32			29	28	27	26	25			22									14	13				9	8					3			7-1438136-8	5L3T-14A464-DA-049
					65	64	63	62					57	56													42		40	39						33	32						26	25	24	23	22	21	20	19	18					13					8	7	6				2	1	~~7-1438136-7~~ (6)	~~5L3T-14A464-DA-048~~
					65	64	63	62						56							49	48					43	42		40	39						33		31	30							23		21			18					13					8			5	4	3	2	1	7-1438136-5	5L3T-14A464-DA-047
					65									56						50						44	43	42		40	39						33									24				20								13					8					3	2	1	7-1438136-4	5L3T-14A464-DA-046
					65	64	63	62						56													43	42		40	39						33						27			24			21	20		18					13					8					3	2	1	7-1438136-3	5L3T-14A464-DA-045
			68	67		65	64							56	55					50						44	43	42	41	40	39	38					33		31	30			27			24				20					15	14	13		11	10	9	8							2	1	7-1438136-2	5L3T-14A464-DA-044
	70		68	67	66	65	64	63			60	59				55	54			51	50						44	43	42		40		38	37			34		32	31	30	29		27			24	23		21	20	19	18		16	15	14			11	10	9				5	4	3	2	1	7-1438136-1	5L3T-14A464-DA-043
						64	63	62					57	56	55					50							43	42			39	38						32					27		25			22	21	20	19	18				14					9	8	7		5				1	6-1438136-9	5L3T-14A464-DA-042
			68	67		65	64							56						50						44	43	42		40	39						33		31	30			27			24	23			20		18					13					8				4		2	1	6-1438136-8	5L3T-14A464-DA-041
			68	67			64	63	62						56						50						44	43	42		40	39						33		31	30			27			24	23		21	20		18					13					8	7	6						6-1438136-7	5L3T-14A464-DA-040
			68	67			64	63	62												50	49	48				44	43	42		40							33		31	30			27			24	23		21	20		18											7	6		4	3			~~6-1438136-6~~ (6)	~~5L3T-14A464-DA-039~~
			68	67	66	65	64		62		60	59			56	55				51	50						44	43	42	41	40	39	38				34		32	31	30			27			24	23			20	19					15	14	13		11	10	9	8	7		5	4	3	2	1	~~6-1438136-5~~ (6)	~~5L3T-14A464-DA-038~~
			68	67	66	65	64		62		60	59			56	55				51	50						44	43	42	41	40	39	38				34		32	31	30			27			24	23			20	19					15	14	13		11	10	9	8	7		5	4		2	1	6-1438136-4	5L3T-14A464-DA-037
	70		68	67	66	65	64	63			60	59				55	54			51	50						44	43	42		40		38	37			34		32	31	30	29		27			24	23		21	20	19			16	15	14			11	10	9				5	4	3	2	1	~~6-1438136-3~~ (6)	~~5L3T-14A464-DA-036~~
						64	63	62					57	56	55					50							43				39	38						32					27	26	25			22	21	20	19	18				14	13				9	8	7	6	5	4	3			6-1438136-2	5L3T-14A464-DA-035
						64	63	62					57	56	55					50							43				39	38						32					27	26	25		23	22	21	20	19	18				14	13				9	8	7	6	5	4				~~6-1438136-0~~ (6)	~~5L3T-14A464-DA-034~~
			68	67		65	64							56	55											44		42		40	39	38					33		31	30			27			24	23			20		18			15	14	13		11	10	9	8	7		5	4		2	1	5-1438136-9	5L3T-14A464-DA-033
			68	67																	50						44	43	42		40							33						27			24				20		18											7						2		~~5-1438136-8~~ (6)	~~5L3T-14A464-DA-032~~
			68	67				63	62												50						44	43	42		40							33						27			24			21	20		18											7						2		5-1438136-7	5L3T-14A464-DA-031
						64	63	62						56														42		40	39						33									24	23		21	20		18					13					8	7							5-1438136-6	5L3T-14A464-DA-030
			68	67	66	65	64				60	59				55				51	50						44	43	42		40		38				34		32	31	30			27			24	23			20	19					15	14			11	10	9				5	4		2	1	5-1438136-5	5L3T-14A464-DA-029
			68	67			64							56						50						44	43	42		40	39						33		31	30			27			24	23			20		18					13					8	7	6						4-1438136-9	5L3T-14A464-DA-028
	70		68					63							56	55	54									44		42		40	39	38	37				33	32	31	30	29		27		25	24		22	21		19				15	14				10					5	4		2	1	4-1438136-3	5L3T-14A464-DA-027
	70		68					63							56	55	54									44		42		40	39	38	37				33	32	31	30	29		27			24		22	21		19				15	14				10						4		2	1	4-1438136-2	5L3T-14A464-DA-026
						64	63							56	55					50							43	42	41	40	39	38						32	31	30			27		25			22	21	20	19						14									5				1	4-1438136-1	5L3T-14A464-DA-025
			68	67			64							56						50						44	43	42		40	39						33		31	30			27	26	25		23	22		20	19	18					13					8	7	6	5	4	3	2	1	4-1438136-0	5L3T-14A464-DA-024
			68	67			64	63	62						56						50						44	43	42		40	39						33		31	30			27			24	23		21	20		18					13					8	7	6				2		3-1438136-9	5L3T-14A464-DA-023
			68	67			64	63	62												50	49	48				44	43	42		40							33		31	30			27			24	23		21	20		18											7	6						3-1438136-8	5L3T-14A464-DA-022
			68	67			64		62						56						50						44	43	42		40	39						33		31	30			27			24	23			20		18					13					8	7	6				2		3-1438136-7	5L3T-14A464-DA-021
			68	67			64							56						50						44	43	42		40	39						33		31	30			27			24	23			20	19	18					13					8	7	6						3-1438136-6	5L3T-14A464-DA-020
					65	64	63	62						56													43	42		40	39						33										23		21			18					13					8			5	4	3	2	1	~~3-1438136-5~~ (6)	~~5L3T-14A464-DA-019~~
			68	67		65	64							56	55					50						44	43	42	41	40	39	38					33		31	30			27				23									15	14	13		11	10	9	8			5	4		2	1	3-1438136-4	5L3T-14A464-DA-018
			68	67			64	63	62												50	49	48				44	43	42		40							33		31	30			27			24	23		21	20		18											7	6		4	3	2		~~3-1438136-3~~ (6)	~~5L3T-14A464-DA-017~~
			68	67			64	63	62						56						50						44	43	42		40	39						33		31	30			27			24	23		21	20		18					13					8	7	6		4	3	2		~~3-1438136-2~~ (6)	~~5L3T-14A464-DA-016~~
			68	67				63	62												50						44	43	42		40							33						27			24	23		21	20		18											7	6				2		3-1438136-1	5L3T-14A464-DA-015
						64	63	62						56														42		40	39						33									24	23		21	20		18					13					8	7	6						3-1438136-0	5L3T-14A464-DA-014
						64	63	62						56														42		40	39						33								26	25		23	22	21	20		18					13					8	7	6	5	4	3	2	1	2-1438136-7	5L3T-14A464-DA-013
			68	67			64							56	55											44		42		40	39	38					33		31	30			27	26	25	24	23	22		20		18			15	14	13		11	10	9	8	7	6	5	4		2	1	2-1438136-6	5L3T-14A464-DA-012
						64	63	62						56														42		40	39						33									24	23		21	20		18																2	1	2-1438136-4	5L3T-14A464-DA-011
			68	67			64							56	55					50						44	43	42	41	40	39	38					33		31	30			27			24	23			20					15	14			11	10	9							2	1	2-1438136-3	5L3T-14A464-DA-010
						64	63	62						56														42		40	39						33								26	25	24	23	22	21	20		18					13					8	7	6	5	4	3	2	1	2-1438136-2	5L3T-14A464-DA-009
			68	67										56						50						44	43	42		40	39						33		31	30			27	26	25		23	22		20	19	18					13					8	7	6	5	4	3	2	1	~~1-1438136-6~~ (6)	~~5L3T-14A464-DA-008~~
			68	67			64						58		56	55					50						44	43	42	41	40	39	38							31	30			27							20					15	14			11	10	9							2	1	1-1438136-5	5L3T-14A464-DA-007
						64	63	62				58	57	56														42		40	39															24			21	20		18																2	1	1-1438136-4	5L3T-14A464-DA-006
			68	67			64						58	57	56	55					50						44	43	42	41	40	39	38							31	30			27							20					15	14			11	10	9							2	1	1-1438136-3	5L3T-14A464-DA-005
			68	67										56						50						44	43	42		40	39						33		31	30			27	26	25		23	22			19	18					13					8	7	6	5	4	3	2	1	~~1-1438136-0~~ (6)	~~5L3T-14A464-DA-004~~
CAVITIES WITH A NUMERIC SYMBOL INDICATES CLOSED TERMINAL LOCATIONS							64	63	62						56														42		40	39						33								26	25		23	22	21	20	19	18					13					8	7	6	5	4	3	2	1	~~1438136-9~~ (6)	~~5L3T-14A464-DA-003~~
							64	63	62						56														42		40	39								31	30				26	25			22	21		19	18					13					8	7	6	5	4	3	2	1	1438136-8	5L3T-14A464-DA-002
BLANK CAVITIES INDICATES OPEN TERMINAL HOLE LOCATIONS			68	67										56						50						44	43	42		40	39								31	30			27	26	25			22			19	18					13					8	7	6	5	4	3	2	1	~~1438136-7~~ (6)	~~5L3T-14A464-DA-001~~
																																																																							1438136-1	5L3T-14A464-DA-000

5L3T-14A464-D* PIN-OUT CHART

THIS DRAWING IS A CONTROLLED DOCUMENT.

DIMENSIONS: mm

TOLERANCES UNLESS OTHERWISE SPECIFIED:
0 PLC ±-
1 PLC ±0.3
2 PLC ±0.10
3 PLC ±-
4 PLC ±-
ANGLES ±1°

MATERIAL - -
FINISH - -

DWN R. VESTAL 15APR2005
CHK T. VALASEK 15APR2005
APVD T. VALASEK 15APR2005
PRODUCT SPEC -
APPLICATION SPEC -
WEIGHT -

TE Connectivity

NAME: 70-WAY HARNESS ASSEMBLY

SIZE A1 | CAGE CODE 00779 | DRAWING NO C-1438136 | RESTRICTED TO -

CUSTOMER DRAWING | SCALE 2:1 | SHEET 3 OF 11 | REV G48

4805 (3/13)

THIS DRAWING IS UNPUBLISHED.	RELEASED FOR PUBLICATION 20
© COPYRIGHT 20 BY -	ALL RIGHTS RESERVED.

REVISIONS					
P	LTR	DESCRIPTION	DATE	DWN	APVD
	-	SEE SHEET 1	-	-	-

KEYING OPTION A

	70	69	68	67		65		63	62	61	60	59			56					51	50	49	48	47	46	45	44	43	42		40				36		34	33		31	30	29	28	27	26	25	24	23	22	21	20		18	17	16	15	14	13	12	11	10	9	8	7	6	5					9-2035383-9	5L3T-14A464-DA-080
		69			66	65	64	63	62	61	60	59	58	57	56	55	54	53	52																		34	33	32	31	30			27	26	25	24				20			17	16				12				8				4	3			9-2035383-5	5L3T-14A464-DA-079
	70	69			66	65	64	63	62	61	60	59	58		56	55	54	53		51	50	49	48		46	45	44	43	42	41	40	39	38	37	36	35	34	33	32	31	30	29	28	27	26	25	24	23	22		20	19	18	17	16	15			12	11	10	9		7	6	5	4	3	2	1	9-2035383-3	5L3T-14A464-DA-078
						65																									40		38		36	35				31	30								22	21	20			17	16	15	14		12	11		9	8	7	6						1-2035383-4	5L3T-14A464-DA-077
							64	63	62						56						50							43	42		40	39						33						27						21	20		18					13					8		6				2		1-2035383-0	5L3T-14A464-DA-076
			68	67		65	64								56						50						44	43	42		40	39						33		31	30			27			24	23			20		18					13					8				4	3	2	1	2035383-8	5L3T-14A464-DA-075
			68	67			64	63	62					57							50	49	48				44	43	42		40							33	32	31	30			27			24			21	20	19	18																2		2035383-2	5L3T-14A464-DA-074
			68	67			64	63			60			57			54	53	52		50	49	48		46	45		43	42		40		38	37	36	35	34	33	32	31	30	29	28	27	26	25	24	23	22	21	20	19				15	14	13	12		10	9	8		6	5	4	3		1	7-1456659-1	5L3T-14A464-DA-073
						65	64	63	62						56													43	42		40	39						33						27				23		21			18					13					8			5	4		2	1	5-1456659-9	5L3T-14A464-DA-072
							64	63	62					57	56	55					50							43	42			39	38						32					27		25			22	21	20	19	18				14					9	8	7	6	5			2	1	5-1456659-8	5L3T-14A464-DA-071
			68	67				63	62												50						44	43	42		40							33						27						21	20		18												6				2		5-1456659-7	5L3T-14A464-DA-070
							~~64~~	~~63~~	~~62~~						~~56~~						~~50~~							~~43~~	~~42~~		~~40~~	~~39~~						~~33~~						~~27~~						~~21~~	~~20~~		~~18~~					~~13~~					~~8~~		~~6~~						~~5-1456659-6~~ 6	~~5L3T-14A464-DA-069~~
						65	64	63	62					57	56	55					50							43				39	38					33	32					27	26	25			22								14	13				9	8					3			5-1456659-4	5L3T-14A464-DA-068
						65	64	63	62					57	56	55					50							43				39	38					33	32					27	26	25			22	21	20	19	18				14	13				9	8	7	6	5	4	3			4-1456659-9	5L3T-14A464-DA-067
						65	64	63	62					57	56	55					50							43				39	38					33	32			29	28	27	26	25			22								14	13				9	8					3			4-1456659-8	5L3T-14A464-DA-066
						65													52				48	47							40		38		36	35			32	31	30	29							22	21	20		18	17	16	15	14	13	12	11		9	8	7	6						4-1456659-7	5L3T-14A464-DA-065
			68	67			64	63	62					57							50	49	48				44	43	42		40							33	32	31	30			27			24			21	20	19	18																		3-1456659-8	5L3T-14A464-DA-064
			68	67					62	61								53	52			49						43						37	36				32		30	29	28						22				18		16		14	13			10	9	8								3-1456659-4	5L3T-14A464-DA-063
						65												53	52				48	47	46	45	44						38	37						31	30	29	28	27	26	25	24	23	22	21	20		18					13			10			7	6						3-1456659-1	5L3T-14A464-DA-062
			68	67		65	64								56						50						44	43	42		40	39						33		31	30			27				23			20		18					13					8	7		5			2	1	2-1456659-9	5L3T-14A464-DA-061
							64	63	62						56														42		40	39						33						27			24			21	20		18					13					8	7							2-1456659-0	5L3T-14A464-DA-060
			~~68~~	~~67~~		~~65~~		~~63~~	~~62~~												~~50~~						~~44~~	~~43~~	~~42~~		~~40~~							~~33~~						~~27~~	~~26~~	~~25~~	~~24~~	~~23~~	~~22~~	~~21~~	~~20~~		~~18~~											~~7~~	~~6~~		~~4~~	~~3~~	~~2~~	~~1~~	~~1-1456659-9~~ 6	~~5L3T-14A464-DA-059~~
CAVITIES WITH A NUMERIC SYMBOL INDICATES CLOSED TERMINAL LOCATIONS			~~68~~	~~67~~			~~64~~	~~63~~	~~62~~												~~50~~						~~44~~	~~43~~	~~42~~		~~40~~							~~33~~						~~27~~			~~24~~			~~21~~	~~20~~		~~18~~											~~7~~					~~2~~		~~1-1456659-8~~ 6	~~5L3T-14A464-DA-058~~
			68	67																	50						44	43	42		40							33	32					27			24	23			20	19	18																		1456659-3	5L3T-14A464-DA-057
BLANK CAVITIES INDICATES OPEN TERMINAL HOLE LOCATIONS						65	64								56						50						44	43	42		40	39						33		31	30			27				23			20		18					13					8	7		5			2	1	9-1438136-9	5L3T-14A464-DA-056
						65	64	63	62						56														42		40	39						33						27				23		21	20		18					13					8	7				3	2	1	9-1438136-8	5L3T-14A464-DA-055
TERMINAL HOLE POSITION	70	69	68	67	66	65	64	63	62	61	60	59	58	57	56	55	54	53	52	51	50	49	48	47	46	45	44	43	42	41	40	39	38	37	36	35	34	33	32	31	30	29	28	27	26	25	24	23	22	21	20	19	18	17	16	15	14	13	12	11	10	9	8	7	6	5	4	3	2	1	ASSEMBLY PART NUMBER	FORD PART NUMBER

5L3T-14A464-D* PIN-OUT CHART

THIS DRAWING IS A CONTROLLED DOCUMENT.

DIMENSIONS: mm	TOLERANCES UNLESS OTHERWISE SPECIFIED: 0 PLC ±- 1 PLC ±0.3 2 PLC ±0.10 3 PLC ±- 4 PLC ±- ANGLES ±1°
MATERIAL - -	FINISH - -

DWN	R. VESTAL	15APR2005
CHK	T. VALASEK	15APR2005
APVD	T. VALASEK	15APR2005
PRODUCT SPEC	-	
APPLICATION SPEC	-	
WEIGHT	-	

TE Connectivity

NAME: 70-WAY HARNESS ASSEMBLY

SIZE	CAGE CODE	DRAWING NO	RESTRICTED TO
A1	00779	C-1438136	-

CUSTOMER DRAWING | SCALE 2:1 | SHEET 4 OF 11 | REV G48

4805 (3/13)

THIS DRAWING IS UNPUBLISHED. RELEASED FOR PUBLICATION 20
© COPYRIGHT 20 BY - ALL RIGHTS RESERVED.

REVISIONS

P	LTR	DESCRIPTION	DATE	DWN	APVD
	-	SEE SHEET 1	-	-	-

KEYING OPTION B

TERMINAL HOLE POSITION	70	69	68	67	66	65	64	63	62	61	60	59	58	57	56	55	54	53	52	51	50	49	48	47	46	45	44	43	42	41	40	39	38	37	36	35	34	33	32	31	30	29	28	27	26	25	24	23	22	21	20	19	18	17	16	15	14	13	12	11	10	9	8	7	6	5	4	3	2	1	ASSEMBLY PART NUMBER	FORD PART NUMBER
								63			60											49				45					40	39	38		36				32	31								24				20	19		17		15	14	13	12	11	10				6	5	4			1	2035383-4	5L3T-14A464-EA-047
								63			60											49				45					40	39	38		36				32	31								24				20	19		17	16	15	14	13	12	11	10				6	5	4			1	2035383-3	5L3T-14A464-EA-046
		69	68		66	65	64					59			55	54	53	52	51	50	49	48	47									39	38	37		35	34	33	32	31	30										21	20	19	18				14										5				1	7-1456659-0	5L3T-14A464-EA-045
70																					50	49	48								40	39	38		36				32	31								24	23	22		20	19			16	15	14	13	12	11		9		7	6	5			1	5-1456659-0 6	5L3T-14A464-EA-044
								63			60											49				45					40	39	38		36				32	31								24				20	19			16	15	14	13	12	11	10				6	5	4			1	4-1456659-6 6	5L3T-14A464-EA-043
								63			60											49				45					40	39	38		36				32	31								24				20	19			16	15		12	11	10				6	5	4			1	4-1456659-0 6	5L3T-14A464-EA-042
							64				60											49							42	41								32	31																16	15	14	13	12			9	8		6	5	4			1	3-1456659-0 6	5L3T-14A464-EA-041
70						65												53			50	49	48								40	39	38		36				32	31								24	23	22		20		18	17		15	14	13	12	11		9		7	6	5			1	2-1456659-4	5L3T-14A464-EA-040
70																					50	49	48								40	39	38		36				32	31								24	23	22		20				16	15	14	13	12	11		9		7	6	5			1	2-1456659-3 6	5L3T-14A464-EA-039
70						65																49	48								40	39	38		36				32	31								24	23	22		20		18	17		15	14	13	12	11		9		7	6	5				2-1456659-2	5L3T-14A464-EA-038
70						65															50	49	48								40	39	38		36				32	31								24	23	22		20		18	17		15	14	13	12	11		9		7	6	5			1	2-1456659-1	5L3T-14A464-EA-037
																						49							42	41		39	38				32	31																16	15	14	13	12		9	8		6	5	4			1	1-1456659-7	5L3T-14A464-EA-036
											60											49				45					40	39	38		36				32	31								24				20	19				15	14	13	12	11	10				6	5	4			1	1-1456659-6	5L3T-14A464-EA-035
																						49							42	41																															9	8		6	5	4			1	1-1456659-5	5L3T-14A464-EA-034
							64				60											49							42	41		39	38																											9	8		6	5	4			1	1-1456659-4	5L3T-14A464-EA-033
																						49							42	41								32	31																16	15	14	13	12		9	8		6	5	4			1	1-1456659-3 6	5L3T-14A464-EA-032
70						65												53				49	48								40	39	38		36		33		32	31								24	23	22		20	19	18	17		15	14	13	12	11		9		7	6	5			1	1-1456659-1	5L3T-14A464-EA-031
							64				60											49												37	36	35			32	31															16	15	14	13	12		9			6	5	4			1	1456659-7	5L3T-14A464-EA-030
								63			60											49				45					40	39	38		36				32	31								24				20	19				15	14	13	12	11	10				6	5	4			1	1456659-2	5L3T-14A464-EA-029
																						49						43	42	41																															9	8	7	6	5	4			1	8-1438136-7 6	5L3T-14A464-EA-028
							64				60											49						43	42	41		39	38																											9	8	7	6	5	4			1	8-1438136-6	5L3T-14A464-EA-027
																						49						43	42	41								32	31																16	15	14	13	12		9	8	7	6	5	4			1	8-1438136-5	5L3T-14A464-EA-026
								63			60											49				45					40	39	38		36	35			32	31								24				20	19				15	14	13	12	11	10				6	5	4			1	8-1438136-9 6	5L3T-14A464-EA-025
																										45					40	39	38		36	35			32	31								24				20	19				15	14	13	12	11	10						4			1	7-1438136-9	5L3T-14A464-EA-024
							64				60											49												37	36	35			32	31								24							17	16	15	14	13	12			9			6	5	4			1	7-1438136-6	5L3T-14A464-EA-023
70						65												53			50	49	48								40	39	38		36				32	31								24	23	22		20	19	18	17		15	14	13	12	11		9		7	6	5			1	7-1438136-0 6	5L3T-14A464-EA-022
											60											49				45					40	39	38		36	35			32	31								24				20	19				15	14	13	12	11	10				6	5	4			1	6-1438136-1	5L3T-14A464-EA-021
						65	64				60										50	49	48									39	38																		20				16	15	14	13	12	11	10	9	8	7	6	5	4			1	5-1438136-4 6	5L3T-14A464-EA-020
						65															50	49	48																												20							11	10	9	8	7	6	5	4			1	5-1438136-3	5L3T-14A464-EA-019
						65	64				60										50	49	48									39	38																		20							11	10	9	8	7	6	5	4			1	5-1438136-2	5L3T-14A464-EA-018
						65															50	49	48																32	31												20				16	15	14	13	12	11	10	9	8	7	6	5	4			1	5-1438136-1	5L3T-14A464-EA-017
70																					50	49	48								40	39	38		36				32	31								24	23	22		20	19			16	15	14	13	12	11	10	9		7	6	5			1	5-1438136-0 6	5L3T-14A464-EA-016
70						65															50	49	48								40	39	38		36				32	31								24	23	22		20	19	18	17		15	14	13	12	11	10	9		7	6	5			1	4-1438136-8	5L3T-14A464-EA-015
70						65															50	49	48								40	39	38		36				32	31								24	23	22		20	19	18	17		15	14	13	12	11		9		7	6	5			1	4-1438136-7	5L3T-14A464-EA-014
70						65																49	48								40	39	38		36				32	31								24	23	22		20	19	18	17		15	14	13	12	11	10	9		7	6	5				4-1438136-6	5L3T-14A464-EA-013
						65	64				60										50	49	48																32	31												20				16	15	14	13	12	11	10	9	8	7	6	5	4			1	4-1438136-5 6	5L3T-14A464-EA-012
						65	64				60										50	49	48									39	38							32	31												20				16	15	14	13	12	11	10	9	8	7	6	5	4			1	4-1438136-4 6	5L3T-14A464-EA-011
						65	64				60										50	49	48								40						33	32	31												20			17	16	15	14	13	12	11	10	9	8	7	6	5	4			1	2-1438136-0 6	5L3T-14A464-EA-010
						65	64				60										50	49	48								40						33														20			17				11	10	9	8	7	6	5	4			1	2-1438136-8 6	5L3T-14A464-EA-009
						65	64				60										50	49	48								40	39	38				33	32	31												20			17	16	15	14	13	12	11	10	9	8	7	6	5	4			1	2-1438136-5	5L3T-14A464-EA-008
						65	64				60										50	49	48								40	39	38				33														20			17				11	10	9	8	7	6	5	4			1	2-1438136-1	5L3T-14A464-EA-007
						65	64				60										50	49	48								40	39	38				33	32	31												20			17	16	15	14	13	12	11	10	9	8	7	6	5	4			1	2-1438136-0	5L3T-14A464-EA-006
						65	64				60										50	49	48			45					40	39	38				33	32	31												20			17	16	15	14	13	12	11	10	9	8	7	6	5	4			1	1-1438136-9 6	5L3T-14A464-EA-005
						65	64				60										50	49	48			45					40	39	38				33														20			17				11	10	9	8	7	6	5	4			1	1-1438136-8	5L3T-14A464-EA-004
CAVITIES WITH A NUMERIC SYMBOL INDICATES CLOSED TERMINAL LOCATIONS						65	64				60										50	49	48								40	39	38				33														20			17				11	10	9	8	7	6	5	4			1	1-1438136-7 6	5L3T-14A464-EA-003
						65	64				60										50	49	48								40	39	38				33																	17				11	10	9	8	7	6	5				1-1438136-2 6	5L3T-14A464-EA-002
BLANK CAVITIES INDICATES OPEN TERMINAL HOLE LOCATIONS						65	64				60										50	49	48								40	39	38				33																	17				11	10	9	8	7	6	5	4			1	1-1438136-1	5L3T-14A464-EA-001
																																																																											1438136-2 6	5L3T-14A464-EA-000

5L3T-14A464-E* PIN-OUT CHART

THIS DRAWING IS A CONTROLLED DOCUMENT.

DIMENSIONS: mm

TOLERANCES UNLESS OTHERWISE SPECIFIED:
0 PLC ±-
1 PLC ±0.3
2 PLC ±0.10
3 PLC ±-
4 PLC ±-
ANGLES ±1°

MATERIAL - -

FINISH - -

DWN R. VESTAL 15APR2005
CHK T. VALASEK 15APR2005
APVD T. VALASEK 15APR2005

PRODUCT SPEC -

APPLICATION SPEC -

WEIGHT -

TE Connectivity

NAME 70-WAY HARNESS ASSEMBLY

SIZE	CAGE CODE	DRAWING NO	RESTRICTED TO
A1	00779	C-1438136	-

CUSTOMER DRAWING

SCALE 2:1 SHEET 5 OF 11 REV G48

4805 (3/13)

THIS DRAWING IS UNPUBLISHED. RELEASED FOR PUBLICATION 20
© COPYRIGHT 20 BY - ALL RIGHTS RESERVED.

REVISIONS					
P	LTR	DESCRIPTION	DATE	DWN	APVD
	-	SEE SHEET 1	-	-	-

KEYING OPTION C

	70				66	65					60	59			56			53	52				48	47	46	45	44						38	37						31	30	29	28			25	24		22	21	20	19	18						12		10	9	8	7	6	5					9-2035383-8	8U5T-14A464-AA-042
	70	69	68	67		65	64	63	62	61	60	59			56					51	50	49	48	47	46	45	44	43	42	41	40				36		34	33		31	30	29	28	27	26	25	24	23	22	21	20		18	17	16	15	14	13	12	11	10	9	8	7	6	5	4		2	1	9-2035383-1	8U5T-14A464-AA-041
	70				66	65					60	59			56			53	52				48	47	46	45	44						38							31	30	29	28			25	24		22	21	20	19	18						12		10	9	8	7	6	5					8-2035383-3	8U5T-14A464-AA-040
	70		68		66	65					60	59			56			53					48	47	46	45	44						38							31	30	29	28			25	24		22	21	20	19							12		10	9	8	7	6	5					6-2035383-5	8U5T-14A464-AA-039
						65																									40		38		36	35				31	30	29								21	20			17	16	15	14		12	11		9	8	7	6						6-2035383-0	8U5T-14A464-AA-038
						65																									40		38		36	35				31	30	29								21	20			17	16				12	11		9	8	7	6						5-2035383-8	8U5T-14A464-AA-037
						65																									40		38		36	35					30								22	21	20			17	16	15	14		12	11		9	8	7	6						5-2035383-3	8U5T-14A464-AA-036
						65																									40		38		36	35				31	30	29							22	21	20			17	16	15	14		12	11		9	8	7	6						4-2035383-3	8U5T-14A464-AA-035
						65																									40		38		36	35				31	30	29							22	21	20			17	16	15	14		12	11		9	8		6						3-2035383-9	8U5T-14A464-AA-034
						65																									40		38		36	35				31	30								22	21	20			17	16	15	14		12	11		9	8	7	6						2-2035383-3	8U5T-14A464-AA-033
						65																									40		38		36	35				31	30								22	21	20			17	16	15	14		12	11		9	8		6						2-2035383-1	8U5T-14A464-AA-032
								63										53	52			49	48								40			37	36				32		30	29							22	21			18		16		14	13			10	9	8	7							2-2035383-0	8U5T-14A464-AA-031
						65																									40		38		36	35				31	30								22	21	20			17	16	15	14		12	11		9	8	7							1-2035383-7	8U5T-14A464-AA-030
											60	59	58	57				53	52								44								36								28				24											13		11			8	7							1-2035383-5	8U5T-14A464-AA-029
	70		68		66	65					60	59			56			53	52				48	47	46	45	44						38							31	30	29	28			25	24		22	21	20	19	18					13	12		10	9		7	6	5					1-2035383-1	8U5T-14A464-AA-028
								63										53	52			49	48								40			37	36				32		30	29							22	21			18		16		14	13			10	9	8	7	6						2035383-6	8U5T-14A464-AA-027
								63										53	52			49	48								40			37	36				32		30	29								21			18		16		14	13			10	9	8	7	6						2035383-5	8U5T-14A464-AA-026
			68	67					62	61								53	52			49						43						37	36				32		30	29	28						22				18		16		14	13			10	9	8	7	6						9-1456659-9	8U5T-14A464-AA-025
			68			65			62	61						55		53				49	48					43		41		39				35		33	32		30	29	28	27		25	24			21	20		18	17	16		14	13	12		10	9		7	6	5					8-1456659-6	8U5T-14A464-AA-024
						65													52				48	47	46	45	44						38							31	30	29	28						22	21	20		18					13				9	8	7							8-1456659-5	8U5T-14A464-AA-023
						65													52				48	47							40		38		36	35				31	30	29							22	21	20		18	17	16	15	14	13	12	11		9	8	7	6						7-1456659-3	8U5T-14A464-AA-022
						65													52				48	47							40		38		36	35				31	30	29							22	21	20		18	17	16	15	14	13	12	11		9	8								6-1456659-4	8U5T-14A464-AA-021
						65												53	52				48	47	46	45	44						38	37						31	30	29	28	27	26	25	24	23	22	21	20		18					13			10			7							5-1456659-5	8U5T-14A464-AA-020
			68	67				63	62	61								53	52			49	48					43			40			37	36				32		30	29	28						22	21			18		16		14	13			10	9	8	7	6						5-1456659-3	8U5T-14A464-AA-019
						~~65~~												~~53~~	~~52~~				~~48~~	~~47~~	~~46~~	~~45~~	~~44~~						~~38~~	~~37~~						~~31~~	~~30~~	~~29~~	~~28~~	~~27~~	~~26~~	~~25~~	~~24~~	~~23~~	~~22~~	~~21~~	~~20~~		~~18~~					~~13~~			~~10~~			~~7~~	~~6~~						~~4-1456659-5~~ △6	~~8U5T-14A464-AA-018~~
			68			65			62	61						55		53				49	48					43		41		39				35		33	32		30	29	28	27		25	24		22	21	20		18	17	16		14	13	12		10	9		7	6	5					4-1456659-4	8U5T-14A464-AA-017
	70		68		66	65					60	59			56			53	52				48	47	46	45	44						38	37						31	30	29	28	27	26	25	24	23	22	21	20	19	18					13	12		10	9		7	6	5					4-1456659-3	8U5T-14A464-AA-016
	70		68		66	65					60	59			56			53	52				48	47	46	45	44						38							31	30	29	28			25	24		22	21	20	19	18					13	12		10	9	8	7	6	5					4-1456659-2	8U5T-14A464-AA-015
			68	67				63	62	61								53	52			49	48					43			40	39	38	37	36				32		30	29	28		26	25	24	23	22	21			18		16		14	13			10	9	8	7							3-1456659-9	8U5T-14A464-AA-014
			~~68~~	~~67~~					~~62~~	~~61~~								~~53~~	~~52~~			~~49~~						~~43~~				~~39~~	~~38~~	~~37~~	~~36~~				~~32~~		~~30~~	~~29~~	~~28~~		~~26~~	~~25~~	~~24~~	~~23~~	~~22~~				~~18~~		~~16~~		~~14~~	~~13~~			~~10~~	~~9~~	~~8~~								~~3-1456659-7~~ △6	~~8U5T-14A464-AA-013~~
			68	67					62	61								53	52			49						43						37	36				32		30	29	28						22				18		16		14	13			10	9	8								3-1456659-6	8U5T-14A464-AA-012
								63										53	52			49	48								40			37	36				32		30	29								21			18		16		14	13			10	9	8		6						3-1456659-5	8U5T-14A464-AA-011
								63										53	52			49	48								40			37	36						30	29								21			18		16		14	13			10	9	8		6						3-1456659-3	8U5T-14A464-AA-010
								63										53	52			49	48								40			37	36				32		30	29							22	21			18		16		14	13			10	9	8		6						3-1456659-2	8U5T-14A464-AA-009
			68	67		65			62	61						55		53				49	48					43		41		39	38			35		33	32	31	30	29	28	27	26	25	24	23	22	21	20		18	17	16		14	13	12		10	9		7	6	5					1-1456659-0	8U5T-14A464-AA-008
			68	67		65			62	61						55		53				49	48					43		41		39	38			35		33	32	31	30	29	28	27	26		24	23		21	20		18	17	16		14	13	12		10	9		7	6	5					1456659-9	8U5T-14A464-AA-007
			68	67		65			62	61						55		53				49	48					43		41		39	38			35		33	32	31	30	29	28	27	26	25	24	23	22	21	20	19	18	17	16		14	13	12		10	9		7	6	5					1456659-6	8U5T-14A464-AA-006
							64	63														49	48								40			37	36						30	29								21			18		16		14	13			10	9	8		6						1456659-5	8U5T-14A464-AA-005
								63														49	48								40			37	36						30	29								21			18		16		14	13			10	9	8		6						1456659-4	8U5T-14A464-AA-004
CAVITIES WITH A NUMERIC SYMBOL INDICATES CLOSED TERMINAL LOCATIONS			68	67		65			62	61						55		53				49	48					43		41		39	38			35		33	32	31	30	29	28	27	26		24	23		21	20	19	18	17	16		14	13	12		10	9		7	6	5					9-1438136-7	8U5T-14A464-AA-003
			68		66	65			62	61					56	55		53				49	48					43		41		39	38			35		33	32	31	30	29	28	27	26	25	24	23		21	20	19	18	17			14	13	12		10	9				5					9-1438136-4	8U5T-14A464-AA-002
BLANK CAVITIES INDICATES OPEN TERMINAL HOLE LOCATIONS	70	69						63														49	48								40			37	36						30	29								21			18		16		14	13			10	9	8		6						9-1438136-3	8U5T-14A464-AA-001
																																																																							1438136-3	8U5T-14A464-AA-000
TERMINAL HOLE POSITION	70	69	68	67	66	65	64	63	62	61	60	59	58	57	56	55	54	53	52	51	50	49	48	47	46	45	44	43	42	41	40	39	38	37	36	35	34	33	32	31	30	29	28	27	26	25	24	23	22	21	20	19	18	17	16	15	14	13	12	11	10	9	8	7	6	5	4	3	2	1	ASSEMBLY PART NUMBER	FORD PART NUMBER

8U5T-14A464-A* PIN-OUT CHART

THIS DRAWING IS A CONTROLLED DOCUMENT.

DWN R. VESTAL 15APR2005
CHK T. VALASEK 15APR2005
APVD T. VALASEK 15APR2005

TE Connectivity

DIMENSIONS: mm

TOLERANCES UNLESS OTHERWISE SPECIFIED:
0 PLC ±-
1 PLC ±0.3
2 PLC ±0.10
3 PLC ±-
4 PLC ±-
ANGLES ±1°

MATERIAL - -
FINISH - -
PRODUCT SPEC -
APPLICATION SPEC -
WEIGHT -

NAME: 70-WAY HARNESS ASSEMBLY

SIZE A1 | CAGE CODE 00779 | DRAWING NO C-1438136 | RESTRICTED TO -

CUSTOMER DRAWING | SCALE 2:1 | SHEET 6 OF 11 | REV G48

THIS DRAWING IS UNPUBLISHED. RELEASED FOR PUBLICATION 20
© COPYRIGHT 20 BY - ALL RIGHTS RESERVED.

REVISIONS

P	LTR	DESCRIPTION	DATE	DWN	APVD
	-	SEE SHEET 1	-	-	-

KEYING OPTION D

TERMINAL HOLE POSITION	ASSEMBLY PART NUMBER	FORD PART NUMBER
57 55 51 49 43 36 35 33 30 27 25 24 23 22 18 17 15 11 10 9 8 6 3 2 1	3-2035383-0	8U5T-14A464-BA-056
56 55 54 52 51 49 39 36 35 34 33 31 27 26 25 24 23 22 18 17 15 12 9 4 1	2-2035383-9	8U5T-14A464-BA-055
55 54 51 49 41 36 35 34 33 30 27 26 24 23 22 18 17 15 11 9 8 6 4 3 2 1	2-2035383-7	8U5T-14A464-BA-054
64 63 55 54 51 49 48 41 36 33 30 27 26 25 24 23 18 15 9 4	2-2035383-5	8U5T-14A464-BA-053
57 56 55 54 51 49 39 36 35 33 27 26 25 24 23 22 17 15 12 10 9 8 5 4 1	2-2035383-4	8U5T-14A464-BA-052
57 56 55 54 51 49 39 36 35 33 27 26 25 24 23 22 17 15 12 11 10 9 8 6 5 4 3 1	1-2035383-9	8U5T-14A464-BA-051
64 63 55 54 51 49 48 41 36 33 30 27 26 25 18 15 9 4	1-2035383-8	8U5T-14A464-BA-050
57 55 54 49 43 41 39 35 33 30 26 24 23 22 17 15 11 10 9 8 6 5 4 3 2 1	1-2035383-3	8U5T-14A464-BA-049
57 55 54 51 49 43 41 39 36 35 33 30 27 26 25 24 23 22 17 15 11 10 9 8 6 5 4 3 2 1	1-2035383-2	8U5T-14A464-BA-048
57 55 54 49 41 40 39 33 30 27 26 25 18 17 15 11 10 9 8 6 5 3 2 1	2035383-9	8U5T-14A464-BA-047
64 63 55 54 51 49 48 41 36 33 30 27 26 25 18 15 9 4 2	2035383-7	8U5T-14A464-BA-046
57 56 55 54 51 49 39 36 35 33 27 26 25 24 23 22 17 12 11 10 9 8 6 5 4 3 1	2035383-1	8U5T-14A464-BA-045
55 54 49 39 33 30 27 26 25 18 17 15 11 10 9 8 6 5 3 2 1	9-1456659-8	8U5T-14A464-BA-044
56 55 54 52 51 49 39 36 35 34 33 31 27 26 25 24 23 18 17 15 12 11 10 9 8 6 5 4 3 1	9-1456659-6	8U5T-14A464-BA-043
57 55 54 53 51 49 37 33 32 30 27 26 25 24 23 22 19 17 16 15 12 9 7 3 2 1	9-1456659-3	8U5T-14A464-BA-042
57 55 54 53 52 51 49 37 33 32 31 30 27 25 24 23 22 19 17 16 15 12 9 7 3 1	9-1456659-1	8U5T-14A464-BA-041
57 55 54 51 49 43 39 36 35 33 30 27 26 25 22 18 17 15 11 10 9 8 6 4 3 2 1	8-1456659-9	8U5T-14A464-BA-040
57 55 54 51 49 43 39 36 35 33 27 26 25 24 23 22 18 17 15 11 10 9 8 6 4 3 2 1	8-1456659-8	8U5T-14A464-BA-039
57 55 54 53 51 49 37 35 34 33 32 30 27 26 25 24 23 22 19 18 17 16 15 12 9 8 7 3 2 1	8-1456659-7	8U5T-14A464-BA-038
57 55 54 51 49 43 39 36 35 33 30 27 26 25 24 23 22 18 17 15 11 10 9 8 6 4 3 2 1	8-1456659-4	8U5T-14A464-BA-037
57 55 54 49 39 33 30 27 26 25 24 23 18 17 15 11 10 9 8 6 5 3 2 1	8-1456659-3	8U5T-14A464-BA-036
57 55 54 49 39 33 30 27 26 25 18 17 15 11 10 9 8 6 5 3 2 1	8-1456659-2	8U5T-14A464-BA-035
57 55 54 49 41 40 39 33 30 26 25 18 17 15 11 10 9 8 6 5 3 2 1	8-1456659-1	8U5T-14A464-BA-034
56 55 54 51 49 39 36 35 34 33 31 26 25 24 23 18 17 15 12 9 4 1	8-1456659-0	8U5T-14A464-BA-033
56 55 54 52 51 49 39 36 35 34 33 31 27 26 25 24 23 18 17 15 12 9 4 1	7-1456659-9	8U5T-14A464-BA-032
56 55 54 52 51 49 39 36 35 34 33 31 27 26 25 24 23 18 17 15 12 11 10 9 8 6 4 3 1	7-1456659-8	8U5T-14A464-BA-031
57 56 55 54 51 49 39 36 35 33 27 26 25 24 23 22 18 17 11 10 9 8 6 5 4 3 7-1456659-7		8U5T-14A464-BA-030
57 55 54 51 49 43 39 36 35 33 27 26 25 24 23 22 17 15 11 10 9 8 6 5 4 3 2 1	7-1456659-6	8U5T-14A464-BA-029
57 55 54 51 49 43 39 36 35 33 30 27 26 25 24 23 22 17 15 11 10 9 8 6 5 4 3 2 1	7-1456659-5	8U5T-14A464-BA-028
~~57 55 54 51 43 39 36 35 33 27 26 25 24 23 22 18 17 15 11 10 9 8 6 5 4 3 2 1~~	~~7-1456659-4~~ 6	~~8U5T-14A464-BA-027~~
57 55 54 53 51 49 37 33 32 30 27 26 25 24 23 22 19 17 16 15 12 9 7 2 1	7-1456659-2	8U5T-14A464-BA-026
57 55 54 53 51 49 37 33 32 30 27 26 25 24 23 22 19 17 16 15 12 9 7 5 1	6-1456659-9	8U5T-14A464-BA-025
57 56 54 51 49 39 36 35 33 27 26 25 24 23 22 17 15 12 11 10 9 8 6 5 4 3 1	6-1456659-8	8U5T-14A464-BA-024
57 55 51 49 43 39 36 35 33 30 27 26 25 24 23 22 17 11 10 9 8 6 5 3 2 1	6-1456659-7	8U5T-14A464-BA-023
~~57 56 55 54 51 49 39 36 35 33 27 26 25 24 23 22 17 12 11 10 9 8 6 5 3 1~~	~~6-1456659-6~~ 6	~~8U5T-14A464-BA-022~~
~~57 55 54 51 43 39 36 35 33 27 26 25 24 23 22 18 17 15 11 10 9 8 6 5 3 2 1~~	~~6-1456659-5~~ 6	~~8U5T-14A464-BA-021~~
56 55 54 51 49 39 36 35 34 33 31 26 25 24 23 18 17 15 12 9 1	6-1456659-3	8U5T-14A464-BA-020
~~57 55 54 53 52 51 49 37 33 32 31 30 27 25 24 23 22 19 17 16 15 12 9 7 1~~	~~6-1456659-2~~ 6	~~8U5T-14A464-BA-019~~
~~56 55 54 52 51 49 39 36 35 34 33 31 27 26 25 24 23 18 17 15 12 9 1~~	~~6-1456659-1~~ 6	~~8U5T-14A464-BA-018~~
~~56 55 54 51 49 39 36 35 34 33 31 26 25 24 23 18 17 15 12 9 1~~	~~6-1456659-0~~ 6	~~8U5T-14A464-BA-017~~
57 55 54 51 49 43 39 36 35 33 30 27 26 25 24 23 22 17 15 11 10 9 8 6 5 3 2 1	5-1456659-2	8U5T-14A464-BA-016
~~57 55 54 51 49 43 39 36 35 33 27 26 25 24 23 22 17 15 11 10 9 8 6 5 3 2 1~~	~~5-1456659-1~~ 6	~~8U5T-14A464-BA-015~~
57 55 54 53 52 51 49 37 33 32 31 30 27 25 24 23 22 19 17 16 15 12 9 7 5 1	4-1456659-1	8U5T-14A464-BA-014
~~57 56 54 52 51 49 39 36 35 33 31 30 27 26 25 24 23 22 17 15 12 11 10 9 8 6 4 3 2 1~~	~~2-1456659-8~~ 6	~~8U5T-14A464-BA-013~~
57 56 54 51 49 39 36 35 33 30 27 26 25 24 23 22 17 15 12 11 10 9 8 6 4 3 1	2-1456659-7	8U5T-14A464-BA-012
~~57 55 54 53 51 49 37 33 32 30 27 26 25 24 23 22 19 17 16 15 12 9 7 5 1~~	~~2-1456659-6~~ 6	~~8U5T-14A464-BA-011~~
~~57 55 54 51 49 43 39 36 35 33 30 27 26 25 24 23 22 17 15 11 9 8 6 5 3 2 1~~	~~2-1456659-5~~ 6	~~8U5T-14A464-BA-010~~
57 55 54 53 51 49 37 36 35 33 32 30 27 26 25 24 23 22 19 18 17 16 15 12 9 8 7 3 2 1-1456659-2		8U5T-14A464-BA-009
~~57 56 55 54 51 49 39 36 35 33 27 26 25 24 23 22 18 17 11 10 9 8 6 5 3 1456659-8~~ 6		~~8U5T-14A464-BA-008~~
~~57 56 55 54 51 49 39 36 35 33 30 27 26 25 24 23 22 18 17 11 10 9 8 6 5 3 1456659-1~~ 6		~~8U5T-14A464-BA-007~~
~~59 57 56 55 54 51 49 43 39 36 35 33 27 26 25 24 22 18 17 10 9 8 6 5 3 1 9-1438136-5~~ 6		~~8U5T-14A464-BA-006~~
~~57 56 54 51 49 39 36 35 33 30 27 26 25 24 23 22 17 15 12 11 10 9 8 7 6 4 3 1 9-1438136-2~~ 6		~~8U5T-14A464-BA-005~~
~~57 56 54 52 51 49 39 36 35 33 31 30 27 26 25 24 23 22 17 15 12 11 10 9 8 7 6 4 3 2 1 9-1438136-1~~ 6		~~8U5T-14A464-BA-004~~
CAVITIES WITH A NUMERIC SYMBOL INDICATES CLOSED TERMINAL LOCATIONS: 57 56 54 51 49 39 36 35 33 30 27 26 25 24 23 22 17 15 12 11 10 9 8 7 6 5 3 1	9-1438136-0	8U5T-14A464-BA-003
57 56 54 52 51 49 39 36 35 33 31 30 27 26 25 24 23 22 17 15 12 11 10 9 8 7 6 5 3 2 1	8-1438136-9	8U5T-14A464-BA-002
BLANK CAVITIES INDICATES OPEN TERMINAL HOLE LOCATIONS: 57 56 54 53 51 49 39 37 36 35 34 33 30 27 26 25 24 23 22 18 17 16 15 14 12 11 10 9 8 7 6 4 3 1	8-1438136-4	8U5T-14A464-BA-001
	1438136-4	8U5T-14A464-BA-000
TERMINAL HOLE POSITION: 70 69 68 67 66 65 64 63 62 61 60 59 58 57 56 55 54 53 52 51 50 49 48 47 46 45 44 43 42 41 40 39 38 37 36 35 34 33 32 31 30 29 28 27 26 25 24 23 22 21 20 19 18 17 16 15 14 13 12 11 10 9 8 7 6 5 4 3 2 1		

8U5T-14A464-B* PIN-OUT CHART

THIS DRAWING IS A CONTROLLED DOCUMENT.

DIMENSIONS: mm

TOLERANCES UNLESS OTHERWISE SPECIFIED:
0 PLC ±-
1 PLC ±0.3
2 PLC ±0.10
3 PLC ±-
4 PLC ±-
ANGLES ±1°

MATERIAL - -
FINISH - -

DWN R. VESTAL 15APR2005
CHK T. VALASEK 15APR2005
APVD T. VALASEK 15APR2005
PRODUCT SPEC -
APPLICATION SPEC -
WEIGHT -

TE Connectivity

NAME 70-WAY HARNESS ASSEMBLY

SIZE	CAGE CODE	DRAWING NO	RESTRICTED TO
A1	00779	C-1438136	-

CUSTOMER DRAWING | SCALE 2:1 | SHEET 7 OF 11 | REV G48

4805 (3/13)

THIS DRAWING IS UNPUBLISHED. RELEASED FOR PUBLICATION 20
© COPYRIGHT 20 BY - ALL RIGHTS RESERVED.

REVISIONS

P	LTR	DESCRIPTION	DATE	DWN	APVD
	-	SEE SHEET 1	-	-	-

KEYING OPTION D

TERMINAL HOLE POSITION	70	69	68	67	66	65	64	63	62	61	60	59	58	57	56	55	54	53	52	51	50	49	48	47	46	45	44	43	42	41	40	39	38	37	36	35	34	33	32	31	30	29	28	27	26	25	24	23	22	21	20	19	18	17	16	15	14	13	12	11	10	9	8	7	6	5	4	3	2	1	ASSEMBLY PART NUMBER	FORD PART NUMBER
							64	63						57		55	54			51		49	48					43			39				36					30			27	26	25			22						15				11		9	8		6	5	4	3	2	1	9-2035383-7	8U5T-14A464-BA-107
							64							57		55	54			51		49	48					43		41		39			36	35		33			30				26	25	24	23	22			18	17		15				11	10	9	8		6	5	4	3		1	9-2035383-4	8U5T-14A464-BA-106
							64							57		55	54			51		49	48							41					36	35		33			30				26	25	24	23				18	17		15						9					4	3		1	9-2035383-2	8U5T-14A464-BA-105
															56	55	54			51		49										39			36	35		33						27	26	25	24	23					17		15			12	11	10	9	8		6		4	3		1	9-2035383-0	8U5T-14A464-BA-104
			66	65	64	63								57			54			51		49	48					43							36					30				26	25			22		20				15				11	10		8		6	5		3	2		8-2035383-9	8U5T-14A464-BA-103
					64	63								57			54			51		49	48					43			39	38			36					30			27	26	25			22						15				11	10		8		6	5	4	3	2		8-2035383-8	8U5T-14A464-BA-102
					64	63								57						51		49	48					43			39	38			36					30			27	26	25			22						15				11	10		8		6	5	4		2		8-2035383-7	8U5T-14A464-BA-101
			66		64	63								57			54			51		49	48					43				38			36					30				26	25					20				15				11	10		8		6	5		3	2		8-2035383-6	8U5T-14A464-BA-100
					64	63								57		55				51		49	48					43			39				36					30			27	26	25			22						15				11	10	9	8		6		4		2	1	8-2035383-5	8U5T-14A464-BA-099
					64									57		55	54			51		49	48							41					36	35	34	33			30				26	25	24	23				18	17		15						9					4	3		1	8-2035383-4	8U5T-14A464-BA-098
																55	54			51		49								41					36	35	34	33		31	30				26	25	24	23				18	17		15						9					4	3		1	8-2035383-2	8U5T-14A464-BA-097
																55	54		52	51		49								41					36	35	34	33		31	30				26	25	24	23				18	17		15						9					4	3		1	8-2035383-1	8U5T-14A464-BA-096
					64	63								57		55				51		49	48					43			39				36					30			27	26	25			22						15				11	10	9	8		6	5	4		2	1	8-2035383-0	8U5T-14A464-BA-095
					64	63								57		55				51		49	48					43			39				36					30			27	26	25	24	23	22						15				11	10	9	8		6		4		2	1	7-2035383-9	8U5T-14A464-BA-094
														57		55	54					49						43		41		39				35		33			30			27	26		24	23	22						15				11	10	9	8		6	5	4	3		1	7-2035383-8	8U5T-14A464-BA-093
														57		55	54					49						43		41		39				35		33			30			27	26		24	23	22				17		15				11	10	9			6	5	4	3		1	7-2035383-6	8U5T-14A464-BA-092
					64	63								57		55	54			51		49	48							41					36		34	33			30			27	26	25						18			15						9					4	3		1	7-2035383-5	8U5T-14A464-BA-091
					64	63								57		55	54			51		49	48							41					36		34	33			30			27	26	25	24	23				18			15						9					4	3		1	7-2035383-4	8U5T-14A464-BA-090
					64	63								57						51		49	48					43			39				36					30			27	26	25			22						15				11	10		8		6	5	4		2		7-2035383-3	8U5T-14A464-BA-089
					64	63								57			54			51		49	48					43			39				36					30			27	26	25			22						15				11	10		8		6	5	4	3	2		7-2035383-2	8U5T-14A464-BA-088
					64	63								57			54			51		49	48					43							36					30				26	25			22						15				11	10		8		6	5		3	2		7-2035383-1	8U5T-14A464-BA-087
					64	63								57		55	54			51		49	48					43			39				36					30			27	26	25			22						15				11	10	9	8		6	5	4	3	2		7-2035383-0	8U5T-14A464-BA-086
					64	63								57		55	54			51		49	48							41					36			33			30			27	26		24	23				18			15						9					4				6-2035383-9	8U5T-14A464-BA-085
														57		55	54			51		49						43			39				36	35		33			30			27	26	25			22				17		15				11	10	9	8		6	5	4	3	2	1	6-2035383-8	8U5T-14A464-BA-084
														57		55	54			51		49						43		41		39			36	35		33			30			27	26	25			22				17		15				11	10	9	8		6	5	4	3		1	6-2035383-7	8U5T-14A464-BA-083
					64	63								57			54	53		51		49	48					43			39				36			33			30			27	26	25			22			18			15	14			11	10	9	8		6	5	4	3	2	1	6-2035383-6	8U5T-14A464-BA-082
					64									57		55	54			51		49	48					43		41		39			36	35	34	33			30				26	25	24	23	22			18	17		15				11	10	9	8		6	5	4	3		1	6-2035383-4	8U5T-14A464-BA-081
					64	63								57						51		49	48					43			39				36					30			27	26	25			22						15				11	10	9	8		6	5	4		2		6-2035383-3	8U5T-14A464-BA-080
					64	63								57		55				51		49	48					43			39				36					30			27	26	25	24	23	22						15				11	10	9	8		6		4		2		6-2035383-2	8U5T-14A464-BA-079
					64	63								57			54			51		49	48					43			39				36					30			27	26	25	24	23	22						15				11	10	9	8		6	5	4	3	2		6-2035383-1	8U5T-14A464-BA-078
					64									57		55	54			51		49	48					43		41		39			36		34	33			30				26	25	24	23	22			18	17		15				11	10	9	8		6	5	4	3		1	5-2035383-9	8U5T-14A464-BA-077
					64	63								57		55				51		49	48					43			39				36					30			27	26	25	24	23	22						15				11	10	9	8		6	5	4		2		5-2035383-7	8U5T-14A464-BA-076
					64	63								57		55				51		49	48					43			39				36					30			27	26	25			22						15				11	10	9	8		6	5	4		2		5-2035383-6	8U5T-14A464-BA-075
															56	55	54			51		49									39			36	35		33						27	26	25	24	23					17		15			12	11	10	9	8		6	5	4	3		1	5-2035383-5	8U5T-14A464-BA-074
					64									57	56		54			51		49	48								39			36	35		33			30			27	26	25	24	23	22				17		15			12	11	10	9	8		6	5	4	3		1	5-2035383-4	8U5T-14A464-BA-073
						63								57		55	54			51								43			39				36	35	34	33						27	26	25	24	23	22			18	17		15				11	10	9	8		6		4	3	2	1	5-2035383-1	8U5T-14A464-BA-072
					64	63								57		55				51		49	48					43			39				36					30			27	26	25			22			18	17		15				11	10	9	8		6	5	4		2	1	5-2035383-0	8U5T-14A464-BA-071
					64	63								57		55	54			51		49	48					43		41		39			36			33			30			27	26	25			22						15				11	10	9	8		6	5	4	3		1	4-2035383-8	8U5T-14A464-BA-070
					64	63								57		55	54			51		49	48					43			39				36					30			27	26	25			22						15				11	10	9	8		6	5	4	3	2	1	4-2035383-7	8U5T-14A464-BA-069
					64	63								57		55	54			51		49	48					43		41		39			36					30			27	26	25			22						15				11	10	9	8		6	5	4	3		1	4-2035383-6	8U5T-14A464-BA-068
						63								57		55	54			51								43			39				36	35		33						27	26	25	24	23	22			18	17		15				11	10	9	8		6	5	4	3	2	1	4-2035383-5	8U5T-14A464-BA-067
						63								57		55	54			51								43			39				36	35		33	32					27	26	25	24	23	22			18	17		15				11	10	9	8		6	5	4	3	2	1	4-2035383-2	8U5T-14A464-BA-066
					64	63								57		55	54			51		49	48							41					36			33			30			27	26	25						18			15						9					4				4-2035383-1	8U5T-14A464-BA-065
					64	63								57		55				51			48					43			39				36					30			27	26	25			22			18	17		15				11	10	9	8		6	5	4		2	1	4-2035383-0	8U5T-14A464-BA-064
														57		55	54			51		49						43		41		39			36	35		33			30			27	26	25	24	23	22				17		15				11	10	9	8		6	5	4	3		1	3-2035383-8	8U5T-14A464-BA-063
														57		55	54					49						43		41		39				35		33			30			27	26		24	23	22				17		15				11	10	9	8		6	5	4	3		1	3-2035383-7	8U5T-14A464-BA-062
														57		55	54			51		49						43		41		39			36	35		33			30			27	26	25	24	23					17		15					10	9	8		6	5	4	3		1	3-2035383-5	8U5T-14A464-BA-061
CAVITIES WITH A NUMERIC SYMBOL INDICATES CLOSED TERMINAL LOCATIONS														57		55				51		49						43							36	35		33			30			27		25			22			18	17		15				11	10	9	8		6			3	2	1	3-2035383-4	8U5T-14A464-BA-060
					64	63								57		55	54			51		49	48							41					36			33			30			27	26	25	24	23				18			15						9					4				3-2035383-3	8U5T-14A464-BA-059
BLANK CAVITIES INDICATES OPEN TERMINAL HOLE LOCATIONS								63						57		55				51		49						43			39				36	35		33			30			27	26	25			22			18	17		15				11	10	9	8		6	5	4		2	1	3-2035383-2	8U5T-14A464-BA-058
								63						57		55				51		49						43			39				36	35		33			30			27	26	25	24	23	22			18	17		15				11	10	9	8		6	5	4		2	1	3-2035383-1	8U5T-14A464-BA-057

8U5T-14A464-B* PIN-OUT CHART

THIS DRAWING IS A CONTROLLED DOCUMENT.

DIMENSIONS: mm

TOLERANCES UNLESS OTHERWISE SPECIFIED:
0 PLC ±-
1 PLC ±0.3
2 PLC ±0.10
3 PLC ±-
4 PLC ±-
ANGLES ±1°

MATERIAL - -
FINISH - -

DWN R. VESTAL 15APR2005
CHK T. VALASEK 15APR2005
APVD T. VALASEK 15APR2005
PRODUCT SPEC -
APPLICATION SPEC -
WEIGHT -

TE Connectivity

NAME 70-WAY HARNESS ASSEMBLY

SIZE A1 | CAGE CODE 00779 | DRAWING NO C-1438136 | RESTRICTED TO -

CUSTOMER DRAWING | SCALE 2:1 | SHEET 8 OF 11 | REV G48

4805 (3/13)

THIS DRAWING IS UNPUBLISHED. RELEASED FOR PUBLICATION 20
© COPYRIGHT 20 BY - ALL RIGHTS RESERVED.

REVISIONS

P	LTR	DESCRIPTION	DATE	DWN	APVD
	-	SEE SHEET 1	-	-	-

KEYING OPTION F

TERMINAL HOLE POSITION	53	52	37	36	17	15	8	7	ASSEMBLY PART NUMBER	FORD PART NUMBER
CAVITIES WITH A NUMERIC SYMBOL INDICATES CLOSED TERMINAL LOCATIONS	53	52	37	36	17	15	8	7	3-2035383-6	AU5T-14A464-CA-003
	53	52		36			8	7	2-2035383-8	AU5T-14A464-CA-002
BLANK CAVITIES INDICATES OPEN TERMINAL HOLE LOCATIONS	53	52	37	36	17	15			9-1456659-0	AU5T-14A464-CA-001
									1438136-6 (6)	AU5T-14A464-CA-000

TERMINAL HOLE POSITION	60	59	58	57	44	28	24	13	11
CAVITIES WITH A NUMERIC SYMBOL INDICATES CLOSED TERMINAL LOCATIONS	60	59	58	57					
	60	59	58	57	44	28	24	13	11

AU5T-14A464-C* PIN-OUT CHART

KEYING OPTION E

TERMINAL HOLE POSITION	61	60	59	58	57	56	48	47	46	45	44	43	42	41	40	38	37	36	35	31	29	28	27	26	25	24	23	22	21	20	19	18	17	16	15	14	13	12	11	10	9	8	7	6	5	4	3	2	1	ASSEMBLY PART NUMBER	FORD PART NUMBER
KEYING OPTION E																																																			
	61	60	59	58	57	56						43	42	41	40	38	37	36	35	31		28	27	26	25		23	22	21	20	19		17		15	14								5	4	3		1	2138952-1	AU5T-14A464-UA-013
	61	60	59	58								43			40	38	37		35	31		28	27	26	25		23	22	21	20	19		17		15	14								5	4	3		1	9-2035383-6	AU5T-14A464-UA-012
	61	60	59	58	57	56	48	47		45	44	43	42	41	40	38	37	36	35	31		28	27	26	25	24	23	22	21	20	19			16		14						7	6	5	4		2		7-2035383-7	AU5T-14A464-UA-011
	61	60	59	58	57	56						43	42	41	40	38	37	36	35	31		28	27	26	25	24	23	22	21	20	19		17		15	14								5	4	3		1	5-2035383-2	AU5T-14A464-UA-010
	61	60	59	58								43			40	38	37		35	31		28	27	26		24	23	22	21	20	19		17		15	14								5	4	3		1	4-2035383-9	AU5T-14A464-UA-009
	61	60	59	58								43			40	38	37		35	31		28	27					22	21		19		17		15	14								5	4	3		1	4-2035383-4	AU5T-14A464-UA-008
	61	60	59	58								43			40	38	37		35	31		28	27	26			23	22	21	20	19		17		15	14								5		3		1	2-2035383-6	AU5T-14A464-UA-007
	61	60	59	58								43			40	38	37		35	31		28	27	26			23	22	21	20	19		17		15	14								5	4	3		1	2-2035383-2	AU5T-14A464-UA-006
	61	60	59	58	57	56	48	47				43	42	41		38	37	36				28	27		25			22			19		17	16	15	14								5		3	2	1	1-2035383-6	AU5T-14A464-UA-005
	61	60	59	58	57	56	48	47	46			43	42	41	40				35	31	29	28	27	26	25		23	22	21	20	19		17		15	14								5	4	3		1	9-1456659-7	AU5T-14A464-UA-004
CAVITIES WITH A NUMERIC SYMBOL INDICATES CLOSED TERMINAL LOCATIONS			59	58			48	47	46			43	42	41					35	31	29	28	27	26	25	24	23		21		19		17		15	14								5	4	3		1	9-1456659-5	AU5T-14A464-UA-003
			59	58			48	47	46			43	42	41					35	31	29	28	27	26		24	23		21		19		17		15	14								5	4	3		1	9-1456659-4	AU5T-14A464-UA-002
BLANK CAVITIES INDICATES OPEN TERMINAL HOLE LOCATIONS	61	60	59	58	57	56	48	47				43	42	41	40	38	37	36	35	31		28	27	26	25		23	22	21	20	19			16										5	4		2		9-1456659-2	AU5T-14A464-UA-001
																																																		1438136-5	AU5T-14A464-UA-000

AU5T-14A464-U* PIN-OUT CHART

THIS DRAWING IS A CONTROLLED DOCUMENT.

DIMENSIONS: mm

TOLERANCES UNLESS OTHERWISE SPECIFIED:
0 PLC ±-
1 PLC ±0.3
2 PLC ±0.10
3 PLC ±-
4 PLC ±-
ANGLES ±1°

MATERIAL - -
FINISH - -

DWN R. VESTAL 15APR2005
CHK T. VALASEK 15APR2005
APVD T. VALASEK 15APR2005
PRODUCT SPEC -
APPLICATION SPEC -
WEIGHT -

TE Connectivity

NAME 70-WAY HARNESS ASSEMBLY

SIZE	CAGE CODE	DRAWING NO	RESTRICTED TO
A1	00779	C-1438136	-

CUSTOMER DRAWING

SCALE 2:1 SHEET 9 OF 11 REV G48

4805 (3/13)

THIS DRAWING IS UNPUBLISHED. RELEASED FOR PUBLICATION 20
© COPYRIGHT 20 BY - ALL RIGHTS RESERVED.

REVISIONS

P	LTR	DESCRIPTION	DATE	DWN	APVD
	-	SEE SHEET 1	-	-	-

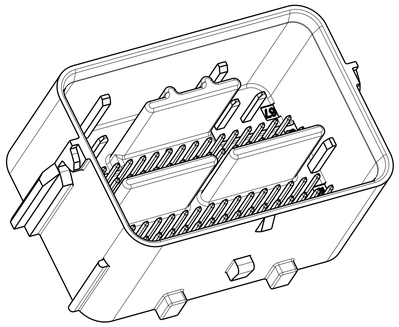

SCALE 2:1

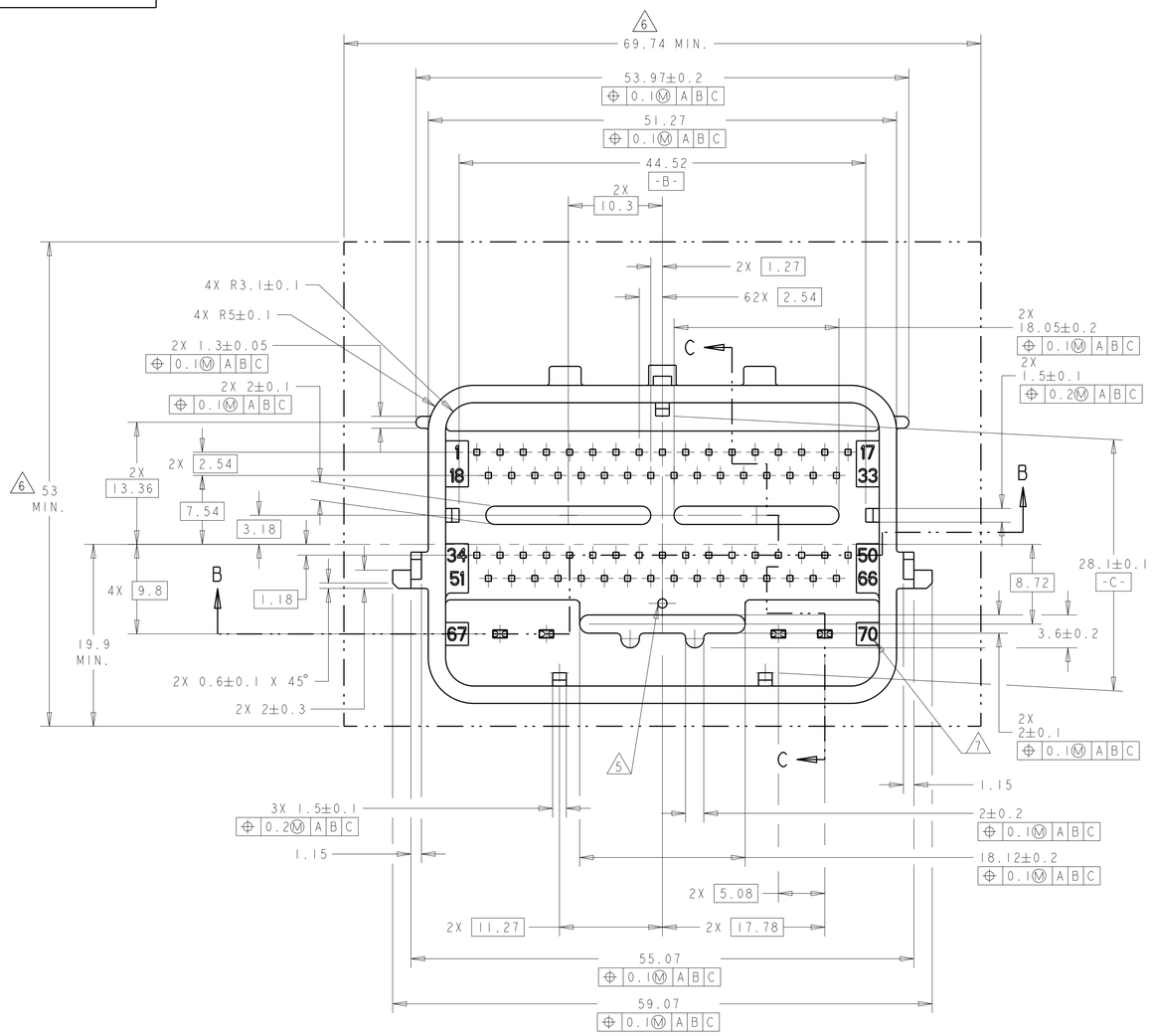

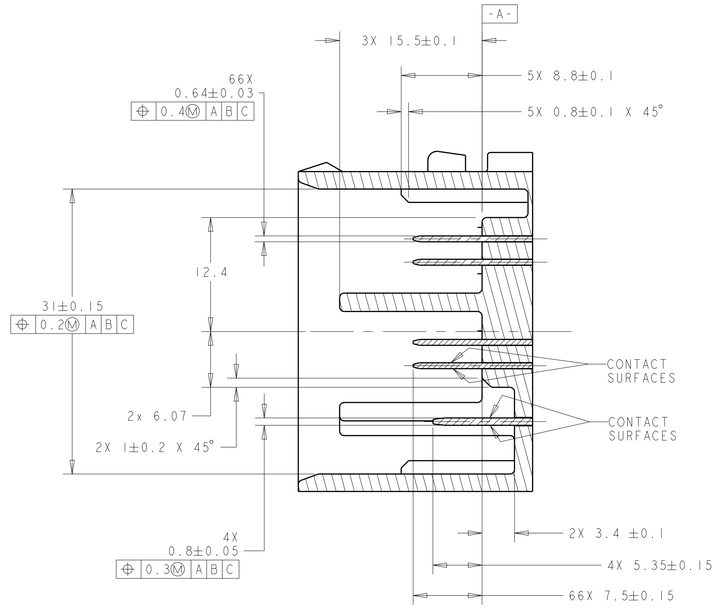

SECTION C-C

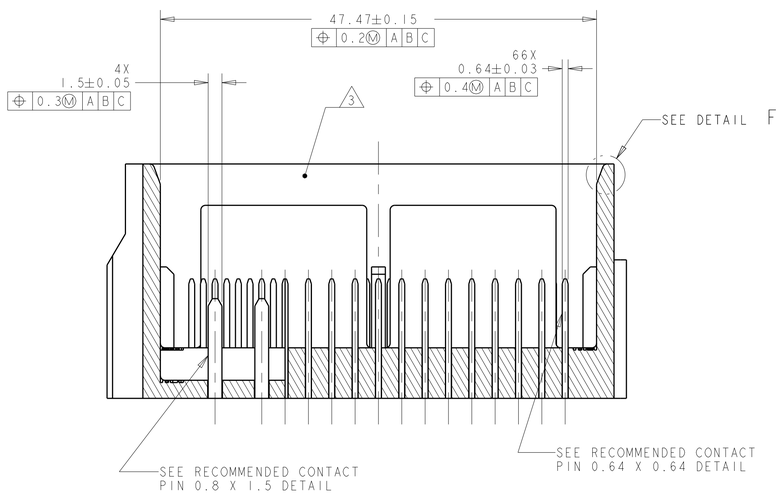

SECTION B-B

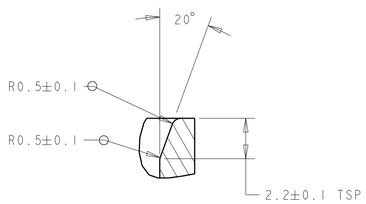

DETAIL F
SCALE 6:1

NOTES: UNLESS OTHERWISE SPECIFIED

1. GENERAL TOLERANCE:
   ±0.3 ALL ONE PLACE DIMENSIONS
   ±0.10 ALL TWO PLACE DIMENSIONS
   ±1°00′ ALL ANGULAR DIMENSIONS
2. DRAFT ANGLE PERMISSIBLE ONLY WITHIN DRAWING TOLERANCE.

3. SEALING SURFACE, NO WITNESS LINES OF DAMAGE PERMITTED.

4. ALL UNMARKED RADII TO BE 0.5 MAX., UNLESS OTHERWISE SPECIFIED

5. VENT HOLE SIZE AND LOCATION IS OPTIONAL.

6. THIS AREA TO REMAIN CLEAR FOR THE HARNESS ASSEMBLY.

7. TERMINAL POSITION INDENTIFICATION.

8. MATES WITH TYCO ELECTRONICS PART# 1438136-*

THIS DRAWING IS A CONTROLLED DOCUMENT.

DIMENSIONS: mm

TOLERANCES UNLESS OTHERWISE SPECIFIED:
0 PLC ±-
1 PLC ±0.3
2 PLC ±0.10
3 PLC ±-
4 PLC ±-
ANGLES ±1°

MATERIAL -
FINISH -

DWN R. VESTAL 15APR2005
CHK T. VALASEK 15APR2005
APVD T. VALASEK 15APR2005
PRODUCT SPEC -
APPLICATION SPEC -
WEIGHT -

TE Connectivity

NAME 70-WAY HARNESS ASSEMBLY

SIZE	CAGE CODE	DRAWING NO	RESTRICTED TO
A1	00779	C-1438136	-

CUSTOMER DRAWING

SCALE	SHEET	OF	REV
2:1	10	11	G48

4805 (3/13)

THIS DRAWING IS UNPUBLISHED. RELEASED FOR PUBLICATION 20
© COPYRIGHT 20 BY - ALL RIGHTS RESERVED.

HEADER INTERFACE KEYING OPTIONS

REVISIONS

P	LTR	DESCRIPTION	DATE	DWN	APVD
	-	SEE SHEET 1	-	-	-

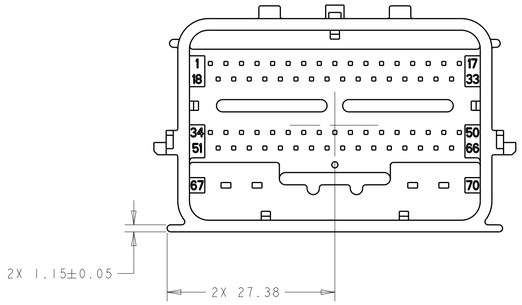

KEYING OPTION "A"
SCALE 2:1

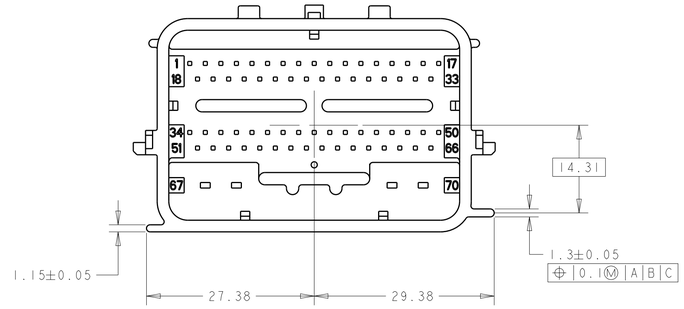

KEYING OPTION "B"
SCALE 2:1

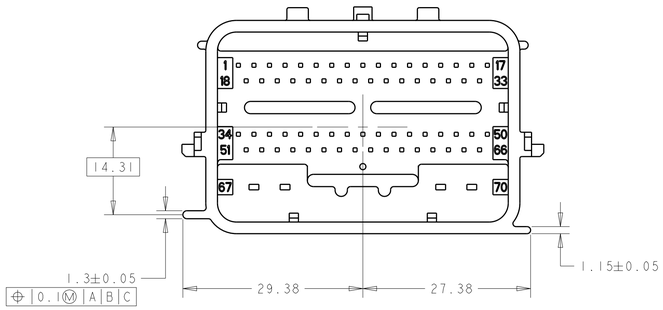

KEYING OPTION "D"
SCALE 2:1

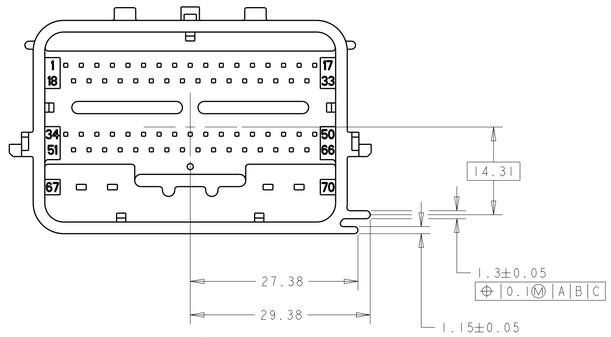

KEYING OPTION" E"
SCALE 2:1

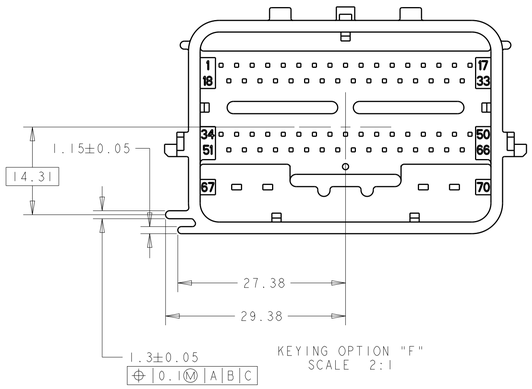

KEYING OPTION "F"
SCALE 2:1

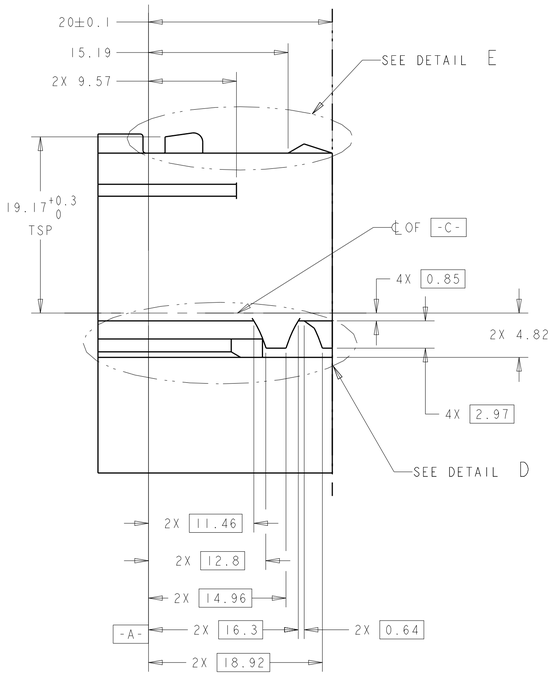

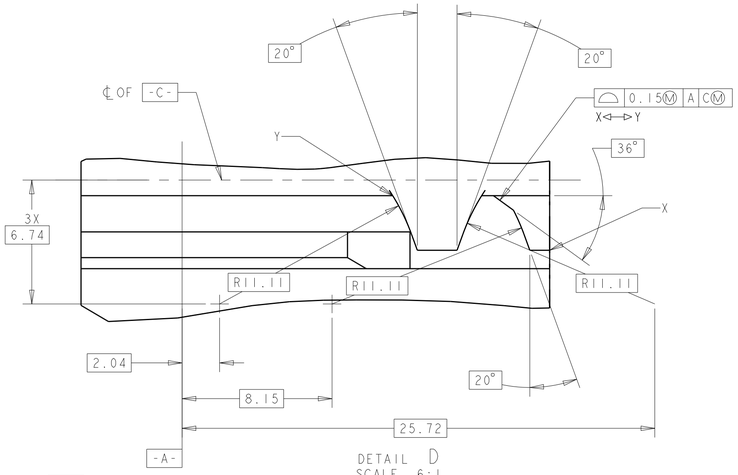

DETAIL D
SCALE 6:1
TYP. 2 PLCS.

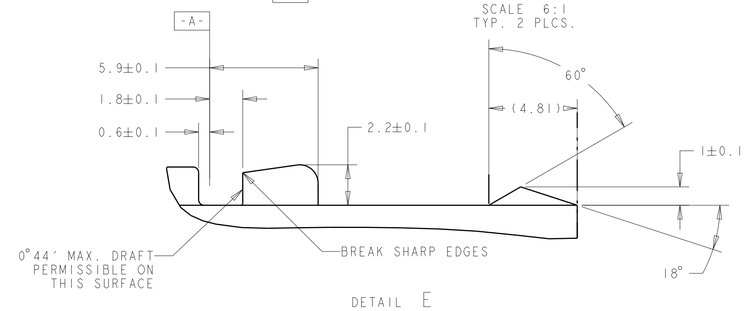

DETAIL E
SCALE 6:1

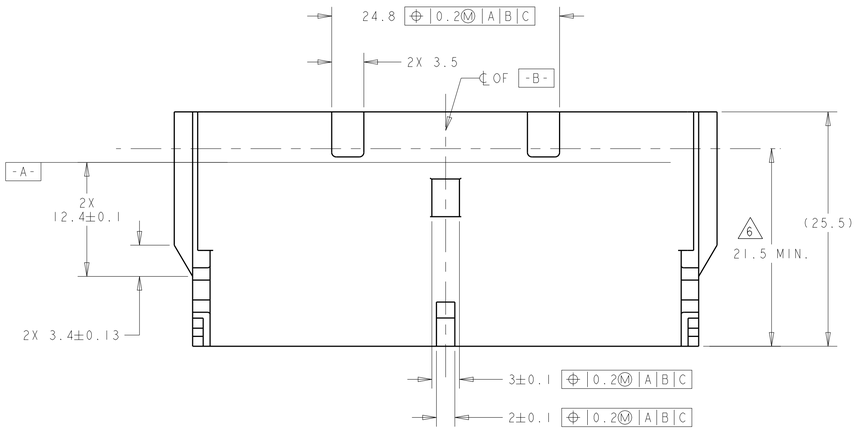

THIS DRAWING IS A CONTROLLED DOCUMENT.

DIMENSIONS: mm

TOLERANCES UNLESS OTHERWISE SPECIFIED:
0 PLC ±-
1 PLC ±0.3
2 PLC ±0.10
3 PLC ±-
4 PLC ±-
ANGLES ±1°

MATERIAL - -
FINISH - -

DWN R. VESTAL 15APR2005
CHK T. VALASEK 15APR2005
APVD T. VALASEK 15APR2005
PRODUCT SPEC -
APPLICATION SPEC -
WEIGHT -

TE Connectivity

NAME 70-WAY HARNESS ASSEMBLY

SIZE	CAGE CODE	DRAWING NO	RESTRICTED TO
A1	00779	C-1438136	-

CUSTOMER DRAWING SCALE 2:1 SHEET 11 OF 11 REV G48

4805 (3/13)

Mouser Electronics

Authorized Distributor

Click to View Pricing, Inventory, Delivery & Lifecycle Information:

TE Connectivity:

1438136-4