© 2020 TE Connectivity. All Rights Reserved.

REVISIONS					
P	LTR	DESCRIPTION	DATE	DWN	APVD
	S10	REVISED PER ECO-09-009758	23APR2009	DLD	DCM
	S11	REVISED PER ECO-09-028550	29DEC2009	DLD	DCM
	S12	REVISED PER ECO-20-012739	18SEP2020	AP	CM

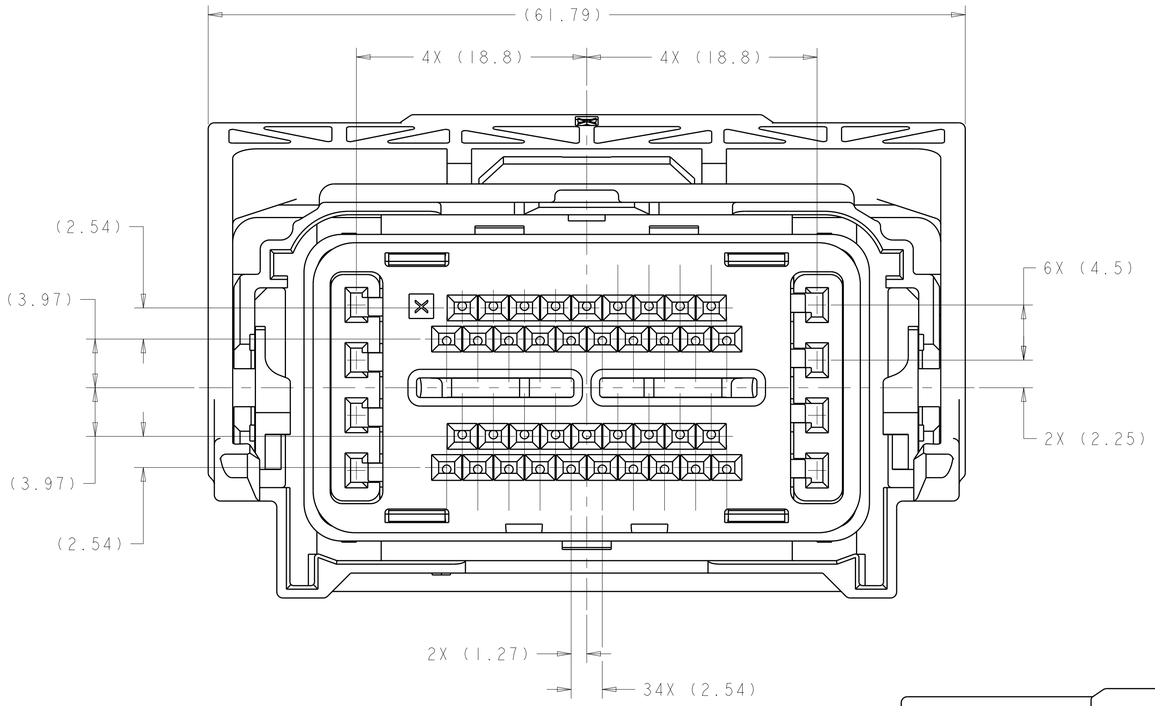

KEYING OPTION "A"
1438082-1 3

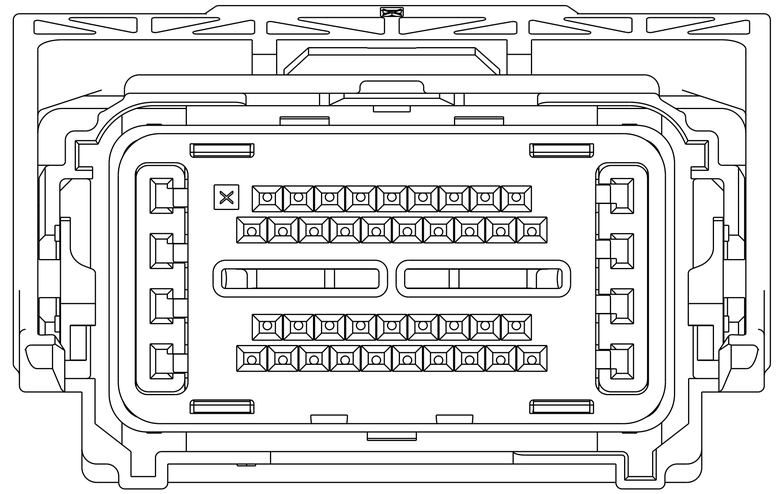

KEYING OPTION "B"
1438082-2 3

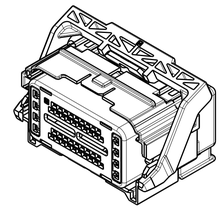

SCALE 1:1

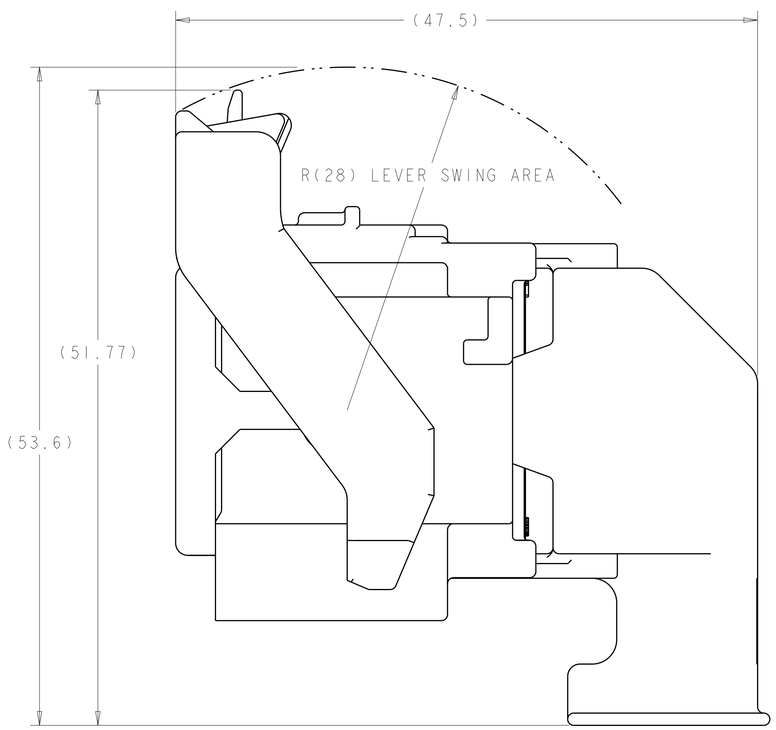

SHOWN WITH CAM LEVER AND SPACER
IN LOADED POSITION WITH
OPTIONAL WIRESHIELD

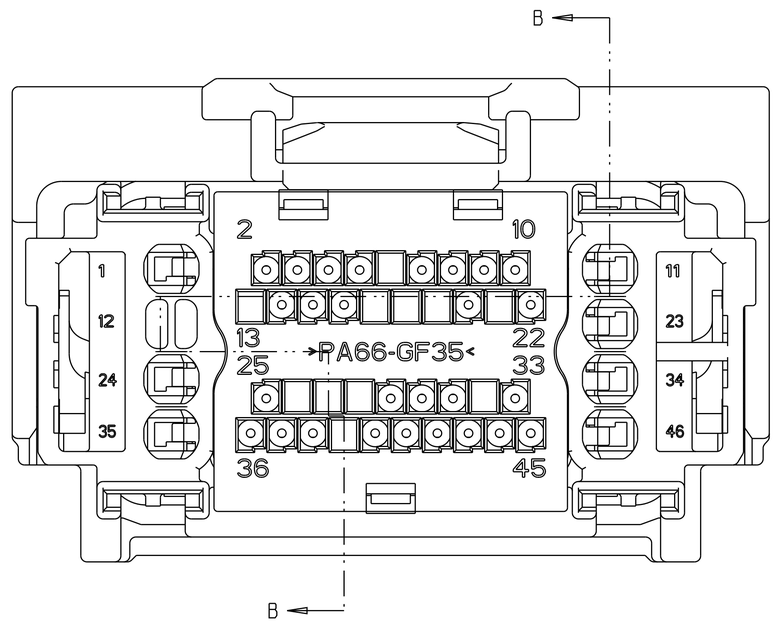

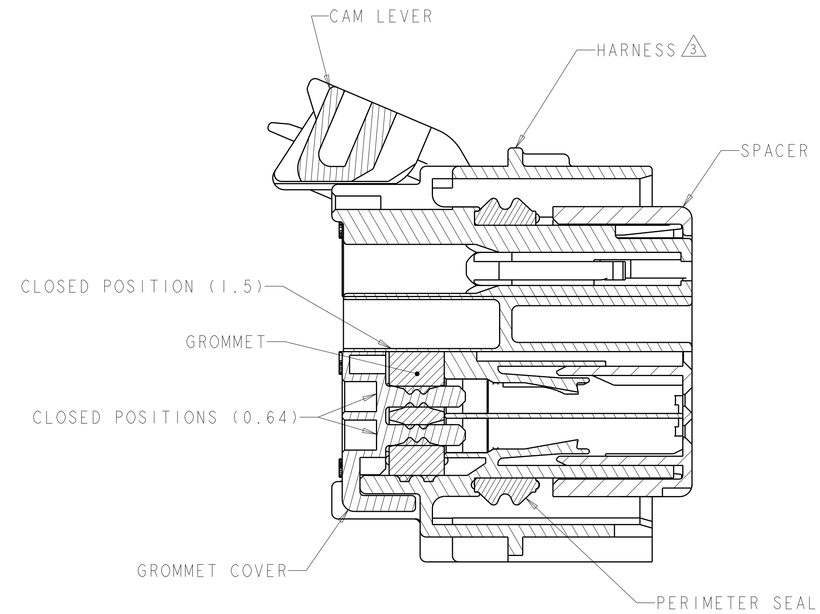

SECTION B-B

1. MATERIAL:
   HARNESS - 35% GLASS FILLED PA66, BLACK
     ALT MAT'L: HARNESS - 30% GLASS FILLED sPS, BLACK
   SPACER - 40% GLASS FILLED PPS+PA66, RED
     ALT MAT'L: 30% GLASS FILLED sPS, RED
     ALT MAT'L: 35% GLASS FILLED PA66, RED
   COVER - 35% GLASS FILLED PA66, BLACK
     ALT MAT'L: COVER - 30% GLASS FILLED LCP, BLACK
   CAM LEVER - 35% GLASS FILLED NYLON, GRAY
   GROMMET - SILICONE, BROWN
   PERIMETER SEAL - SILICONE, GREEN

2. CAM LEVER AND SPACER ARE SHIPPED IN PRE-LATCH POSITION.

3. SEE PINOUT CHART ON SHEETS 2, 3 AND 4 FOR CLOSED CIRCUIT CONFIGURATIONS.

4. CAVITIES WITH A NUMERIC SYMBOL INDICATES CLOSED TERMINAL LOCATIONS.
   BLANK CAVITIES INDICATE OPEN TERMINAL HOLE LOCATIONS.

3 SEE PINOUT CHARTS

PART NUMBER

THIS DRAWING IS A CONTROLLED DOCUMENT.

DIMENSIONS: mm

TOLERANCES UNLESS OTHERWISE SPECIFIED:
0 PLC ±-
1 PLC ±0.3
2 PLC ±0.10
3 PLC ±-
4 PLC ±-
ANGLES ±3°

MATERIAL: SEE TABLE
FINISH: SEE TABLE

DWN R. VESTAL 01AUG2003
CHK D. STRAUSSER 01AUG2003
APVD D. STRAUSSER 01AUG2003
PRODUCT SPEC -
APPLICATION SPEC -
WEIGHT -

TE Connectivity

NAME 46 WAY PCM CONNECTOR HARNESS ASSEMBLY

SIZE A1 | CAGE CODE 00779 | DRAWING NO C-1438082 | RESTRICTED TO

CUSTOMER DRAWING | SCALE 4:1 | SHEET 1 OF 5 | REV S12

4805 (3/13)

© 2020 TE Connectivity. All Rights Reserved.

REVISIONS					
P	LTR	DESCRIPTION	DATE	DWN	APVD
	-	SEE SHEET 1	-	-	-

46	45	44	43	42	41	40	39	38	37	36	35	34	33	32	31	30	29	28	27	26	25	24	23	22	21	20	19	18	17	16	15	14	13	12	11	10	9	8	7	6	5	4	3	2	1	PART NUMBER	FORD PART NUMBER	
	45		43				39		37	36	35				31							24						18	17	16		14	13	12			9		7	6				2	1	9-1438082-7	2LIT-14A464-SD-051	OBSOLETE
				42																						20		18			15	14			11	10		8	7			4	3	2	1	9-1438082-6	2LIT-14A464-SD-050	OBSOLETE
				42																						20		18							11	10									1	9-1438082-5	2LIT-14A464-SD-049	
				42																						20		18							11	10								2	1	9-1438082-4	2LIT-14A464-SD-048	
											35								27																												9-1438082-3	2LIT-14A464-SD-047	
	45		43							36	35			32	31							24			21		19	18	17	16		14		12					7	6						1	9-1438082-1	2LIT-14A464-SD-046	OBSOLETE
46															31																																9-1438082-0	2LIT-14A464-SD-045	OBSOLETE
															31							24								16							8					3	2		8-1438082-9	2LIT-14A464-SD-044	OBSOLETE
																			27																												8-1438082-8	2LIT-14A464-SD-043	
	45	44	43	42		40		38	37	36			33		31		29					24		22		20		18	17	16	15						9	8					3			8-1438082-7	2LIT-14A464-SD-042	
	45	44	43	42		40		38	37	36			33		31		29					24		22	21	20	19	18	17	16	15						9	8		6				2		8-1438082-6	2LIT-14A464-SD-041	
46															31																						9			6			3			8-1438082-5	2LIT-14A464-SD-040	OBSOLETE
			43	42			39		37																	20	19	18							11	10	9							2	1	8-1438082-4	2LIT-14A464-SD-039	OBSOLETE
			43												31		29											18																		8-1438082-3	2LIT-14A464-SD-038	OBSOLETE
	45	44	43	42		40		38	37	36			33		31		29					24		22	21	20		18	17	16	15						9	8						2		8-1438082-0	2LIT-14A464-SD-037	
	45		43							36	35				31							24								16		14		12					7	6				2	1	7-1438082-9	2LIT-14A464-SD-036	OBSOLETE
	45		43							36	35				31							24			21		19			16		14		12					7	6				2	1	7-1438082-8	2LIT-14A464-SD-035	OBSOLETE
			43	42			39	38	37					32				28									19	18	17	16						10	9									7-1438082-5	2LIT-14A464-SD-034	
	45	44	43	42		40		38	37	36			33		31		29					24		22	21	20		18	17	16	15						9	8		6				2		7-1438082-4	2LIT-14A464-SD-033	OBSOLETE
	45	44	43	42		40		38	37	36			33		31							24		22	21	20		18	17	16	15						9	8		6				2		7-1438082-3	2LIT-14A464-SD-032	
						40											29																				9									6-1438082-6	2LIT-14A464-SD-031	
																			27															12						6						6-1438082-3	2LIT-14A464-SD-030	OBSOLETE
																			27																					6		4				6-1438082-2	2LIT-14A464-SD-029	OBSOLETE
																			27																					6						6-1438082-1	2LIT-14A464-SD-028	
																	29	28			25				21			18		16										6	5					5-1438082-6	2LIT-14A464-SD-027	OBSOLETE
																	29	28			25				21					16										6	5					5-1438082-5	2LIT-14A464-SD-026	
																30	29								21			18		16											5					5-1438082-2	2LIT-14A464-SD-025	
			43	42			39		37																	20	19	18	17		15	14			11	10	9	8	7			4	3	2	1	5-1438082-0	2LIT-14A464-SD-024	
				42																											15	14			11	10	9	8	7			4	3		1	4-1438082-9	2LIT-14A464-SD-023	OBSOLETE
			43	42			39		37																	20	19	18	17						11	10	9							2	1	4-1438082-8	2LIT-14A464-SD-022	OBSOLETE
				42																															11	10	9								1	4-1438082-7	2LIT-14A464-SD-021	
			43	42			39		37														23			20	19	18	17						11	10	9							2		4-1438082-2	2LIT-14A464-SD-020	
	45		43							36	35				31							24						18	17	16		14		12					7	6				2	1	4-1438082-0	2LIT-14A464-SD-019	
			43	42			39		37														23			20	19	18	17		15	14			11	10	9	8	7			4	3	2		3-1438082-8	2LIT-14A464-SD-018	
				42																			23								15	14			11	10	9	8	7			4	3			3-1438082-7	2LIT-14A464-SD-017	
			43	42			39		37														23			20	19	18	17	16					11	10	9							2		3-1438082-6	2LIT-14A464-SD-016	
				42																			23												11	10	9									3-1438082-5	2LIT-14A464-SD-015	
	45		43				39		37	36	35				31							24			21		19	18	17	16		14	13	12			9		7	6				2	1	3-1438082-4	2LIT-14A464-SD-014	OBSOLETE
	45		43				39		37	36	35		33		31						25	24			21		19	18	17	16		14	13	12			9		7	6				2	1	3-1438082-3	2LIT-14A464-SD-013	
	45		43							36	35				31							24			21		19	18	17	16		14		12					7	6				2	1	3-1438082-2	2LIT-14A464-SD-012	
				42																											15	14	13			10	9	8	7			4	3			3-1438082-1	2LIT-14A464-SD-011	
			43	42			39		37																	20	19	18	17				13			10	9							2		3-1438082-0	2LIT-14A464-SD-010	
				42																													13			10	9									2-1438082-9	2LIT-14A464-SD-009	
			43	42			39		37																	20	19	18	17		15	14	13			10	9	8	7			4	3	2		2-1438082-5	2LIT-14A464-SD-008	
	45						39		37	36	35		33								25	24			21		19	18	17	16		14	13	12			9		7	6				2	1	2-1438082-3	2LIT-14A464-SD-007	
	45						39		37	36	35											24			21		19	18	17	16		14	13	12			9		7	6				2	1	2-1438082-2	2LIT-14A464-SD-006	
	45									36	35		33								25	24			21		19	18	17	16		14		12					7	6				2	1	1-1438082-9	2LIT-14A464-SD-005	
	45									36	35											24			21		19	18	17	16		14		12					7	6				2	1	1-1438082-8	2LIT-14A464-SD-004	
	45										35											24			21		19	18	17	16		14		12					7	6				2	1	1-1438082-1	2LIT-14A464-SD-003	
																	29	28							21					16											5					1438082-6	2LIT-14A464-SD-002	
											35											24			21		19	18	17					12						6					1	1438082-5	2LIT-14A464-SD-001	OBSOLETE
																																														1438082-1	2LIT-14A464-SD-000	
TERMINAL HOLE POSITION																																																

PIN-OUT CHART KEYING OPTION "A" (4)

THIS DRAWING IS A CONTROLLED DOCUMENT.

DIMENSIONS: mm

TOLERANCES UNLESS OTHERWISE SPECIFIED:
0 PLC ±-
1 PLC ±0.3
2 PLC ±0.10
3 PLC ±-
4 PLC ±-
ANGLES ±3°

MATERIAL: SEE TABLE -

FINISH: SEE TABLE -

DWN R. VESTAL 01AUG2003
CHK D. STRAUSSER 01AUG2003
APVD D. STRAUSSER 01AUG2003

PRODUCT SPEC -

APPLICATION SPEC -

WEIGHT -

TE Connectivity

NAME 46 WAY PCM CONNECTOR HARNESS ASSEMBLY

SIZE A1 | CAGE CODE 00779 | DRAWING NO C-1438082 | RESTRICTED TO

CUSTOMER DRAWING

SCALE 4:1 | SHEET 2 OF 5 | REV S12

4805 (3/13)

© 2020 TE Connectivity. All Rights Reserved.

REVISIONS

P	LTR	DESCRIPTION	DATE	DWN	APVD
	-	SEE SHEET 1	-	-	-

46	45	44	43	42	41	40	39	38	37	36	35	34	33	32	31	30	29	28	27	26	25	24	23	22	21	20	19	18	17	16	15	14	13	12	11	10	9	8	7	6	5	4	3	2	1	PART NUMBER	FORD PART NUMBER	
		44									35			32										22										12			9		7	6					1	6-1438735-7	2LIT-14A464-SD-086	
		~~44~~									~~35~~			~~32~~																				~~12~~			~~9~~		~~7~~	~~6~~					~~1~~	~~6-1438735-3~~	~~2LIT-14A464-SD-085~~	OBSOLETE
											35																																			6-1438735-2	2LIT-14A464-SD-084	
			43	42		40	39		37								29									20		18			15	14			11	10	9	8	7			4	3		1	6-1438735-1	2LIT-14A464-SD-083	
	~~45~~		~~43~~					~~38~~		~~36~~					~~31~~						~~25~~	~~24~~						~~18~~	~~17~~	~~16~~		~~14~~		~~12~~					~~7~~	~~6~~				~~2~~	~~1~~	~~5-1438735-0~~	~~2LIT-14A464-SD-082~~	OBSOLETE
	~~45~~		~~43~~					~~38~~		~~36~~					~~31~~						~~25~~	~~24~~								~~16~~		~~14~~		~~12~~					~~7~~	~~6~~				~~2~~	~~1~~	~~4-1438735-9~~	~~2LIT-14A464-SD-081~~	OBSOLETE
	~~45~~		~~43~~					~~38~~		~~36~~				~~32~~	~~31~~						~~25~~	~~24~~			~~21~~		~~19~~	~~18~~	~~17~~	~~16~~		~~14~~		~~12~~					~~7~~	~~6~~					~~1~~	~~4-1438735-8~~	~~2LIT-14A464-SD-080~~	OBSOLETE
	~~45~~		~~43~~				~~39~~	~~38~~	~~37~~	~~36~~					~~31~~						~~25~~	~~24~~						~~18~~	~~17~~	~~16~~		~~14~~	~~13~~	~~12~~			~~9~~		~~7~~	~~6~~				~~2~~	~~1~~	~~4-1438735-7~~	~~2LIT-14A464-SD-079~~	OBSOLETE
				42																						20		18					13		11	10								2	1	3-1438735-8	2LIT-14A464-SD-078	
				42																						20		18					13		11	10									1	3-1438735-7	2LIT-14A464-SD-077	
	~~45~~		~~43~~				~~39~~	~~38~~	~~37~~	~~36~~					~~31~~						~~25~~	~~24~~			~~21~~	~~20~~	~~19~~	~~18~~	~~17~~			~~14~~	~~13~~	~~12~~			~~9~~							~~2~~	~~1~~	~~3-1438735-6~~	~~2LIT-14A464-SD-076~~	OBSOLETE
	~~45~~		~~43~~					~~38~~		~~36~~					~~31~~						~~25~~	~~24~~			~~21~~	~~20~~	~~19~~	~~18~~	~~17~~			~~14~~		~~12~~										~~2~~	~~1~~	~~3-1438735-5~~	~~2LIT-14A464-SD-075~~	OBSOLETE
			~~43~~	~~42~~		~~40~~	~~39~~		~~37~~								~~29~~									~~20~~		~~18~~			~~15~~	~~14~~			~~11~~	~~10~~	~~9~~	~~8~~	~~7~~			~~4~~	~~3~~	~~2~~	~~1~~	~~3-1438735-3~~	~~2LIT-14A464-SD-074~~	OBSOLETE
	45		43				39	38	37	36					31						25	24				20	19	18	17			14	13	12			9							2	1	3-1438735-2	2LIT-14A464-SD-073	
	~~45~~		~~43~~					~~38~~		~~36~~					~~31~~						~~25~~	~~24~~			~~21~~	~~20~~	~~19~~	~~18~~	~~17~~	~~16~~		~~14~~		~~12~~					~~7~~					~~2~~	~~1~~	~~3-1438735-1~~	~~2LIT-14A464-SD-072~~	OBSOLETE
	~~45~~		~~43~~				~~39~~	~~38~~	~~37~~	~~36~~					~~31~~						~~25~~	~~24~~			~~21~~	~~20~~	~~19~~	~~18~~	~~17~~	~~16~~		~~14~~	~~13~~	~~12~~			~~9~~		~~7~~					~~2~~	~~1~~	~~3-1438735-0~~	~~2LIT-14A464-SD-071~~	OBSOLETE
	~~45~~		~~43~~					~~38~~		~~36~~					~~31~~						~~25~~	~~24~~			~~21~~	~~20~~	~~19~~			~~16~~		~~14~~		~~12~~					~~7~~					~~2~~	~~1~~	~~2-1438735-9~~	~~2LIT-14A464-SD-070~~	OBSOLETE
	~~45~~		~~43~~				~~39~~	~~38~~	~~37~~	~~36~~					~~31~~						~~25~~	~~24~~			~~21~~	~~20~~	~~19~~			~~16~~		~~14~~	~~13~~	~~12~~			~~9~~		~~7~~					~~2~~	~~1~~	~~2-1438735-8~~	~~2LIT-14A464-SD-069~~	OBSOLETE
	45		43					38		36					31						25	24				20	19	18	17			14		12										2	1	2-1438735-6	2LIT-14A464-SD-068	
													33																				13							6	5					2-1438735-5	2LIT-14A464-SD-067	
	~~45~~	~~44~~	~~43~~	~~42~~		~~40~~		~~38~~	~~37~~	~~36~~			~~33~~		~~31~~							~~24~~		~~22~~	~~21~~	~~20~~		~~18~~	~~17~~	~~16~~	~~15~~						~~9~~	~~8~~						~~2~~		~~2-1438735-4~~	~~2LIT-14A464-SD-066~~	OBSOLETE
			~~43~~												~~31~~		~~29~~											~~18~~										~~8~~						~~2~~		~~2-1438735-1~~	~~2LIT-14A464-SD-065~~	OBSOLETE
	~~45~~		~~43~~					~~38~~		~~36~~	~~35~~				~~31~~						~~25~~	~~24~~			~~21~~					~~16~~		~~14~~		~~12~~					~~7~~	~~6~~				~~2~~	~~1~~	~~2-1438735-0~~	~~2LIT-14A464-SD-064~~	OBSOLETE
	~~45~~		~~43~~				~~39~~	~~38~~	~~37~~	~~36~~	~~35~~				~~31~~						~~25~~	~~24~~						~~18~~	~~17~~	~~16~~		~~14~~	~~13~~	~~12~~			~~9~~		~~7~~	~~6~~				~~2~~	~~1~~	~~1-1438735-9~~	~~2LIT-14A464-SD-063~~	OBSOLETE
	~~45~~		~~43~~					~~38~~		~~36~~	~~35~~			~~32~~	~~31~~						~~25~~	~~24~~			~~21~~		~~19~~	~~18~~	~~17~~	~~16~~		~~14~~		~~12~~					~~7~~	~~6~~					~~1~~	~~1-1438735-8~~	~~2LIT-14A464-SD-062~~	OBSOLETE
	~~45~~		~~43~~					~~38~~		~~36~~	~~35~~				~~31~~						~~25~~	~~24~~								~~16~~		~~14~~		~~12~~					~~7~~	~~6~~				~~2~~	~~1~~	~~1-1438735-7~~	~~2LIT-14A464-SD-061~~	OBSOLETE
	45		43					38		36	35				31						25	24			21		19			16		14		12					7	6				2	1	1-1438735-6	2LIT-14A464-SD-060	
	45		43					38		36	35				31						25	24						18	17	16		14		12					7	6				2	1	1-1438735-5	2LIT-14A464-SD-059	
	~~45~~		~~43~~				~~39~~	~~38~~	~~37~~	~~36~~	~~35~~				~~31~~						~~25~~	~~24~~			~~21~~		~~19~~	~~18~~	~~17~~	~~16~~		~~14~~	~~13~~	~~12~~			~~9~~		~~7~~	~~6~~				~~2~~	~~1~~	~~1-1438735-4~~	~~2LIT-14A464-SD-058~~	OBSOLETE
	45		43					38		36	35				31						25	24			21		19	18	17	16		14		12					7	6				2	1	1-1438735-3	2LIT-14A464-SD-057	
				42					37																	20		18			15	14			11	10	9	8	7			4	3	2	1	1-1438735-2	2LIT-14A464-SD-056	
	45		43							36	35				31							24			21		19			16		14		12					7	6					1	1-1438735-1	2LIT-14A464-SD-055	
											35								27																								3		1-1438735-0	2LIT-14A464-SD-054	
			~~43~~												~~31~~		~~29~~											~~18~~									~~9~~	~~8~~						~~2~~		~~1438735-9~~	~~2LIT-14A464-SD-053~~	OBSOLETE
											35								27																				7							1438735-8	2LIT-14A464-SD-052	

TERMINAL HOLE POSITION

PIN-OUT CHART KEYING OPTION "A" (4)

THIS DRAWING IS A CONTROLLED DOCUMENT.

DIMENSIONS: mm

TOLERANCES UNLESS OTHERWISE SPECIFIED:
0 PLC ±-
1 PLC ±0.3
2 PLC ±0.10
3 PLC ±-
4 PLC ±-
ANGLES ±3°

MATERIAL: SEE TABLE -

FINISH: SEE TABLE -

DWN R. VESTAL 01AUG2003
CHK D. STRAUSSER 01AUG2003
APVD D. STRAUSSER 01AUG2003

PRODUCT SPEC -

APPLICATION SPEC -

WEIGHT -

TE Connectivity

NAME 46 WAY PCM CONNECTOR HARNESS ASSEMBLY

SIZE A1 | CAGE CODE 00779 | DRAWING NO C-1438082 | RESTRICTED TO

CUSTOMER DRAWING | SCALE 4:1 | SHEET 3 OF 5 | REV S12

4805 (3/13)

© 2020 TE Connectivity. All Rights Reserved.

REVISIONS					
P	LTR	DESCRIPTION	DATE	DWN	APVD
	-	SEE SHEET 1	-	-	-

46	45	44	43	42	41	40	39	38	37	36	35	34	33	32	31	30	29	28	27	26	25	24	23	22	21	20	19	18	17	16	15	14	13	12	11	10	9	8	7	6	5	4	3	2	1	PART NUMBER	FORD PART NUMBER	
		44	43	42	41			38												26																			7		5					9-1438082-9	2LIT-14A464-TD-044	
		44						38												26																			7							9-1438082-8	2LIT-14A464-TD-043	
						40	39	38			35	34										24			21			18		16	15		13	12			9	8	7		5					9-1438082-2	2LIT-14A464-TD-042	
46			43	42		40					35	34			31			28				24			21		19							12			9				5	4			1	8-1438082-2	2LIT-14A464-TD-041	OBSOLETE
						40	39	38			35	34										24			21			18		16	15		13	12				8	7		5					8-1438082-1	2LIT-14A464-TD-040	
											35								27																		9			6			3			7-1438082-7	2LIT-14A464-TD-039	OBSOLETE
			43	42			39	38	37					32				28									19	18	17	16						10	9									7-1438082-6	2LIT-14A464-TD-038	OBSOLETE
			43	42		40					35							28				24			21		19							12							5	4			1	7-1438082-2	2LIT-14A464-TD-037	
			43	42							35											24			21		19							12							5	4			1	7-1438082-1	2LIT-14A464-TD-036	OBSOLETE
			43	42			39	38	37									28									19	18	17	16			13			10	9									7-1438082-0	2LIT-14A464-TD-035	OBSOLETE
			43	42			39	38	37									28									19	18	17	16						10	9									6-1438082-9	2LIT-14A464-TD-034	
		44		42				38												26																			7								6-1438082-8	2LIT-14A464-TD-033	OBSOLETE
			43	42			39	38	37					32				28									19	18	17	16			13			10	9									6-1438082-7	2LIT-14A464-TD-032	OBSOLETE
		44		42				38											27	26				22																						6-1438082-5	2LIT-14A464-TD-031	OBSOLETE
		44		42				38												26																										6-1438082-4	2LIT-14A464-TD-030	
			43	42				38	37					32													19	18	17	16						10	9									6-1438082-0	2LIT-14A464-TD-029	
			43	42			39	38	37					32													19	18	17	16			13			10	9									5-1438082-9	2LIT-14A464-TD-028	
			43	42				38	37					32													19	18	17	16						10	9									5-1438082-8	2LIT-14A464-TD-027	OBSOLETE
			43	42			39	38										28									19	18	17	16						10	9									5-1438082-7	2LIT-14A464-TD-026	
46	45		43									34	33	32	31				27					22	21	20	19	18		16	15	14	13	12		10	9	8	7						1	5-1438082-4	2LIT-14A464-TD-025	OBSOLETE
		44		42				38																																			3			5-1438082-3	2LIT-14A464-TD-024	OBSOLETE
						40	39				35	34													21			18		16	15		13				9	8	7							5-1438082-1	2LIT-14A464-TD-023	
46	45	44	43		41	40						34	33	32	31		29		27					22	21	20	19	18		16	15	14	13	12		10	9	8	7						1	4-1438082-6	2LIT-14A464-TD-022	
		44		42				38								30			27	26				22																						4-1438082-5	2LIT-14A464-TD-021	
		44		42				38								30																											3			4-1438082-4	2LIT-14A464-TD-020	
		44		42				38								30				26																										4-1438082-3	2LIT-14A464-TD-019	
46	45		43									34	33	32	31				27						21	20	19	18		16	15	14	13	12		10	9	8	7						1	4-1438082-1	2LIT-14A464-TD-018	
						40	39				35	34													21			18		16	15		13				9	8	7		5					3-1438082-9	2LIT-14A464-TD-017	
		44		42				38	37							30			27	26				22													9									2-1438082-8	2LIT-14A464-TD-016	
		44		42				38	37							30																					9									2-1438082-7	2LIT-14A464-TD-015	
		44		42				38	37							30				26																	9									2-1438082-6	2LIT-14A464-TD-014	
			43	42			39	38	37				33	32				28	27	26				22	21	20	19	18	17	16			13			10										2-1438082-4	2LIT-14A464-TD-013	
46	45	44	43									34	33	32	31				27					22	21	20	19	18			15	14	13	12		10	9	8	7						1	2-1438082-1	2LIT-14A464-TD-012	
46	45	44	43									34	33	32	31				27					22	21	20	19	18		16	15	14	13	12		10	9	8	7						1	2-1438082-0	2LIT-14A464-TD-011	
			43	42			39	38	37									28									19	18	17	16						10										1-1438082-7	2LIT-14A464-TD-010	
			43	42			39	38	37					32				28	27	26					21	20	19	18	17	16			13			10										1-1438082-6	2LIT-14A464-TD-009	
			43	42			39	38	37					32				28									19	18	17	16			13			10										1-1438082-5	2LIT-14A464-TD-008	
			43	42				38	37					32													19	18	17	16						10										1-1438082-4	2LIT-14A464-TD-007	
46	45	44	43									34	33	32	31				27					22	21	20	19	18			15	14	13	12		10	9	8	7						1	1-1438082-3	2LIT-14A464-TD-006	
46	45	44	43									34	33	32	31				27					22	21	20	19	18		16	15	14	13	12		10	9	8	7						1	1-1438082-2	2LIT-14A464-TD-005	
			43	42			39	38										28										18	17	16						10										1438082-9	2LIT-14A464-TD-004	
														32																																1438082-8	2LIT-14A464-TD-003	
												34	33	32	31				27					22	21	20	19	18		16	15	14	13	12		10	9	8	7						1	1438082-7	2LIT-14A464-TD-002	
												34	33	32	31				27					22	21	20	19	18			15	14	13	12		10	9	8	7						1	1-1438082-0	2LIT-14A464-TD-001	
																																														1438082-2	2LIT-14A464-TD-000	

TERMINAL HOLE POSITION

PIN-OUT CHART KEYING OPTION "B" (4)

THIS DRAWING IS A CONTROLLED DOCUMENT.

DIMENSIONS: mm

TOLERANCES UNLESS OTHERWISE SPECIFIED:
0 PLC ±-
1 PLC ±0.3
2 PLC ±0.10
3 PLC ±-
4 PLC ±-
ANGLES ±3°

MATERIAL: SEE TABLE -

FINISH: SEE TABLE -

DWN R. VESTAL 01AUG2003
CHK D. STRAUSSER 01AUG2003
APVD D. STRAUSSER 01AUG2003

PRODUCT SPEC -

APPLICATION SPEC -

WEIGHT -

TE Connectivity

NAME 46 WAY PCM CONNECTOR HARNESS ASSEMBLY

SIZE	CAGE CODE	DRAWING NO	RESTRICTED TO
A1	00779	C-1438082	

CUSTOMER DRAWING

SCALE 4:1 SHEET 4 OF 5 REV S12

4805 (3/13)

© 2020 TE Connectivity. All Rights Reserved.

REVISIONS					
P	LTR	DESCRIPTION	DATE	DWN	APVD
	-	SEE SHEET 1	-	-	-

46	45	44	43	42	41	40	39	38	37	36	35	34	33	32	31	30	29	28	27	26	25	24	23	22	21	20	19	18	17	16	15	14	13	12	11	10	9	8	7	6	5	4	3	2	1	PART NUMBER	FORD PART NUMBER	
	45	44	43	42	41			38											27								19												7		5					7-1438735-7	2LIT-14A464-TD-086	
		44		42				38											27																				7		5					7-1438735-6	2LIT-14A464-TD-085	
	45	44	43	42	41			38																			19												7		5	4				7-1438735-5	2LIT-14A464-TD-084	
		44		42				38																			19												7		5	4				7-1438735-4	2LIT-14A464-TD-083	
		44	43	42	41			38																															7		5	4				7-1438735-3	2LIT-14A464-TD-082	
		44		42				38											27					22															7		5	4				7-1438735-2	2LIT-14A464-TD-081	
		44		42				38																															7		5	4				7-1438735-1	2LIT-14A464-TD-080	
			43	42																26																			7	6		4	3			7-1438735-0	2LIT-14A464-TD-079	
																				26																			7	6			3			6-1438735-9	2LIT-14A464-TD-078	
		44	43	42																26							19												7	6		4				6-1438735-8	2LIT-14A464-TD-077	
	45	44	43	42	41			38																			19												7		5					6-1438735-6	2LIT-14A464-TD-076	
		44		42				38																			19												7		5					6-1438735-5	2LIT-14A464-TD-075	
		44	43	42	41			38																			19												7		5					6-1438735-4	2LIT-14A464-TD-074	
		44						38											27					22			19											8		6					6-1438735-0	2LIT-14A464-TD-073	OBSOLETE
		44						38											27					22			19											8	7	6					5-1438735-9	2LIT-14A464-TD-072	
		44																		26				22			19													6					5-1438735-8	2LIT-14A464-TD-071	
		44																		26				22			19												7	6					5-1438735-7	2LIT-14A464-TD-070	
		44						38											27	26				22			19													6					5-1438735-6	2LIT-14A464-TD-069	OBSOLETE
		44						38											27	26				22			19												7	6					5-1438735-5	2LIT-14A464-TD-068	OBSOLETE
		44																		26							19												7	6					5-1438735-4	2LIT-14A464-TD-067	
		44																		26							19													6					5-1438735-3	2LIT-14A464-TD-066	
			43	42																26																			7	6		4				5-1438735-2	2LIT-14A464-TD-065	
																				26																			7	6						5-1438735-1	2LIT-14A464-TD-064	
		44		42				38											27					22															7		5					4-1438735-6	2LIT-14A464-TD-063	
		44		42				38																															7		5					4-1438735-5	2LIT-14A464-TD-062	OBSOLETE
		44		42				38											27	26				22			19										8		6					4-1438735-4	2LIT-14A464-TD-061	
		44		42				38											27	26				22			19										8	7	6					4-1438735-3	2LIT-14A464-TD-060	
		44																		26							19										8	7	6					4-1438735-2	2LIT-14A464-TD-059	
		44																		26							19										8		6					4-1438735-1	2LIT-14A464-TD-058	
			43	42																26																	8	7	6	5				4-1438735-0	2LIT-14A464-TD-057	
																				26																	8	7	6					3-1438735-9	2LIT-14A464-TD-056	
46	45	44	43									34	33	32	31				27		25					20				16		14	13	12		10	9	8	7	6					1	3-1438735-4	2LIT-14A464-TD-055	OBSOLETE
46	45		43									34	33	32	31				27		25					20				16		14	13	12		10	9	8	7	6					1	2-1438735-7	2LIT-14A464-TD-054	
46	45	44	43	42		40					35	34	33	32	31			28				24			21		19							12			9				5	4			1	2-1438735-3	2LIT-14A464-TD-053	OBSOLETE
	45	44	43	42		40							33	32	31			28							21		19										9				5	4				2-1438735-2	2LIT-14A464-TD-052	
		44		42				38											27	26				22															7		5					1438735-7	2LIT-14A464-TD-051	
						40	39	38			35	34										24			21			18					13	12			9	8	7		5					1438735-6	2LIT-14A464-TD-050	
		44		42				38											27	26				22																	5					1438735-5	2LIT-14A464-TD-049	OBSOLETE
		44		42				38												26				22																	5					1438735-4	2LIT-14A464-TD-048	
		44		42				38												26																			7		5					1438735-3	2LIT-14A464-TD-047	
		44		42				38												26																					5					1438735-2	2LIT-14A464-TD-046	
		44						38									29	28		26																			7				3			1438735-1	2LIT-14A464-TD-045	

TERMINAL HOLE POSITION

PIN-OUT CHART KEYING OPTION "B" (4)

THIS DRAWING IS A CONTROLLED DOCUMENT.

DIMENSIONS: mm

TOLERANCES UNLESS OTHERWISE SPECIFIED:
0 PLC ±-
1 PLC ±0.3
2 PLC ±0.10
3 PLC ±-
4 PLC ±-
ANGLES ±3°

MATERIAL: SEE TABLE -

FINISH: SEE TABLE -

DWN R. VESTAL 01AUG2003
CHK D. STRAUSSER 01AUG2003
APVD D. STRAUSSER 01AUG2003

PRODUCT SPEC -

APPLICATION SPEC -

WEIGHT -

TE Connectivity

NAME 46 WAY PCM CONNECTOR HARNESS ASSEMBLY

SIZE	CAGE CODE	DRAWING NO	RESTRICTED TO
A1	00779	C-1438082	

CUSTOMER DRAWING

SCALE 4:1 | SHEET 5 OF 5 | REV S12

4805 (3/13)

Mouser Electronics

Authorized Distributor

Click to View Pricing, Inventory, Delivery & Lifecycle Information:

TE Connectivity:

5-1438735-7