THIS DRAWING IS UNPUBLISHED. RELEASED FOR PUBLICATION 2003
© COPYRIGHT 2003 BY - ALL RIGHTS RESERVED.

REVISIONS

P	LTR	DESCRIPTION	DATE	DWN	APVD
	A	EGA0-0352-036	14OCT2003	JJ	HW
	A1	EGA0-0621-03	22OCT2003	JJ	HW
	A2	ECR-05-007181	18JUL2005	JJ	W St
	A3	DRAWING UPDATED. NEW TE LOGO. ECR-15-002468	12MAY2015	Abr	Brun

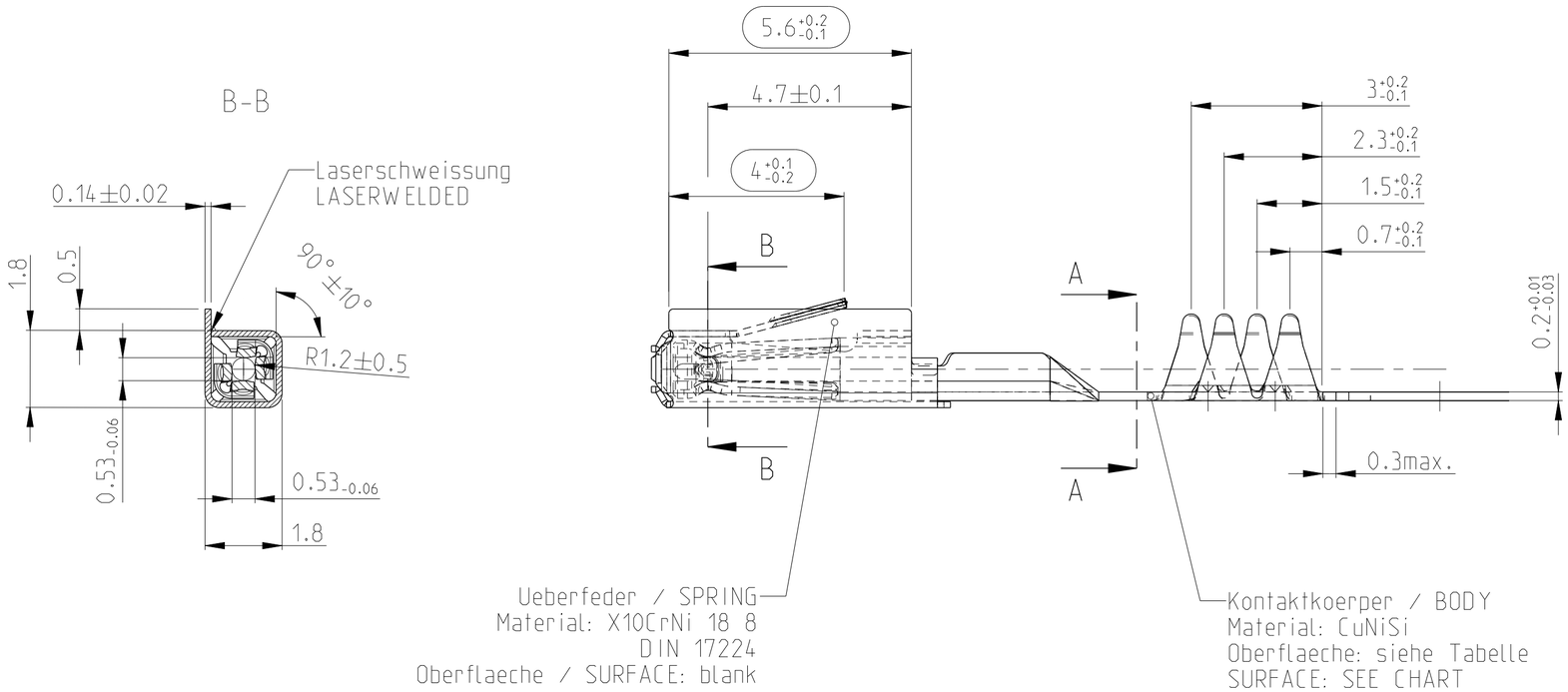

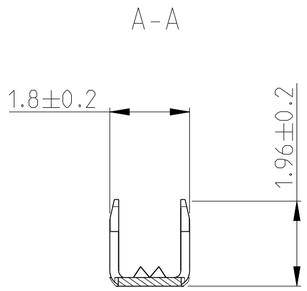

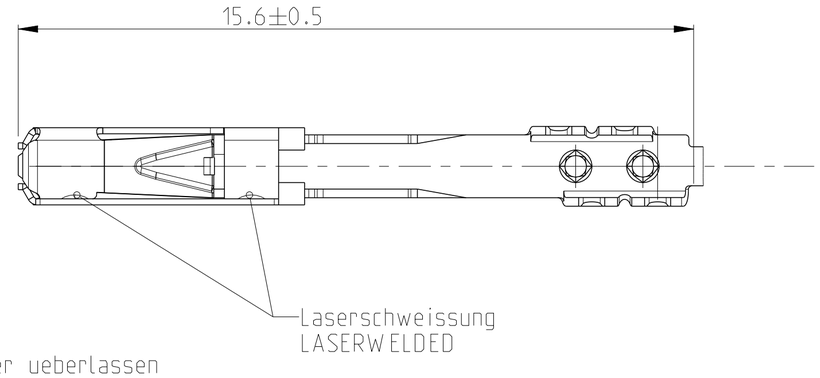

Bemerkungen
NOTES

-
-

1 Einzelheiten der Ausfuehrung bleiben dem Hersteller ueberlassen
DETAILS OF DESIGN ARE LEFT TO MANUFACTURER

2 Passend zu Stiftkontakt siehe Zeichnung: PN: 929453
SUITABLE FOR PIN CONTACT SEE DRAWING:

-
-

Sn: verzinnte Ausfuehrung
TINNED

Kontaktkoerper: 0.8-2 µm Sn
BODY: 0.8-2 µm Sn

1418887-1	A1	1418930-1	Sn	0.1
Bestell-Nr.: ORDER-NO.	Rev.	Einzelausfuehrung LOOSE PIECE ORDER NO	Oberfläche SURFACE	Gewicht WEIGHT (g)

THIS DRAWING IS A CONTROLLED DOCUMENT.

DIMENSIONS: mm

TOLERANCES UNLESS OTHERWISE SPECIFIED: DIN 6930-m
0 PLC ±-
1 PLC ±-
2 PLC ±-
3 PLC ±-
4 PLC ±-
ANGLES ±1°

MATERIAL - -
FINISH - -

DWN J.Jauris 14OCT2003
CHK H.Wendling 22OCT2003
APVD -
PRODUCT SPEC -
APPLICATION SPEC -
WEIGHT -

TE Connectivity

NAME
MQS-CONTACT WITH NEW FFC-CRIMP
MQS-BUKO mit neuem FFC-Crimp
Extr.-Folie

SIZE	CAGE CODE	DRAWING NO	RESTRICTED TO
A2	-	C-1418887	-

Customer Drawing | SCALE 10:1 | SHEET 1 OF 1 | REV A3

1471-9 (3/13)

Mouser Electronics

Authorized Distributor

Click to View Pricing, Inventory, Delivery & Lifecycle Information:

TE Connectivity:

1418887-1