THIS DRAWING IS UNPUBLISHED. RELEASED FOR PUBLICATION 20
© COPYRIGHT 20 BY - ALL RIGHTS RESERVED.

LOC	DIST
AI	-

REVISIONS

P	LTR	DESCRIPTION	DATE	DWN	APVD
	B8	SERRATION VIEWS ARE ADDED	19MAY2017	JJH	JP
	B9	CORRECTED PN'S TABLE BY ADDING PN 964332-5	23AUG2017	GH	JC
	B10	ADDED REFERENCE TO SMBT CRIMP HEIGHT	12JAN2018	JP	JC
	B11	CORRECTED TEXT IN SECTION B-B	30JAN2019	JJH	JC

CONTACTS FOR FLR AND FLK CABLES
Kontakte fuer flr und FLK-Leitung

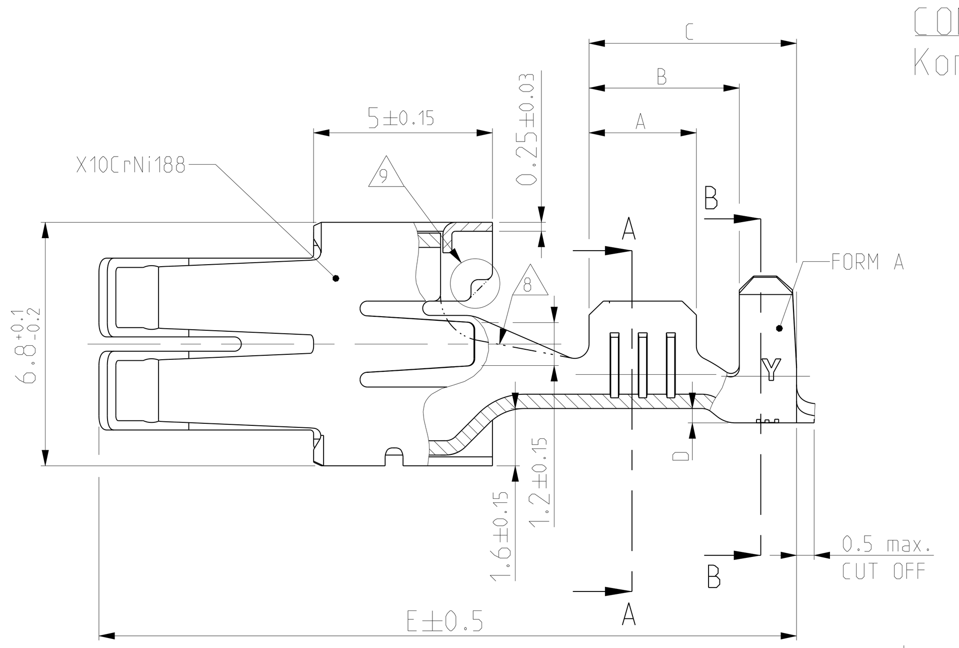

SERRATION DESIGN - 3

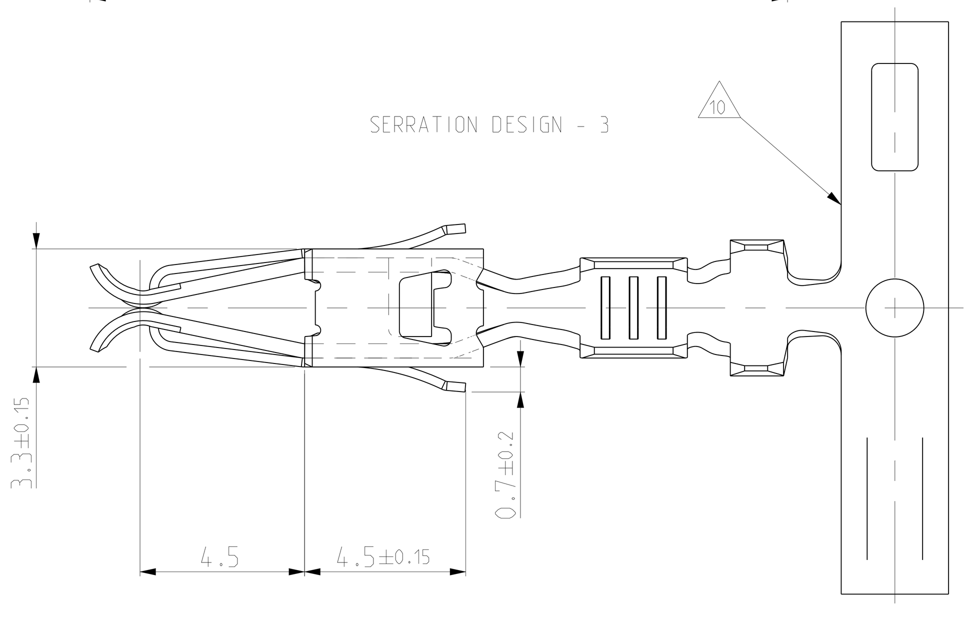

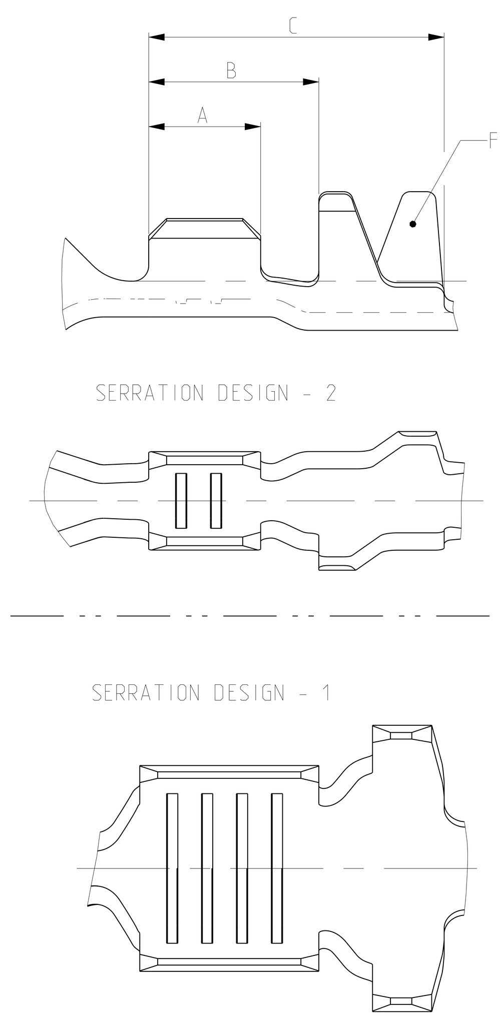

SERRATION DESIGN - 2

SERRATION DESIGN - 1

CONTACTS FOR SINGLE WIRE SEALING SYSTEM: FLR- AND FLK- CABLE
Kontakte fuer Einzel - Dichtung - System: FLR- UND FLK - Leitung

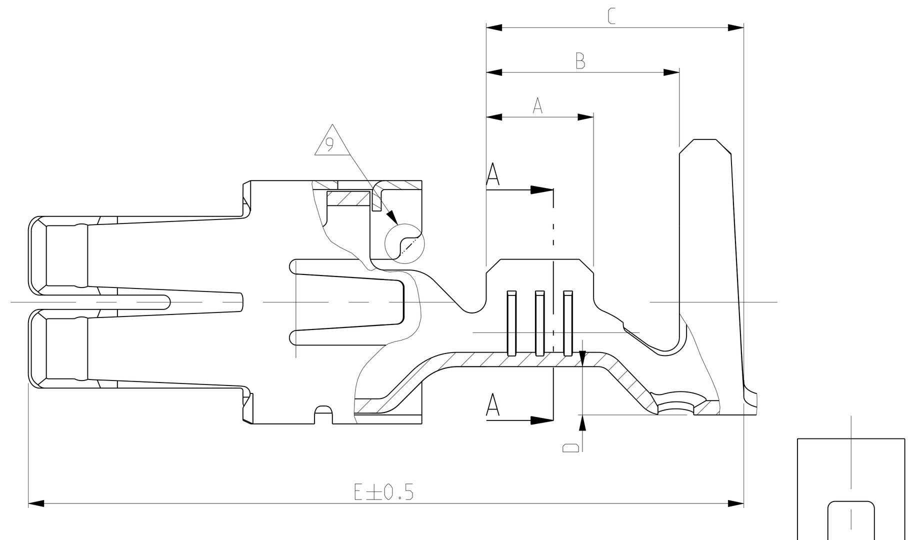

SERRATION DESIGN - 3

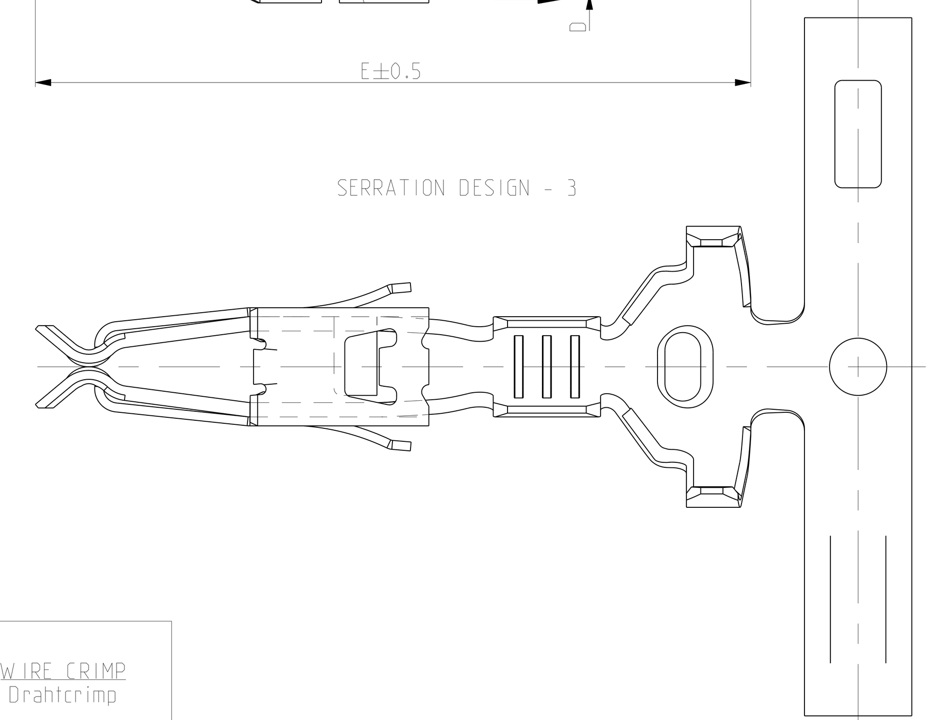

SERRATION DESIGN - 1

ONLY FOR PN: 968035, 968037 and 1670426
Nur fuer PN:

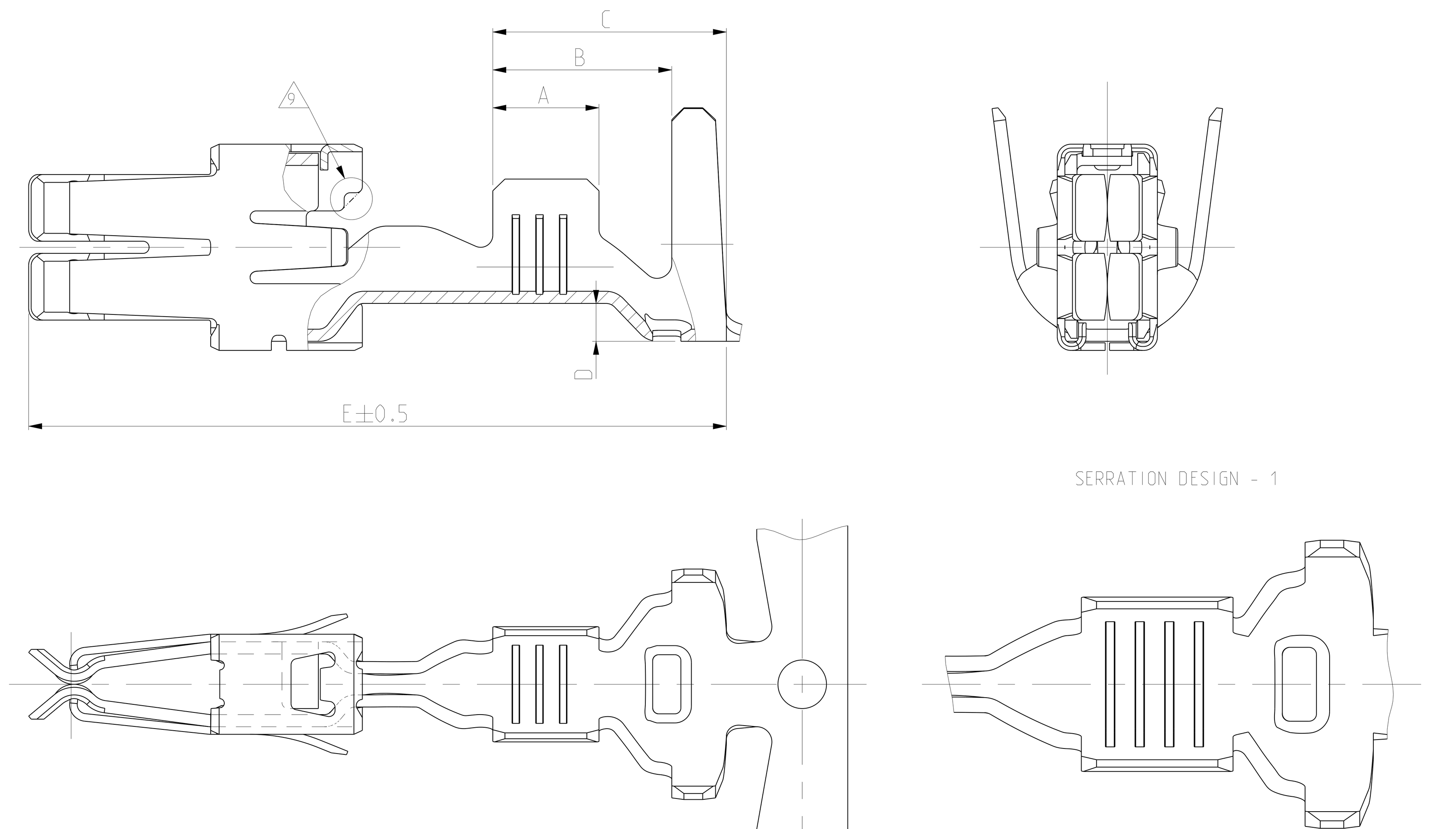

SERRATION DESIGN - 1

DIMENSIONS SEE FIGURE CONTACTS FOR FLR - CABLE
Masse siehe Darstellung der Kontakte fuer FLR -Leitung

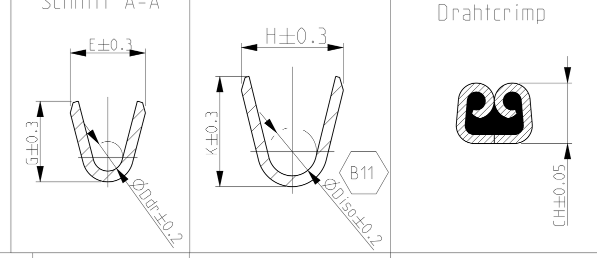

ONLY FOR PIN : 964330 , 964332 , 964334 , 968035 and 968037
Nur fuer PN:

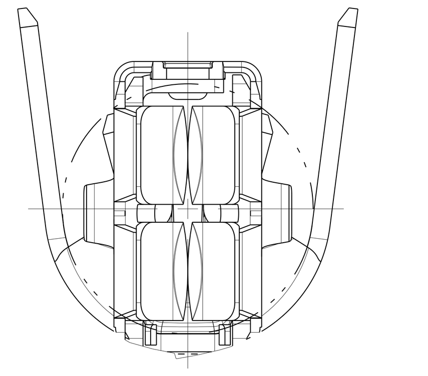

CARRIERSTRIP
Traegerstreifen

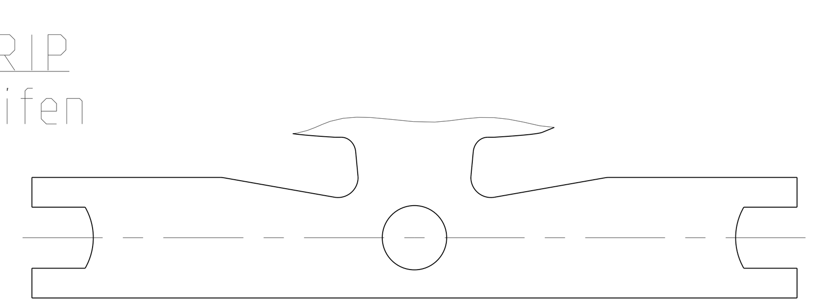

TE Connectivity ORDER - NO STRIP FORM Bandware (SERRATION DESIGN - 1)	REV	TE Connectivity ORDER - NO STRIP FORM Bandware (SERRATION DESIGN - 2)	REV	TE Connectivity ORDER - NO STRIP FORM Bandware (SERRATION DESIGN - 3)	REV	WIRE RANGE Drahtgroessen Bereich (mm²)	INSULATION Ø Isolations Ø (mm)	MATERIAL Werkstoff	SURFACE Oberflaeche	LENGTH Laenge	WIRE CRIMP Drahtcrimp	INSULATION CRIMP Isolationscrimp	CRIMP HEIGHT (CH) Crimp - Hoehe		ORDER- NO. Bestell-Nr EXTRACTION TOOL Ausdrueckwerkzeug	CRIMP DATA AND CRIMP TOOL Crimpdaten u. Crimpwerkzeuge
-	-	-	-	-	-	>4.0 - 6.0 INCL. AWG 10	>3.6 - 5.1 6.0 (SEAL)	-	-	A=4.30 B=6.50 C=8.30 D=1.45 E=20.0	E =5.30 G =5.60 D_{Dr} =2.90	H =8.15 K =8.00 D_{ISO} =6.00	5.00mm² = 2.36 6.00mm² = 2.55 PRELIMINARY vorlaeufig	SINGLE WIRE SEALING SYSTEM 1 EDS	968107-1	SEE APPLICATION SPECIFICATION siehe Verarbeitungsspezifikation 114 - 18037
-	-	-	-	-	-			-	-							
11 ~~1-1670426-6~~	~~D~~	-	-	-	-			CuNiSi	7							
2-968037-4	B	-	-	-	-	>2.5 - 4.0	3.4 - 3.7	CuSn4	5	A=4.00 B=5.90 C=7.70 D=1.25 E=23.0	E =4.60 G =4.80 D_{Dr} =2.40	H =7.60 K =7.70 D_{ISO} =5.60	4.00mm² = 2.35 3.00mm² = 2.13			
1-968037-4	B	-	-	-	-			CuFe2	sel. Gold 3							
0-968037-2	B	-	-	-	-			CuSn4	vorverzinnt							
-	-	-	-	2-968035-4	B	>1.0 - 2.5	2.7 - 3.7	CuSn4	5	A=3.50 B=5.90 C=7.70 D=1.25 E=23.0	E =3.80 G =4.10 D_{Dr} =1.60	H =7.60 K =7.70 D_{ISO} =5.60	1.50mm² = 1.76 2.00mm² = 1.90 2.50mm² = 2.04			
-	-	-	-	-	-			-	-							
-	-	-	-	0-968035-2	B			CuSn4	vorverzinnt							
-	-	-	-	-	-	>2.5 - 4.0	3.4 - 4.5	-	-	A=4.00 B=5.90 C=7.70 D=1.25 E=20.0	E =4.60 G =4.80 D_{Dr} =2.40	H =7.80 K =7.80 D_{ISO} =5.70	3.00mm² = 2.13 4.00mm² = 2.35			
1-964334-5	B	-	-	-	-			CuFe2	6							
1-964334-1	B	-	-	-	-			CuFe2	vorverzinnt							
-	-	-	-	1-964332-5	B	>1.0 - 2.5	2.2 - 3.7	CuFe2	6	A=3.50 B=5.90 C=7.70 D=1.25 E=20.0	E =3.80 G =4.00 D_{Dr} =1.70	H =7.80 K =7.80 D_{ISO} =5.70	12 1.50mm² = 1.76 2.00mm² = 1.90 2.50mm² = 2.04			
-	-	-	-	964332-5	B			CuFe2	4							
-	-	-	-	1-964332-2	B			CuFe2	sel. Gold 3							
-	-	-	-	1-964332-1	B			CuFe2	vorverzinnt							
-	-	-	-	-	-	0.5 - 1.0	1.4 - 2.7	-	-	A=3.00 B=5.40 C=7.20 D=1.25 E=20.0	E =2.80 G =3.00 D_{Dr} =1.10	H =7.70 K =7.70 D_{ISO} =5.50	12 0.50mm² = 1.43 0.75mm² = 1.52 1.00mm² = 1.61			
-	-	-	-	1-964330-2	B			CuFe2	sel. Gold 3							
-	-	-	-	1-964330-1	B			CuFe2	vorverzinnt							
1-969044-5	B	-	-	-	-	> 2.5 - 4.0	3.4 - 4.5	CuFe2	6	A=4.00 B=5.90 C=7.70 D=1.45 E=20.0	E =4.60 G =4.80 D_{Dr} =2.40	H =8.15 K =8.00 D_{ISO} =6.00	12 4.00mm² = 2.35 - -			
969044-5	B	-	-	-	-			CuFe2	4							
969044-1	B	-	-	-	-			CuFe2	vorverzinnt							
-	-	-	-	-	-	> 1.0 - 2.5	2.2 - 3.7	-	-	A=3.50 B=5.90 C=7.70 D=1.45 E=20.0	E =3.80 G =4.00 D_{Dr} =1.70	H =8.15 K =8.00 D_{ISO} =5.70	12 2.50mm² = 2.04 2.00mm² = 1.90 1.50mm² = 1.76			
-	-		-	-	-			-	-							
-	-	-	-	969042-1	B			CuFe2	vorverzinnt							
-	-	-	-	-	-	0.5 - 1.0	1.4 - 2.7	-	-	A=3.00 B=5.40 C=7.20 D=1.35 E=20.0	E =2.80 G =3.00 D_{Dr} =1.10	H =7.85 K =7.70 D_{ISO} =5.50	12 1.00mm² = 1.61 0.75mm² = 1.52 0.50mm² = 1.43			
-	-	-	-	-	-			-	-							
-	-	-	-	969040-1	B			CuFe2	vorverzinnt							
-	-	-	-	-	-	> 2.5 - 4.0	3.3 - 4.5	-	-	A=4.00 B=5.20 C=6.80 D=0.60 E=19.50	E =4.60 G =4.80 D_{Dr} =2.40	H =6.40 K =6.70 D_{ISO} =4.00 FORM A	12 3.00mm² = 2.13 3.50mm² = 2.24 4.00mm² = 2.35	FLR / FLK		
964328-5	B	-	-	-	-			CuFe2	4							
964328-1	B	-	-	-	-			CuFe2	vorverzinnt							
-	-	-	-	964326-5	C	>1.0 - 2.5	2.2 - 3.0	CuFe2	4	A=3.50 B=4.70 C=6.30 D=0.40 E=19.50	E =3.80 G =4.00 D_{Dr} =1.70	H =4.70 K =4.90 D_{ISO} =2.60 FORM A	12 1.50mm² = 1.76 2.00mm² = 1.90 2.50mm² = 2.04	FLR - CABLE / Leitung		
-	-	-	-	-	-			-	-							
-	-	-	-	964326-1	C			CuFe2	vorverzinnt							
-	-	-	-	-	-	0.5 - 1.0	1.4 - 2.1	-	-	A=3.00 B=4.20 C=5.80 D=0.40 E=19.50	E =2.80 G =3.00 D_{Dr} =1.10	H =3.80 K =4.10 D_{ISO} =1.80 FORM A	12 0.50mm² = 1.43 0.75mm² = 1.52 1.00mm² = 1.61			
-	-	-	-	-	-			-	-							
-	-	-	-	964324-1	B			CuFe2	vorverzinnt							
-	-	-	-	-	-	0.2 - 0.5	1.15 - 1.6	-	-	A=2.50 B=3.80 C=6.60 D=0.30 E=19.50	E =2.20 G =2.20 D_{Dr} =0.80	H =3.10 K =3.10 D_{ISO} =1.40 FORM B	0.20mm² = 1.13 0.25mm² = 1.15 0.35mm² = 1.19 0.50mm² = 1.26			
-	-	-	-	-	-			-	-							
-	-	964322-1	B	-	-			CuFe2	vorverzinnt							
											STRIP FORM / Bandware					
										CRIMP DIMENSIONS / Crimpabmessungen (mm)						

1. ACCORDING INSULATION Ø IS TO CHOOSE THE SINGLE WIRE SEAL
ATTENTION: DIFFERENT HOUSING CAVITY DIAMETER ARE POSSIBLE.
PLEASE NOTICE APPROPRIATE HOUSING PRODUCT SPECIFICATION !
Entsprechend dem isolationsdurchmesser ist die
Einzel- Dichtung auszuwaehlen
Achtung: Verschiedene Gehaeuse- kammer- Durchmesser moeglich.
Bitte entsprechende Gehaeuse- Product- Spezifikation beachtem !

2. ADDITIONAL CUSTOMER-SPECIFIC SEAL EXISTING
Weitere kundenspezifische Einzeldichtung vorhanden

3. BODY ELECTRO TIN PLATED OVER NICKEL 0.2 µm min.
Kontaktkoerper : gal. verzinnt ueber Nickel 0.2 µm min.
CONTACT AREA SELECTIVE GOLD OVER NICKEL 0.8 µm min.
Kontaktzone: selektiv vergoldet ueber Ni 0.8 µm min.

WIRE CRIMP AREA ELECTRO TIN PLATED OVER NICKEL 1.0 µm min.
Draht crimpbereich galv. verzinnt ueber Nickel 1.0 µm min.

4. CONTACT ZONE SELECTIVE PRE SILVER PLATED MIN. 1-1.5 µm
Kontaktzone selektiv vorversilbert min. 1-1.5 µm

5. CONTACT BODY ELECTRO TIN LATED OVER NICKEL 0.2 µm min.
kontaktkoerper : gal. verzinnt ueber Nickel 0.2 µm min.
TOUCHING AREA TO CANTILEVER SPRING
SELECTIVE AU PLATED OVER NICKEL 0.8 µm min.
Anlageflaeche zur Ueberfeder Kontaktzone
selektiv Au ueber Ni beschichtet 0.8 µm min
CANTILEVER SPRING: COMPLETLY AU PLATED 0.6 µm min.
Ueberfeder: komplett Au beschichtet 0.6 µm min.

6. CONTACT ZONE SELECTIVE PRE SILVER PLATED MIN. 3- 4.5 µm
Kontaktzone selektiv vorversilbert min. 3- 4.5 µm

7. 1-3 µm Sn28M LAYER FOR HIGHER TEMPERATURE REQUIREMENTS
1-3 µm Sn28M Schicht fuer Hoehere Temperaturanforderungen

8. TRANSITION ONLY FOR PN 964325 AND 964326
Uebergang nur fuer PN 964325 und 964326

9. DOTTED LINE IS ALTERNATIVE SHAPE
Gestrichelte Linie alternative Form

10. THICKNESS OF MATERIAL 0.4±0.03 mm
Materialstaerke 0.4±0.03 mm

11. OBSOLETE

12. SEE APPLICATION SPEC. FOR PREFERRED STANDARD TO MEET NEW REQUIREMENT @LV214-2 SLOW MOTION BENDING TEST
Siehe Verarbeitungs Spezifikation fuer bevorzugten Standard um den neuen Anforderungen der LV214-2 Slow Motion Pruefung zu genuegen

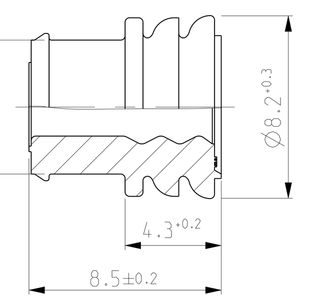

SINGLE WIRE SEAL Einzel - Dichtung 1		
963245-1	3.4 - 3.7	YELLOW gelb
963244-1	2.2 - 3.0	WHITE weiss
963243-1	1.2 - 2.1	BLUE blau
100132-1	DEAD END PLUG	BLACK schwarz
967011-1	3.6 - 4.3	GREEN gruen
968043-1	4.3 - 5.1	RED rot
ORDER-NO. Bestell-Nr	INSULATION Ø Isolations Ø	COLOUR Farbe

THIS DRAWING IS A CONTROLLED DOCUMENT.

DWN	M.PFEILSCHIFTER 18MAY2000
CHK	V.HUHN 18MAY2000
APVD	M.BLEICHER 18MAY2000
PRODUCT SPEC	108-18025
APPLICATION SPEC	114-18037
WEIGHT	-
DIMENSIONS	mm
TOLERANCES UNLESS OTHERWISE SPECIFIED	0 PLC ±0.2mm; 1 PLC ±; 2 PLC ±; 3 PLC ±; 4 PLC ±; ANGLES ±
MATERIAL	SEE TABLE -
FINISH	- -

TE Connectivity

NAME: STANDARD POWER TIMER CONTACT TYP A
-

SIZE	CAGE CODE	DRAWING NO	RESTRICTED TO
A0	-	C-1355049	-

CUSTOMER DRAWING | SCALE 10:1 | SHEET 1 OF 1 | REV B11

Mouser Electronics

Authorized Distributor

Click to View Pricing, Inventory, Delivery & Lifecycle Information:

TE Connectivity:
968035-2