THIS DRAWING IS UNPUBLISHED. RELEASED FOR PUBLICATION NOV ,2005.
© COPYRIGHT 2005 By – ALL RIGHTS RESERVED.

LOC	DIST
E	B

REVISIONS

P	LTR	DESCRIPTION	DATE	DWN	APVD
	D	ECR–14–010815	18JUL2014	RZ	MY

NOTES:

1. PACKAGE ONE COMPLETE CONNECTOR IN HEAT SEALED, LABELED BAG/ 125 PCS PER SHIPPING BOX. LABELED PER TEC–107–115.
2. 100 TRAY PACK IN ACCORDANCE WITH AMP SPEC 107–3275
3. Au PLATING
4. Ni PLATING
5. THIS ITEM MUST BE WHITE
6. HAND TOOL : 9–1478240–0
7. DIE SET : 9–1478242–0
8. ELECTRICAL CHARACTERISTICS
   - FREQUENCY RANGE: DC – 2 GHz
   - NOMINAL IMPEDANCE: 75 Ohm
   - INSULATION RESISTANCE: 5000 MOhm
   - WORKING VOLTAGE: 500 Volts RMS at Sea Level
   - DIELECTRIC WITHSTAND VOLTAGE: 1500 Volts RMS Max
   - CONTACT RESISTANCE:
     - CENTER CONTACT: 1.50 mOhm Max
     - OUTER CONTACT: 1.00 mOhm Max
   - VSWR @ 2GHz: 1.20:1 Max
   - INSERTION LOSS dB @ x 2 GHz: 0.20 Max
9. MECHANICAL CHARACTERISTICS
   - CABLE RETENTION FORCE: 170N Min
   - MOUNT NUT RECOMMENDED TORQUE: 4 Nm
   - DURABILITY: 500 Cycles Min
10. ENVIRONMENTAL CHARACTERISTICS
   - OPERATING TEMPERATURE: –65 to +165 DegC

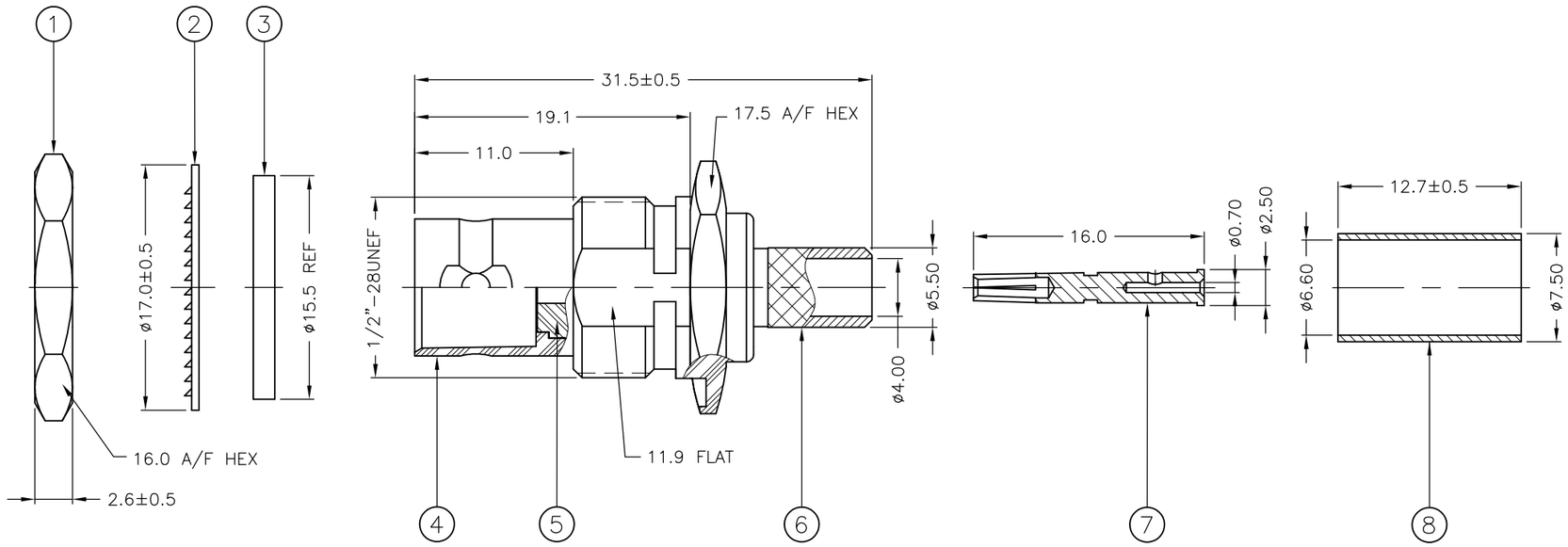

RECOMMENDED CENTRE CONTACT A/F HEX

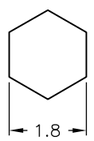

RECOMMENDED CRIMP SLEEVE A/F HEX

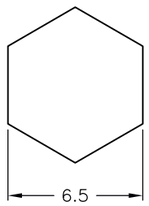

RECOMMENDED CABLE STRIPPING DIM'S

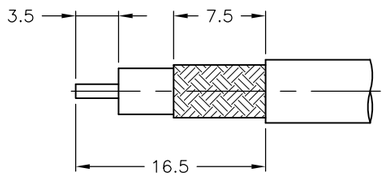

RECOMMENDED PANEL LAYOUT

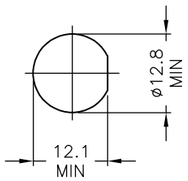

QUANTITY PER ASSY				PARTS LIST		
		1	1	BRASS 4	FERRULE	8
		1	1	PHOSPHOR BRONZE 3	CONTACT	7
		1	1	BRASS 4	CHASSIS	6
		1	1	PTFE	INSULATION	5
		1	1	BRASS 4	BODY	4
		1	1	SILICON RUBBER 5	GASKET	3
		1	1	PHOSPHOR BRONZE 4	LOCKWASHER	2
		1	1	BRASS 4	HEX NUT	1
		6--0	1--0	MATERIAL	DESCRIPTION	ITEM
		2	1			

THIS DRAWING IS A CONTROLLED DOCUMENT.

DIMENSIONS: mm

TOLERANCES UNLESS OTHERWISE SPECIFIED:

0 PLC	± –
1 PLC	± 0.2
2 PLC	± 0.1
3 PLC	± –
4 PLC	± –
ANGLES	± –

MATERIAL: SEE TABLE

FINISH: –

DWN J.SANDWELL 23NOV05
CHK S.PARLOW 23NOV05
APVD F.WHEELER–KING 23NOV05
PRODUCT SPEC 108–112000
APPLICATION SPEC 411–3247
WEIGHT –

TE Connectivity

NAME: BNC BULKHEAD JACK REAR MOUNT CRIMP 75 OHM RG59B/U, 62A/U, 140/U, 210/U, URM90, KX6A, KX25, KX52, KX53

SIZE	CAGE CODE	DRAWING NO	RESTRICTED TO
A3	00779	C–1337435	–

CUSTOMER DRAWING | SCALE NTS | SHEET 1 OF 1 | REV D

1470–19 (3/11)

Mouser Electronics

Authorized Distributor

Click to View Pricing, Inventory, Delivery & Lifecycle Information:

TE Connectivity:

1-1337435-0