THIS DRAWING IS UNPUBLISHED. RELEASED FOR PUBLICATION 20
© COPYRIGHT 20 BY TYCO ELECTRONICS CORPORATION. ALL RIGHTS RESERVED.

LOC	DIST
A	66

REVISIONS

P	LTR	DESCRIPTION	DATE	DWN	APVD
	A	RELEASED	04NOV2011	LG	GB
	A1	ECR-15-018756	30DEC2015	JH	CT
	B	ECR-18-006525	03MAY2018	YY	JDG
	C	ECR-19-010789	10JUL2019	FJ	TE

PART NUMBER	REVISION	DESCRIPTION	FEED TYPE
2151015-1	B	FINE CRIMP HEIGHT ADJUST	MECHANICAL
2151015-2	C	FINE CRIMP HEIGHT ADJUST	PNEUMATIC
7-2151015-1	B	MECHANICAL AND CRIMP TOOLING KIT	MECHANICAL
7-2151015-2	C	PNEUMATIC AND CRIMP TOOLING KIT	PNEUMATIC
7-2151015-7	A	CRIMP TOOLING KIT	-

ATLANTIC VERSION TERMINATOR INTERFACE ADAPTER

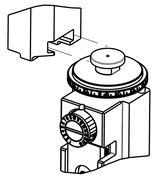

APPLICATOR DATA		
CRIMP	SIZE	TYPE
WIRE	1.58 mm [.062]	F
INSUL	3.18 mm [.125]	F
APPLICATOR INSTRUCTIONS 408-35042		

TERMINAL DATA: MOLEX TERMINAL	MOLEX CRIMP SPECIFICATION
TERMINAL NAME: 4.2mm PITCH MINI-FIT TERMINAL	
WIRE STRIP LENGTH 3.00-3.50 mm [.118-.138 IN]	INSULATION DIAMETER RANGE ∅2.50-2.95 mm [.098-.116 IN]
TERMINAL APPLICATION SPECIFICATION	MOLEX 63900-2600 REV J - - - - -

TERMINALS APPLIED

TE TERMINAL	MOLEX TERMINAL	TE TERMINAL	MOLEX TERMINAL
286603-1	39-00-0038	286611-1	39-00-0040
286603-2	39-00-0055	286611-2	39-00-0061
286603-3	39-00-0207	286611-3	39-00-0053
286603-4	39-00-0163	286611-4	39-00-0120
286603-5	39-00-0059	286611-5	39-00-0126
286603-6	39-00-0153	286611-6	39-00-0219
286603-7	39-00-0181	286611-8	39-00-0411
286603-8	39-00-0213	286611-9	39-00-0430
1-286603-0	44485-1211	1-286611-1	39-00-0121
1-286603-1	39-00-0114	1-286611-2	39-00-0420
1-286603-2	39-00-0428	1-286611-3	39-00-0437
1-286603-3	39-00-0419	1-286611-4	39-00-0426
1-286603-4	39-00-0425	1-286611-6	39-00-0075
1-286603-5	39-00-0436	1-286611-7	39-00-0427
1-286603-6	39-00-0440	1-286611-8	40-13-0853
1-286603-7	39-00-0073	2-286611-0	30490-1002
1-286603-8	39-00-0108	2-286611-1	30490-2002
1-286603-9	39-00-0169	2-286611-2	40-01-0853
2-286603-0	39-00-0175	2-286611-3	98-00-0174
2-286603-1	39-00-0194	2-286611-4	30490-0002
2-286603-2	39-00-0200		
2-286603-3	39-00-0405		
2-286603-4	39-00-0407		
2-286603-5	39-00-0410		
2-286603-6	40-13-0851		
2-286603-8	44485-1311		
2-286603-9	44485-1411		

WIRE SIZE	CRIMP HEIGHT mm [INCH]	CRIMP HEIGHT REFERENCE SETTING (4)
0.80mm2	1.02+/-0.05 [.040+/-.002]	5.9
18 AWG	1.02+/-0.05 [.040+/-.002]	5.9
0.50mm2	0.995+/-0.045 [.039+/-.0018]	6.2
20 AWG	0.995+/-0.045 [.039+/-.0018]	6.2
0.35mm2	0.895+/-0.045 [.035+/-.0018]	7.1
22 AWG	0.895+/-0.045 [.035+/-.0018]	7.1
0.20mm2	0.83+/-0.04 [.033+/-.0016]	7.7
24 AWG	0.83+/-0.04 [.033+/-.0016]	7.7

TERMINAL DATA: MOLEX TERMINAL	CMOLEX CRIMP SPECIFICATION
TERMINAL NAME: 4.2mm PITCH MINI-FIT TERMINAL	
WIRE STRIP LENGTH 3.00-3.50 mm [.118-.138 IN]	INSULATION DIAMETER RANGE ∅2.50-2.95 mm [.098-.116 IN]
TERMINAL APPLICATION SPECIFICATION	MOLEX 63900-2600 REV J

TERMINALS APPLIED

TE TERMINAL	MOLEX TERMINAL	TE TERMINAL	MOLEX TERMINAL
286603-9	44476-1111	1-2113022-1	46083-1211
2-286603-7	44476-1211	1-2113022-2	46083-1221
286611-7	44478-1111	1-2113022-3	46134-1111
1-286611-9	44478-1211	1-2113022-4	46134-1121
2113022-1	45750-1211	1-2113022-5	46134-1211
2113022-2	45750-1111	1-2113022-6	46134-1221
2113022-3	46012-1111		
2113022-4	46018-1541		
2113022-5	46083-1111		
2113022-6	46098-1541		
2113022-7	46012-1141		
2113022-8	46012-1211		
2113022-9	46012-1241		
1-2113022-0	46083-1121		

WIRE SIZE	CRIMP HEIGHT mm [INCH]	CRIMP HEIGHT REFERENCE SETTING (4)
0.80mm2	1.02+/-0.05 [.040+/-.002]	5.9
18 AWG	1.02+/-0.05 [.040+/-.002]	5.9
0.50mm2	0.995+/-0.045 [.039+/-.0018]	6.2
20 AWG	0.995+/-0.045 [.039+/-.0018]	6.2

*WARNING
ON INSTALLATION, SET WIRE DISC TO CRIMP HEIGHT REFERENCE SETTING FOR LARGEST WIRE SIZE. CRIMP HEIGHT REFERENCE SETTINGS GREATER THAN THE VALUE SHOWN MAY CAUSE DAMAGE TO THE CRIMP TOOLING, REFER TO THE INSTRUCTION SHEET FOR PROPER SETUP AND ADJUSTMENTS.

(1) RECOMMENDED SPARE PARTS

(2) REFER TO SUPPLIED INSTRUCTION SHEET FOR CLEANING, LUBRICATION AND STORAGE OF APPLICATOR.

(3) APPLY PART NUMBER 2-23419-6 LOCTITE TO THREADS OF ITEM 242.

(4) CRIMP HEIGHT REFERENCE SETTING WAS THE SETTING USED WHEN THE APPLICATOR WAS QUALIFIED AT THE FACTORY. ADJUSTMENT MAY BE NECESSARY WHEN RUNNING APPLICATOR IN THE FIELD.

5. UNLESS SPECIFIED OTHERWISE TORQUE VALUES SHALL BE USED PER DOCUMENT, 101-35000.

					PART NO	DESCRIPTION	ITEM NO
-	1	-	1	-	2119641-1	FEED CAM, AIR FEED	248
-	1	1	1	1	2119082-9	CAM, SNAIL, INSULATION ADJUSTMENT	244
-	1	1	1	1	2079764-1	WASHER, WAVE SPRING, CREST-TO-CREST	243
(3) -	1	1	1	1	2119083-1	RETAINER, INSULATION DIAL	242
-	1	1	1	1	18023-1	SCR, SKT HD CAP M3 X 5.0	241
-	-	1	-	1	2119580-1	MECHANICAL FEED ASSEMBLY	239
-	1	-	1	-	2844940-1	AIR FEED MODULE	238
-	REF	REF	REF	REF	994970-2	COUNTER, MAGNETIC	164
-	1	1	1	1	1-18028-2	WASHER, FLAT, REG M4	119
-	1	1	1	1	2844908-1	SCREW, LOCKING	99
-	1	1	1	1	2844907-1	POST, LOCKING	98
-	1	1	1	1	455888-9	SPACER, CRIMPER	82
-	1	1	1	1	1803607-3	DOCUMENTATION PACKAGE	71
-	1	1	1	1	2119740-1	TAG,IDENTIFICATION	67
-	2	2	2	2	2168078-1	SCREW, DRIVE, RH, RoHS, 2 x .188	66
-	1	1	1	1	2168083-2	SCR, SKT HD CAP, RoHS, M4 X 8.0	60
-	1	1	1	1	5-18022-5	SCR, HEX HD CAP, M4 X 6.0	59
-	1	1	1	1	1338685-1	PAWL, FEED	56
-	4	4	4	4	2168083-3	SCR, SKT HD CAP, RoHS, M4 X 12.0	54
-	2	2	2	2	1-2168083-0	SCR, SKT HD CAP, RoHS, M4 X 10	53
-	1	1	1	1	1803382-6	HOLD DOWN, SPRING LOADED	50
-	1	2	1	2	18023-9	SCR, SKT HD CAP M4 X 6.0	49
-	-	1	-	1	2119652-1	FEED CAM, PRE FEED	48
-	-	1	-	1	2119653-1	FEED CAM, POST FEED	47
-	1	1	1	1	1803583-9	APPLICATOR BASIC ASSEMBLY, SF	46
-	1	1	1	1	1803515-1	RAM ASSEMBLY, SF ATLANTIC	44
-	1	1	1	1	1803602-1	SCR, BHSC, RoHS (M8 X 25)	41
-	1	1	1	1	1-1752356-9	SUPPORT, TERMINAL	34
-	2	2	2	2	2079383-5	SCR, BHSC, RoHS (M4 X 20)	33
-	2	2	2	2	2-2844962-4	SPACER, CYLINDRICAL, STRIP GUIDE	30
-	1	1	1	1	2844992-1	ASSEMBLY, STRIP GUIDE	29
-	1	1	1	1	1-455888-0	SPACER, CRIMPER	28
-	1	1	1	1	1320928-2	STRIP GUIDE	24
-	1	1	1	1	2168083-2	SCR, SKT HD CAP, RoHS, M4 X 8.0	21
-	1	1	1	1	1-18028-2	WASHER, FLAT, REG M4	20
-	1	1	1	1	2119533-1	STRIPPER, SIDE FEED	19
(1) -	1	1	1	1	2119806-1	INSERT, SHEAR	13
-	1	1	1	1	3-22280-3	SPRING, COMPRESSION	12
-	1	1	1	1	1-356885-4	STOP, SHEAR	11
(1) -	1	1	1	1	2119805-1	SHEAR HOLDER, FRONT	10
(1) -	1	1	1	1	1803095-1	FLOATING SHEAR, FRONT -	9
(1) 1	2	2	1	1	3-1633129-3	ANVIL, COMBINATION .062	8
-	1	1	1	1	2119757-4	DEPRESSOR, SHEAR	5
-	1	1	1	1	1-238011-7	BLOCK, CRIMPER SPACER	4
(1) 1	2	2	1	1	1-2119582-8	CRIMPER, INSULATION F PREMIUM	3
(1) 1	2	2	1	1	4-456403-2	CRIMPER, WIRE PREMIUM	1

ATLANTIC VERSION

Shown on sheets 1 of 4 & 2 of 4
(Pacific version shown on sheets 3 of 4 & 4 of 4)

THIS DRAWING IS A CONTROLLED DOCUMENT FOR TYCO ELECTRONICS CORPORATION. IT IS SUBJECT TO CHANGE. CONTACT THE ISSUING ORGANIZATION SHOULD BE CONTACTED FOR THE LATEST REVISION.

DIMENSIONS: mm

TOLERANCES UNLESS OTHERWISE SPECIFIED:
0 PLC ±
1 PLC ±
2 PLC ±
3 PLC ±
4 PLC ±
ANGLES ±

MATERIAL - -
FINISH - -

DWN K. STAKEM 11OCT2011
CHK G. BAILEY 11OCT2011
APVD T. ELBIN 11OCT2011
PRODUCT SPEC -
APPLICATION SPEC -
WEIGHT -

TE Connectivity
Harrisburg, PA 17105-3608

NAME Ocean Side Feed Applicator -

SIZE	CAGE CODE	DRAWING NO	RESTRICTED TO
A1	00779	C-2151015	

CUSTOMER ACCESSIBLE PRODUCTION DRAWING | SCALE 1:2 | SHEET 1 OF 4 | REV C

SHEETS 3 & 4 ARE NOT REQUIRED FOR ATLANTIC VERSION

AMP 4805 REV 31MARZ000

Pro/ENGINEER DRAWING

THIS DRAWING IS UNPUBLISHED. RELEASED FOR PUBLICATION 20
© COPYRIGHT 20 BY TYCO ELECTRONICS CORPORATION. ALL RIGHTS RESERVED.

LOC	DIST
A	66

REVISIONS

P	LTR	DESCRIPTION	DATE	DWN	APVD
	-	SEE SHEET 1	-	-	-

FEED TYPE MECHANICAL

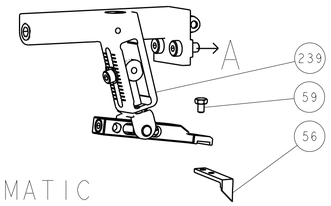

PNEUMATIC

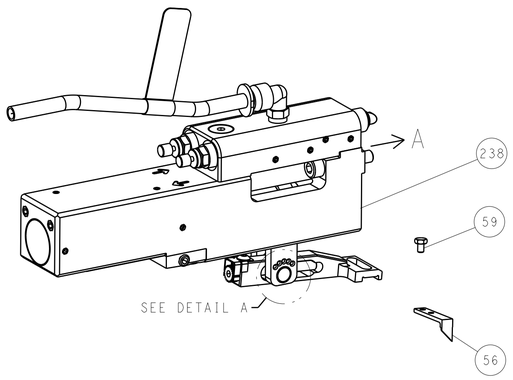

FEED SPRING SETTING POSITION
(SHOWN FROM REAR SIDE)

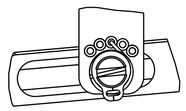

DETAIL A

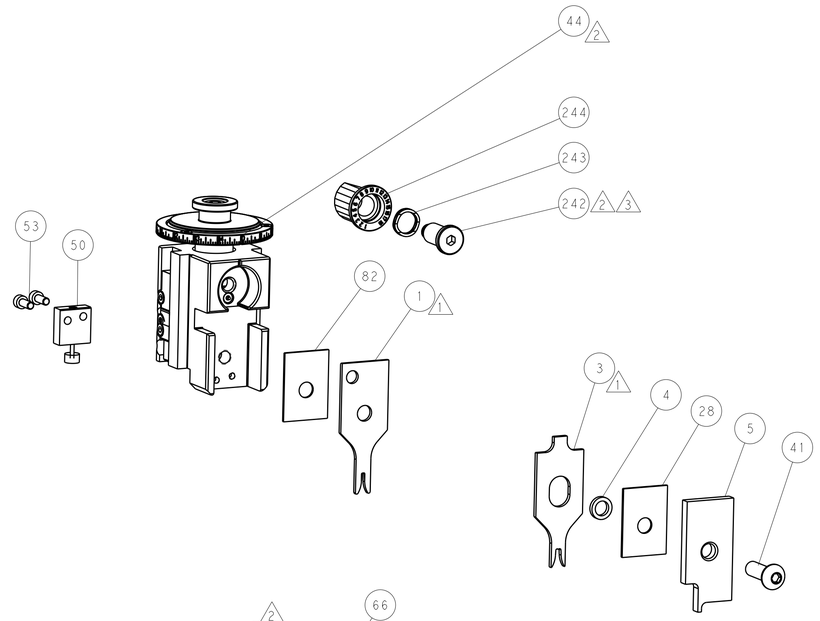

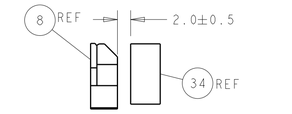

TERMINAL SUPPORT LOCATION

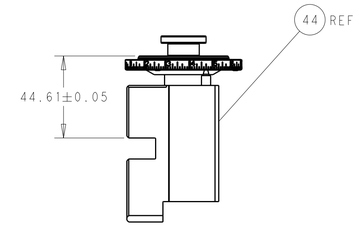

RAM SET-UP

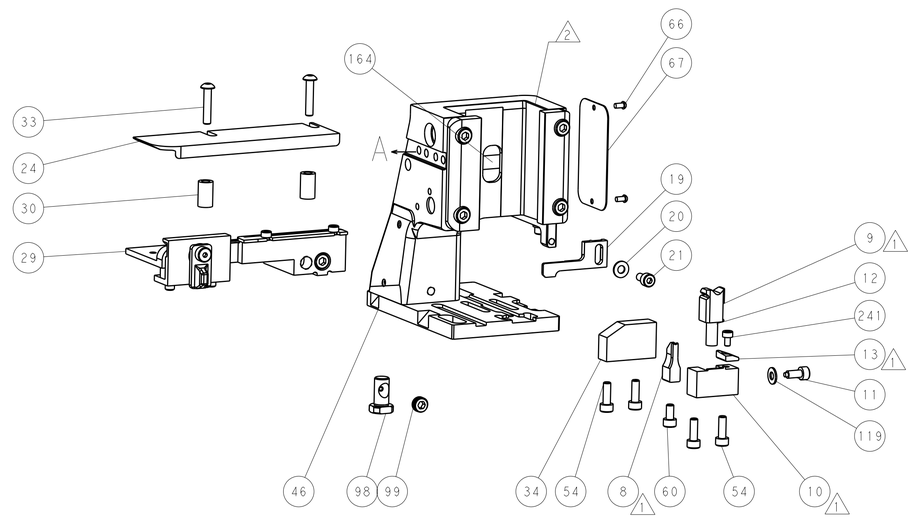

ITEM 30 LOCATED AT
FRONT HOLES

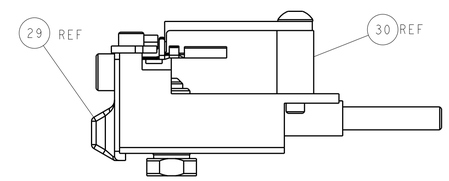

FEED TRACK POSITION
GUIDE BY INSULATION BARREL

CAM POSITIONS

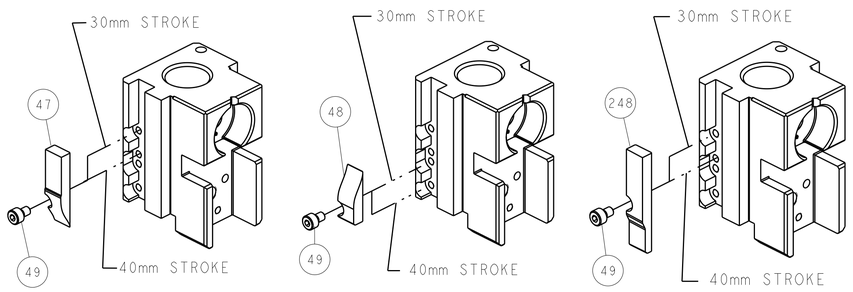

MECHANICAL
POST FEED

MECHANICAL
PRE FEED

AIR FEED

ATLANTIC VERSION

Shown on sheets 1 of 4 & 2 of 4
(Pacific version shown on sheets 3 of 4 & 4 of 4)

THIS DRAWING IS A CONTROLLED DOCUMENT FOR TYCO ELECTRONICS CORPORATION. IT IS SUBJECT TO CHANGE AND THE CONTROLLING ENGINEERING ORGANIZATION SHOULD BE CONTACTED FOR THE LATEST REVISION.

DIMENSIONS: mm

TOLERANCES UNLESS OTHERWISE SPECIFIED:
0 PLC ±
1 PLC ±
2 PLC ±
3 PLC ±
4 PLC ±
ANGLES ±

MATERIAL - -
FINISH - -

DWN K. STAKEM 11OCT2011
CHK G. BAILEY 11OCT2011
APVD T. ELBIN 11OCT2011

PRODUCT SPEC -
APPLICATION SPEC -
WEIGHT -

TE Connectivity
Harrisburg, PA 17105-3608

NAME Ocean Side Feed Applicator -

SIZE A1 | CAGE CODE 00779 | DRAWING NO C-2151015 | RESTRICTED TO

CUSTOMER ACCESSIBLE PRODUCTION DRAWING | SCALE 1:2 | SHEET 2 OF 4 | REV C

AMP 4805 REV 31MAR2000

SHEETS 3 & 4 ARE NOT REQUIRED FOR ATLANTIC VERSION

THIS DRAWING IS UNPUBLISHED. RELEASED FOR PUBLICATION 20
© COPYRIGHT 20 BY TYCO ELECTRONICS CORPORATION. ALL RIGHTS RESERVED.

LOC	DIST
A	66

REVISIONS

P	LTR	DESCRIPTION	DATE	DWN	APVD
	-	SEE SHEET 1	-	-	-

PART NUMBER	REVISION	DESCRIPTION	FEED TYPE
2-2151015-1	B	FINE CRIMP HEIGHT ADJUST	MECHANICAL
2-2151015-2	C	FINE CRIMP HEIGHT ADJUST	PNEUMATIC
7-2151015-7	A	CRIMP TOOLING KIT	-

PACIFIC VERSION TERMINATOR INTERFACE ADAPTER

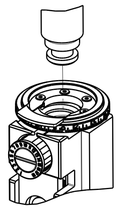

APPLICATOR DATA		
CRIMP	SIZE	TYPE
WIRE	1.58 mm [.062]	F
INSUL	3.18 mm [.125]	F
APPLICATOR INSTRUCTIONS 408-35042		

TERMINAL DATA: MOLEX TERMINAL MOLEX CRIMP SPECIFICATION

TERMINAL NAME: 4.2mm PITCH MINI-FIT TERMINAL

WIRE STRIP LENGTH	INSULATION DIAMETER RANGE
3.00-3.50 mm [.118-.138 IN]	∅ 2.50-2.95 mm [.098-.116 IN]

TERMINAL APPLICATION SPECIFICATION: MOLEX 63900-2600 REV J

TERMINALS APPLIED

TE TERMINAL	MOLEX TERMINAL	TE TERMINAL	MOLEX TERMINAL
286603-1	39-00-0038	286611-1	39-00-0040
286603-2	39-00-0055	286611-2	39-00-0061
286603-3	39-00-0207	286611-3	39-00-0053
286603-4	39-00-0163	286611-4	39-00-0120
286603-5	39-00-0059	286611-5	39-00-0126
286603-6	39-00-0153	286611-6	39-00-0219
286603-7	39-00-0181	286611-8	39-00-0411
286603-8	39-00-0213	286611-9	39-00-0430
1-286603-0	44485-1211	1-286611-1	39-00-0121
1-286603-1	39-00-0114	1-286611-2	39-00-0420
1-286603-2	39-00-0428	1-286611-3	39-00-0437
1-286603-3	39-00-0419	1-286611-4	39-00-0426
1-286603-4	39-00-0425	1-286611-6	39-00-0075
1-286603-5	39-00-0436	1-286611-7	39-00-0427
1-286603-6	39-00-0440	1-286611-8	40-13-0853
1-286603-7	39-00-0073	2-286611-0	30490-1002
1-286603-8	39-00-0108	2-286611-1	30490-2002
1-286603-9	39-00-0169	2-286611-2	40-01-0853
2-286603-0	39-00-0175	2-286611-3	98-00-0174
2-286603-1	39-00-0194	2-286611-4	30490-0002
2-286603-2	39-00-0200		
2-286603-3	39-00-0405		
2-286603-4	39-00-0407		
2-286603-5	39-00-0410		
2-286603-6	40-13-0851		
2-286603-8	44485-1311		
2-286603-9	44485-1411		

WIRE SIZE	CRIMP HEIGHT mm [INCH]	CRIMP HEIGHT 4 REFERENCE SETTING
0.80mm2	1.02+/-0.05 [.040+/-.002]	5.9
18 AWG	1.02+/-0.05 [.040+/-.002]	5.9
0.50mm2	0.995+/-0.045 [.039+/-.0018]	6.2
20 AWG	0.995+/-0.045 [.039+/-.0018]	6.2
0.35mm2	0.895+/-0.045 [.035+/-.0018]	7.1
22 AWG	0.895+/-0.045 [.035+/-.0018]	7.1
0.20mm2	0.83+/-0.04 [.033+/-.0016]	7.7
24 AWG	0.83+/-0.04 [.033+/-.0016]	7.7

TERMINAL DATA: MOLEX TERMINAL CMOLEX CRIMP SPECIFICATION

TERMINAL NAME: 4.2mm PITCH MINI-FIT TERMINAL

WIRE STRIP LENGTH	INSULATION DIAMETER RANGE
3.00-3.50 mm [.118-.138 IN]	∅2.50-2.95 mm [.098-.116 IN]

TERMINAL APPLICATION SPECIFICATION: MOLEX 63900-2600 REV J

TERMINALS APPLIED

TE TERMINAL	MOLEX TERMINAL	TE TERMINAL	MOLEX TERMINAL
286603-9	44476-1111	1-2113022-1	46083-1211
2-286603-7	44476-1211	1-2113022-2	46083-1221
286611-7	44478-1111	1-2113022-3	46134-1111
1-286611-9	44478-1211	1-2113022-4	46134-1121
2113022-1	45750-1211	1-2113022-5	46134-1211
2113022-2	45750-1111	1-2113022-6	46134-1221
2113022-3	46012-1111		
2113022-4	46018-1541		
2113022-5	46083-1111		
2113022-6	46098-1541		
2113022-7	46012-1141		
2113022-8	46012-1211		
2113022-9	46012-1241		
1-2113022-0	46083-1121		

WIRE SIZE	CRIMP HEIGHT mm [INCH]	CRIMP HEIGHT 4 REFERENCE SETTING
0.80mm2	1.02+/-0.05 [.040+/-.002]	5.9
18 AWG	1.02+/-0.05 [.040+/-.002]	5.9
0.50mm2	0.995+/-0.045 [.039+/-.0018]	6.2
20 AWG	0.995+/-0.045 [.039+/-.0018]	6.2

*WARNING
ON INSTALLATION, SET WIRE DISC TO CRIMP HEIGHT REFERENCE SETTING FOR LARGEST WIRE SIZE. CRIMP HEIGHT REFERENCE SETTINGS GREATER THAN THE VALUE SHOWN MAY CAUSE DAMAGE TO THE CRIMP TOOLING, REFER TO THE INSTRUCTION SHEET FOR PROPER SETUP AND ADJUSTMENTS.

1. RECOMMENDED SPARE PARTS
2. REFER TO SUPPLIED INSTRUCTION SHEET FOR CLEANING, LUBRICATION AND STORAGE OF APPLICATOR.
3. APPLY PART NUMBER 2-23419-6 LOCTITE TO THREADS OF ITEM 242.
4. CRIMP HEIGHT REFERENCE SETTING WAS THE SETTING USED WHEN THE APPLICATOR WAS QUALIFIED AT THE FACTORY. ADJUSTMENT MAY BE NECESSARY WHEN RUNNING APPLICATOR IN THE FIELD.
5. UNLESS SPECIFIED OTHERWISE TORQUE VALUES SHALL BE USED PER DOCUMENT, 101-35000.

-	1	1	2119082-9	CAM, SNAIL, INSULATION ADJUSTMENT	244
-	1	1	2079764-1	WASHER, WAVE SPRING, CREST-TO-CREST	243
3 -	1	1	2119083-1	RETAINER, INSULATION DIAL	242
-	1	1	18023-1	SCR, SKT HD CAP M3 X 5.0	241
-	-	1	2119580-1	MECHANICAL FEED ASSEMBLY	239
-	1	-	2844940-1	AIR FEED MODULE	238
-	REF	REF	994970-2	COUNTER, MAGNETIC	164
-	1	-	2119641-2	FEED CAM, AIR FEED	151
-	1	1	2168083-8	SCR, SKT HD CAP, RoHS, M4 X 16	144
-	4	4	2168083-9	SCR, SKT HD CAP, RoHS, M4 X 20	143
-	-	1	2119653-2	FEED CAM, POST FEED	142
-	1	1	1-1803583-0	APPLICATOR BASIC ASSEMBLY, SF	141
-	1	1	1803516-1	RAM ASSEMBLY, SF PACIFIC	140
-	1	1	1-18028-2	WASHER, FLAT, REG M4	119
-	1	1	2844908-1	SCREW, LOCKING	99
-	1	1	2844907-1	POST, LOCKING	98
-	1	1	455888-9	SPACER, CRIMPER	82
-	1	1	1803607-3	DOCUMENTATION PACKAGE	71
-	1	1	2119740-1	TAG,IDENTIFICATION	67
-	2	2	2168078-1	SCREW, DRIVE, RH, RoHS, 2 x .188	66
-	1	1	5-18022-5	SCR, HEX HD CAP, M4 X 6.0	59
-	1	1	1338685-1	PAWL, FEED	56
-	2	2	1-2168083-0	SCR, SKT HD CAP, RoHS, M4 X 10	53
-	1	1	1803382-6	HOLD DOWN, SPRING LOADED	50
-	1	2	18023-9	SCR, SKT HD CAP M4 X 6.0	49
-	-	1	2119652-1	FEED CAM, PRE FEED	48
-	1	1	1803602-1	SCR, BHSC, RoHS (M8 X 25)	41
-	1	1	1-1752356-9	SUPPORT, TERMINAL	34
-	2	2	2079383-5	SCR, BHSC, RoHS (M4 X 20)	33
-	2	2	2-2844962-4	SPACER, CYLINDRICAL, STRIP GUIDE	30
-	1	1	2844992-1	ASSEMBLY, STRIP GUIDE	29
-	1	1	1-455888-0	SPACER, CRIMPER	28
-	1	1	1320928-2	STRIP GUIDE	24
-	1	1	2168083-2	SCR, SKT HD CAP, RoHS, M4 X 8.0	21
-	1	1	1-18028-2	WASHER, FLAT, REG M4	20
-	1	1	2119533-1	STRIPPER, SIDE FEED	19
1 -	1	1	2119806-1	INSERT, SHEAR	13
-	1	1	3-22280-3	SPRING, COMPRESSION	12
-	1	1	1-356885-4	STOP, SHEAR	11
1 -	1	1	2119805-1	SHEAR HOLDER, FRONT	10
1 -	1	1	1803095-1	FLOATING SHEAR, FRONT -	9
1 1	1	1	3-1633129-3	ANVIL, COMBINATION .062	8
-	1	1	2119757-4	DEPRESSOR, SHEAR	5
-	1	1	1-238011-7	BLOCK, CRIMPER SPACER	4
1 1	1	1	1-2119582-8	CRIMPER, INSULATION F PREMIUM	3
1 1	1	1	4-456403-2	CRIMPER, WIRE PREMIUM	1
	-77	-22 -21	PART NO	DESCRIPTION	ITEM NO

PACIFIC VERSION
Shown on sheets 3 of 4 & 4 of 4
(Atlantic version shown on sheets 1 of 4 & 2 of 4)

THIS DRAWING IS A CONFIDENTIAL DOCUMENT OF TYCO ELECTRONICS CORPORATION IT IS SUBJECT TO CHANGE AND THE CONTROLLING ENGINEERING ORGANIZATION SHOULD BE CONTACTED FOR THE LATEST REVISION.

DWN	K. STAKEM	11OCT2011
CHK	G. BAILEY	11OCT2011
APVD	T. ELBIN	11OCT2011

DIMENSIONS: mm

TOLERANCES UNLESS OTHERWISE SPECIFIED:
0 PLC ±
1 PLC ±
2 PLC ±
3 PLC ±
4 PLC ±
ANGLES ±

MATERIAL - -
FINISH - -

PRODUCT SPEC -
APPLICATION SPEC -
WEIGHT -

TE Connectivity
Harrisburg, PA 17105-3608

NAME: Ocean Side Feed Applicator -

SIZE	CAGE CODE	DRAWING NO	RESTRICTED TO
A1	00779	C-2151015	

CUSTOMER ACCESSIBLE PRODUCTION DRAWING | SCALE 1:2 | SHEET 3 OF 4 | REV C

AMP 4805 REV 31MAR2000

SHEETS 1 & 2 ARE NOT REQUIRED FOR PACIFIC VERSION

THIS DRAWING IS UNPUBLISHED. RELEASED FOR PUBLICATION 20
© COPYRIGHT 20 BY TYCO ELECTRONICS CORPORATION. ALL RIGHTS RESERVED.

LOC	DIST
A	66

REVISIONS

P	LTR	DESCRIPTION	DATE	DWN	APVD
	-	SEE SHEET 1	-	-	-

FEED TYPE

MECHANICAL

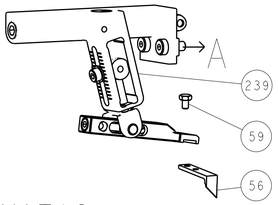

PNEUMATIC

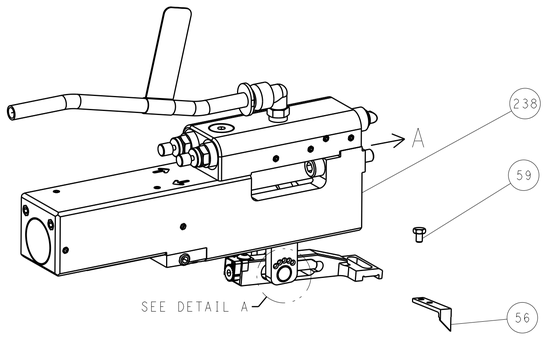

FEED SPRING SETTING POSITION
(SHOWN FROM REAR SIDE)

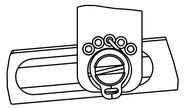

DETAIL A

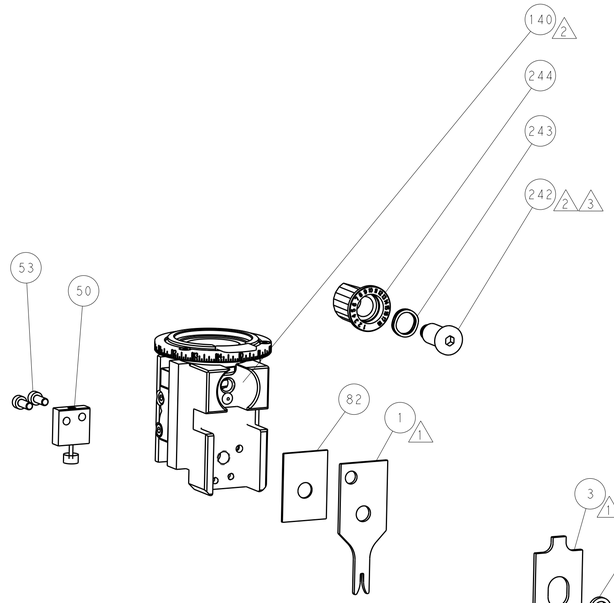

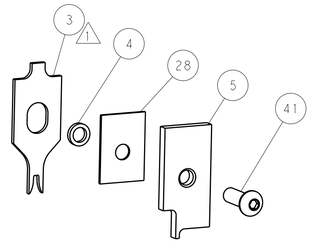

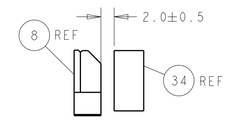

TERMINAL SUPPORT LOCATION

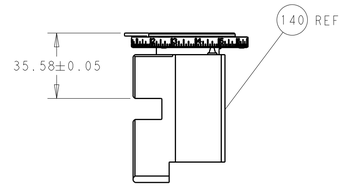

RAM SET-UP

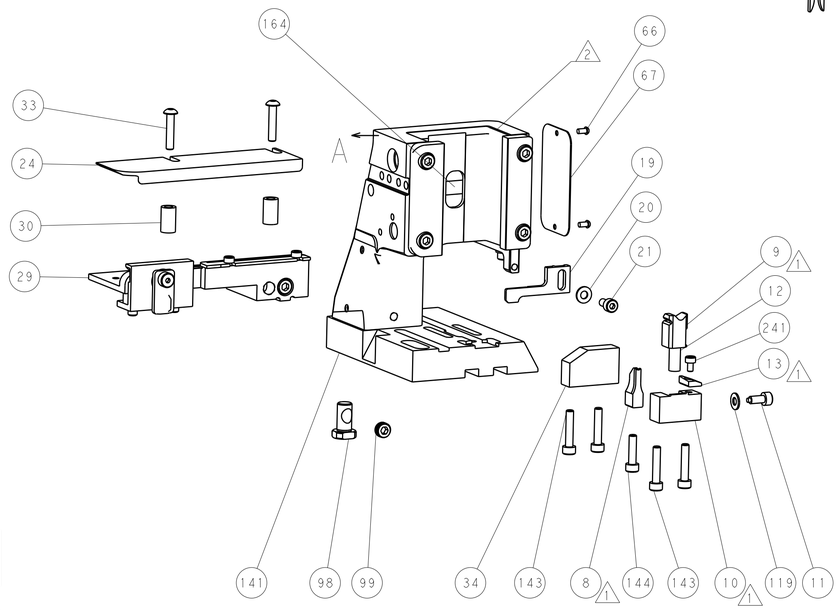

ITEM 30 LOCATED AT
FRONT HOLES

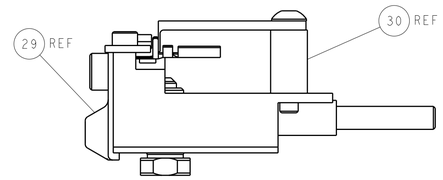

FEED TRACK POSITION
GUIDE BY INSULATION BARREL

CAM POSITIONS

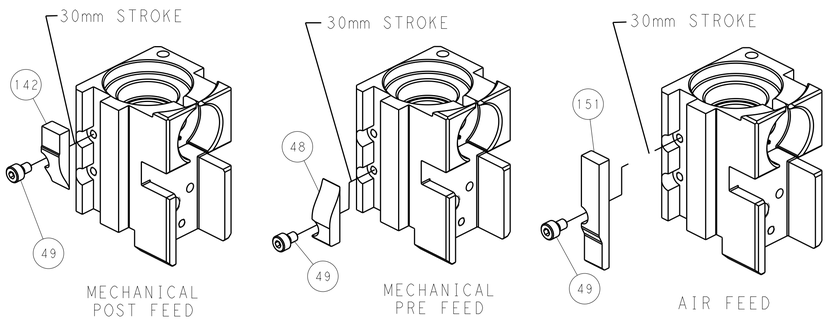

MECHANICAL POST FEED

MECHANICAL PRE FEED

AIR FEED

PACIFIC VERSION

Shown on sheets 3 of 4 & 4 of 4
(Atlantic version shown on sheets 1 of 4 & 2 of 4)

THIS DRAWING IS A CONTROLLED DOCUMENT FOR TYCO ELECTRONICS CORPORATION. IT IS SUBJECT TO CHANGE AND THE CONTROLLING ENGINEERING ORGANIZATION SHOULD BE CONTACTED FOR THE LATEST REVISION.

DWN	K. STAKEM	11OCT2011
CHK	G. BAILEY	11OCT2011
APVD	T. ELBIN	11OCT2011

DIMENSIONS: mm

TOLERANCES UNLESS OTHERWISE SPECIFIED:
0 PLC ±
1 PLC ±
2 PLC ±
3 PLC ±
4 PLC ±
ANGLES ±

MATERIAL - -
FINISH - -

PRODUCT SPEC -
APPLICATION SPEC -
WEIGHT -

TE Connectivity
Harrisburg, PA 17105-3608

NAME Ocean Side Feed Applicator -

SIZE	CAGE CODE	DRAWING NO	RESTRICTED TO
A1	00779	C-2151015	

CUSTOMER ACCESSIBLE PRODUCTION DRAWING | SCALE 1:2 | SHEET 4 OF 4 | REV C

AMP 4805 REV 31MAR2000

SHEETS 1 & 2 ARE NOT REQUIRED FOR PACIFIC VERSION

Mouser Electronics

Authorized Distributor

Click to View Pricing, Inventory, Delivery & Lifecycle Information:

TE Connectivity:

2151015-2